SANDIA REPORT
SAND2017-6925
Unlimited Release
July 2017

Recommended Practices for Abuse Testing Rechargeable Energy Storage Systems (RESSs)

Christopher J. Orendorff, Joshua Lamb, and Leigh Anna M. Steele

Prepared by
Sandia National Laboratories
Albuquerque, New Mexico 87185 and Livermore, California 94550

Sandia National Laboratories is a multimission laboratory managed and operated by National Technology and Engineering Solutions of Sandia, LLC, a wholly owned subsidiary of Honeywell International, Inc., for the U.S. Department of Energy's National Nuclear Security Administration under contract DE-NA0003525.

Approved for public release; further dissemination unlimited.

Sandia National Laboratories

Issued by Sandia National Laboratories, operated for the United States Department of Energy by National Technology and Engineering Solutions of Sandia, LLC.

NOTICE: This report was prepared as an account of work sponsored by an agency of the United States Government. Neither the United States Government, nor any agency thereof, nor any of their employees, nor any of their contractors, subcontractors, or their employees, make any warranty, express or implied, or assume any legal liability or responsibility for the accuracy, completeness, or usefulness of any information, apparatus, product, or process disclosed, or represent that its use would not infringe privately owned rights. Reference herein to any specific commercial product, process, or service by trade name, trademark, manufacturer, or otherwise, does not necessarily constitute or imply its endorsement, recommendation, or favoring by the United States Government, any agency thereof, or any of their contractors or subcontractors. The views and opinions expressed herein do not necessarily state or reflect those of the United States Government, any agency thereof, or any of their contractors.

Printed in the United States of America. This report has been reproduced directly from the best available copy.

Available to DOE and DOE contractors from
U.S. Department of Energy
Office of Scientific and Technical Information
P.O. Box 62
Oak Ridge, TN 37831

Telephone: (865) 576-8401
Facsimile: (865) 576-5728
E-Mail: reports@adonis.osti.gov
Online ordering: http://www.osti.gov/bridge

Available to the public from
U.S. Department of Commerce
National Technical Information Service
5285 Port Royal Rd.
Springfield, VA 22161

Telephone: (800) 553-6847
Facsimile: (703) 605-6900
E-Mail: orders@ntis.fedworld.gov
Online order: http://www.ntis.gov/help/ordermethods.asp?loc=7-4-0#online

SAND2017-6925
Unlimited Release
July 2017

Recommended Practices for Abuse Testing Rechargeable Energy Storage Systems (RESSs)

Christopher J. Orendorff, Joshua Lamb and Leigh Anna M. Steele

Power Sources Research and Development Department

Sandia National Laboratories
P.O. Box 5800
Albuquerque, New Mexico 87185-0613

Abstract

This report describes recommended abuse testing procedures for rechargeable energy storage systems (RESSs) for electric vehicles. This report serves as a revision to the FreedomCAR Electrical Energy Storage System Abuse Test Manual for Electric and Hybrid Electric Vehicle Applications (SAND2005-3123).

ACKNOWLEDGMENTS

The authors gratefully acknowledge Daniel Doughty and Chris Crafts, the authors of the previous version of this abuse testing manual, who provided the documented foundation for this manual. We also thank Peter Roth for his contributions to this report from his years of testing experience, data generated from that work, and the fundamental understanding of energy storage system failures he developed. The authors also acknowledge technical contributions made by Scott Spangler, Jill Langendorf, Loraine Torres-Castro, June Stanley, Chris Grosso, and Jerry Quintana to each of the testing procedures. We thank our colleagues in the energy storage community for their critical review and contributions to improve the content of this document.

CONTENTS

Contents 5

1. Introduction.....8
   1.1. Scope.....8
   1.2. Safety Basis 8
   1.3. Definitions 9

2. Technical Requirements 13
   2.1. General Test Conditions 13
      2.1.1. Level of Assembly 14
      2.1.2. System Age 14
      2.1.3. State of Charge 14
      2.1.4. Temperature 14
      2.1.5. Test Duration.....14
      2.1.6. Measured Data.....15
      2.1.7. Measurement Accuracy.....16
      2.1.8. Hazard Severity Levels and Descriptions 16
   2.2. Hazardous Substance Monitoring.....18
   2.3. Flammability Analysis.....18

3. Recommended Core Test Procedures.....19
   3.1. Mechanical Abuse Tests 19
      3.1.1. Controlled Crush 19
      3.1.2. Penetration.....24
   3.2. Thermal Abuse Tests 25
      3.2.1. Thermal Ramp.....25
      3.2.2. Accelerating Rate Calorimetry (ARC).....26
   3.3. Electrical Abuse Tests 27
      3.3.1. Overcharge 27
      3.3.2. Overvoltage (for electrochemical capacitors) 28
      3.3.3. Overdischarge.....29
      3.3.4. Voltage Reversal 29
      3.3.5. External Short Circuit.....30
   3.4. Failure Propagation Test.....31

4. Supplemental Test Procedures.....33
   4.1. Cell Vent Flammability Test 33
   4.2. Shutdown Separator Integrity 34
   4.4. Water Immersion 35
   4.5. Fuel Fire.....35
   4.6. Simulated Fuel Fire.....36

5. Post-Test Considerations 37

6. References.....38

Appendix A: Examples of Hazard Severity Level Reporting 39

Distribution 40

FIGURES

Figure 1. Drawing of a prismatic cell showing the x-, y-, and z-orientations. 21
Figure 2. Drawing of a prismatic cell in a constraint fixture to be crushed in the z-orientation ...21
Figure 3. Drawing of the impactor used for controlled crush testing prismatic or pouch cells in the y- and z-orientations. 22
Figure 4. Drawing of the semi-cylindrical impactor plate for module/pack crush testing 23
Figure 5. Enclosure around a cell to provide a defined vent path 33

TABLES

Table 1. Risk Matrix Example[4] 9
Table 2. Recommended Tests and Preferred Number of Test Articles 13
Table 3. Recommended Measurements and Accuracies 16
Table 4. Hazard Severity Level (HSL) Rating Table 17
Table 5. Recommended Impactor Diameter and Cell Size Matrix 19
Table 6. Recommended Impactor Diameter and Cell Width Matrix 20
Table 7. Test Matrix for the Penetration Test 25
Table 8. Cell and Module-level Overcharge Test Matrix 27
Table 9. Cell and Module Short Circuit Resistance Matrix 30

NOMENCLATURE

AIHA	American Industrial Hygiene Association
ARC	accelerated rate calorimeter or accelerating rate calorimetry
BOL	beginning of life
CVR	current viewing resistor
DOD	depth of discharge
DOE	Department of Energy
EOL	end of life
EPA	Environmental Protection Agency
ERPG-2	Emergency Response Planning Guidelines – Level 2.
EUCAR	European Council for Automotive Research & Development
EV	electric vehicle
FMEA	failure modes and effects analysis
FTA	fault tree analysis
HEV	hybrid electric vehicle
HSL	hazard severity level
ICE	internal combustion engine
INL	Idaho National Laboratory
OCV	open circuit voltage
PHEV	plug-in hybrid electric vehicle
RESS	rechargeable energy storage system
SAE	Society of Automotive Engineers
SNL	Sandia National Laboratories
SOC	state of charge
TLV	Threshold Limit Value

1. INTRODUCTION

This document represents a revision to the FreedomCAR Electric Energy Storage System Abuse Test Manual for Electric and Hybrid Electric Vehicle Applications (SAND 2005-3123).[1] This document is intended to provide recommended test procedures and practices. The content in this document is based on empirical testing results and data relevant to the end use

1.1. Scope

This manual defines abuse tests for rechargeable energy storage systems (RESSs) for electric vehicle applications (EV, PHEV, or HEV) to evaluate the response of RESS technologies to conditions or events that are outside of normal use. Such conditions or events are often referred to as abuse conditions. The intent of the tests in this manual is to understand abuse tolerance and potential vulnerabilities of an RESS early in the development process. This information can be used by manufacturers to design and/or implement the necessary hazard mitigations for a given failure mode. The intent of this manual is not to define acceptance criteria. Specifically, the prescription of specific test plans, step-by-step instructions on executing tests, and pass/fail criteria are outside the scope of this document.

1.2. Safety Basis

Abuse testing may result in energetic destruction of devices under test (DUTs) and should only be undertaken by trained personnel in appropriate facilities. Before testing, the responsible testing organization should consult the device manufacturer for information regarding the possible consequences of such failures, including the potential release of hazardous substances, so that appropriate precautions are taken to minimize the safety risk to testing personnel, other co-located workers, facility infrastructure, and environmental impact. Testing organizations should follow local safety basis procedures for analyzing and mitigating hazards associated with RESS testing. Generally, a Fault Tree Analysis (FTA) or Failure Modes and Effects Analysis (FMEA) should be performed by experienced personnel and the hazards identified to allow for proper mitigation.[2,3] The risks could be analyzed using a consequence/severity matrix and should be appropriately mitigated by implementing engineered or administrative controls. An example of a risk matrix table the Department of Defense Standard Practice for System Safety [4] is shown in Table 1. The risk matrix in Table 1 is intended to be an example and is not a requirement for performing testing procedures. It is also important to note that definitions of consequence and frequency (likelihood) will be institution specific and are often framed in terms of impacts to people, environment, infrastructure, test platform, monetary loss, authority level required for accepting risk, etc.

Table 1. Risk Matrix Example[4]

RISK ASSESSMENT MATRIX				
SEVERITY / PROBABILITY	Catastrophic (1)	Critical (2)	Marginal (3)	Negligible (4)
Frequent (A)	High	High	Serious	Medium
Probable (B)	High	High	Serious	Medium
Occasional (C)	High	Serious	Medium	Low
Remote (D)	Serious	Medium	Medium	Low
Improbable (E)	Medium	Medium	Medium	Low
Eliminated (F)	Eliminated			

MIL-STD-882E, Department of Defense Standard Practice: System Safety

General hazard mitigation for RESS abuse testing should be considered for each operation including (1) acceptance of an RESS, (2) test set-up, (3) execution of a test, (4) post-test handling and clean-up based on local industrial hygiene requirements. Appropriate engineering or administrative controls to mitigate hazards will depend on the operation, RESS, and the testing facility. Examples of engineering controls may include physical separation of workers from a RESS, robust facility infrastructure, fire protection, local exhaust ventilation (LEV) to dissipate potential toxic gases, real-time monitoring and analysis, and personal protective equipment (PPE) including but not limited to respiratory protection, Tyvek coveralls, gloves, and/or safety glasses. Examples of administrative controls may include approved procedures, training, signage, barriers, checklists, and other operator aids.

1.3. Definitions

Active Protection Device — Safety device that consists of a sensor and actuator and is intended for protection from or mitigation of abusive, out-of range conditions experienced by the DUT.

Ambient Temperature — The ambient temperature may include both climate controlled and uncontrolled or outdoor testing. A reasonable ambient temperature range should be 10-30 °C.

Capacity	The charge measured in amp-hours (Ah) of a RESS from the fully charged (100% SOC) to the fully discharged state (0% SOC) using the discharge profile as specified by the manufacturer.
Cell	An assembly of at least one positive electrode, one negative electrode, and other necessary electrochemical and structural components. A cell is a self-contained energy storage device whose function is to deliver electrical energy to an external circuit.
Device Under Test (DUT)	A general term used to describe the RESS device being tested. This term includes all levels of integration of the test article and can refer to a single unit (cell), a multiple unit assembly (module or pack), or a complete system.
ERPG-2	Emergency Response Planning Guidelines levels are defined as the maximum airborne concentration below which it is believed that nearly all individuals could be exposed for up to 1 h without experiencing or developing irreversible or other serious health effects or symptoms which could impair an individual's ability to take protective action. This guideline is taken from the American Industrial Hygiene Association (http://www.aiha.org/Content).
Energetic Failure	Fast release of energy sufficient to cause pressure waves (slower than the speed of sound) and/or projectiles that may cause structural and/or bodily damage, depending on the size of the RESS. The kinetic energy of flying debris from the RESS may be sufficient to cause damage as well.
Fire or Flame	Ignition and sustained combustion of flammable gas or liquid (approximately more than one second). Sparks are not flames.
Flammable Gas	A gas that burns in air when present in concentrations that are above the lower flammability limit (LFL) and below the upper flammability limit (UFL).
Fully Charged	The condition reached by a device when it is subjected to the manufacturer's recommended recharge algorithm. In this manual, a device is considered "fully charged" at 100% SOC.
Fully Discharged	The condition reached by a device when it is subjected to the manufacturer's recommended discharge algorithm. In this manual, a device is typically considered "fully discharged" at 0% SOC.
Integrator	For the purposes of this manual, the integrator is the vehicle manufacturer or vendor who installs the RESS for use in an EV, PHEV, or HEV

Leak	Loss of hermeticity of the RESS cell container leading to slow escape of gas or liquid without actuation of a designed vent.
LFL	Lower flammability limit. A minimum concentration where a flammable gas mixture can ignite in air at a given temperature and pressure.
Module	A grouping of interconnected cells in series and/or parallel arrangement into a single mechanical and electrical unit.
Overcharge	Supplying current to the RESS exceeding the fully charged state (100% SOC) as specified by the manufacturer.
OSHA	Occupational Safety and Health Administration, part of U.S. Department of Labor. See http://www.osha.gov/.
Over Current Protection Device	A fuse, circuit breaker, intelligent contactor, or other device (e.g. positive thermal coefficient (PTC) or current interrupt device (CID)) placed in an electrical circuit to provide current overload protection.
Overdischarge	Forced discharge beyond the manufacturer's recommended limits that may lead to voltage reversal. See reversal.
Pack	Interconnected modules including all ancillary subsystems for mechanical support, thermal management, electronic components, and control hardware (if included).
Passive Protection Device	Safety device that is intended for protection from or mitigation of abusive, out-of range conditions experienced by the RESS that does not require active controls or electrical energy supply (e.g., shutdown separator).
Reversal	Forced discharge (overdischarge) of a RESS to the point that the cell's electrical terminals change polarity.
RESS	Rechargeable Energy Storage System. Any energy storage system that has the capability to be charged and discharged (e.g. batteries, capacitors).
Rupture	Loss of mechanical integrity of the RESS container, resulting in release of contents. The kinetic energy of released material is not sufficient to cause physical damage external to the RESS.

State of Charge (SOC)	An estimate of the device charge capability expressed as a percentage of the BOL rated or operating capacity and typically reached by obtaining specified voltages.
Test Article	See 'Device Under Test.'
Thermal Runaway	The uncontrolled increase in the temperature of a RESS driven by internal exothermic processes.
TLV	Threshold limit value. The concentration of a chemical at which a worker can be exposed to day after day without experiencing any acute or chronic health effects. TLV is defined by the American Industrial Hygiene Association (AIHA).
UFL	Upper flammability limit. A maximum concentration where a flammable gas mixture can ignite in air at a given temperature and pressure
Venting	The release of excessive internal pressure from a RESS cell, module or pack in a manner intended by design to preclude a rupture or explosion failure.

2. TECHNICAL REQUIREMENTS

2.1. General Test Conditions

The test profiles are divided into three categories: mechanical, thermal, and electrical. Some of the tests are not applicable to all candidate technologies. As noted above, many of the tests may result in intentional destruction of the device under test (DUT).

Before testing begins, the testing organization, the RESS manufacturer, and (when appropriate) other development principals should cooperate in the preparation of a written test plan that lists the tests to be performed and describes in detail the test conditions and data acquisition requirements for the test series. For the test conditions described below, permutations of level of assembly, system age, SOC, temperature, numbers of tests, and numbers of test articles should be implemented at the integrator's or developer's discretion based on the most susceptible condition of the technology and resources available. Recommended test procedures and a preferred number of test articles for each test are provided in Table 2 to help guide this decision.

Appropriate safety precautions should be taken to minimize risk to affected workers, facility infrastructure, and to the environment. Refer to Section 1.2. Safety Basis for guidance on appropriate safety precautions.

Table 2. Recommended Tests and Preferred Number of Test Articles

Recommended Test	Number of test articles per level of assembly		
	Cell	Module	Pack
Controlled Crush	4	2	2
Penetration	4	2	2
Thermal Ramp[a]	4	2	
Accelerating Rate Calorimetry[b]	4		
Overcharge	4	4	2
Overvoltage[c]	4	4	2
Overdischarge	2	2	2
Voltage Reversal[d]	2	2	2
External Short Circuit	4	4	2

[a]Thermal ramp testing at the pack level is not recommended due to practical limitations of the test.
[b]Accelerating rate calorimetry at the module and pack levels is not recommended due to practical limitations of the test.
[c,d]Overvoltage and Voltage Reversal are intended for electrochemical capacitors only

2.1.1. Level of Assembly

Initial tests of a given RESS design are best conducted at the lowest level of assembly (cell, module, or pack) for which meaningful data can be gathered. The recommended level of assembly is a function of the RESS technology, the RESS design, and the specific test profile. The appropriate minimum level of assembly is included in each test profile.

2.1.2. System Age

Initial tests of a given RESS design are generally conducted using a RESS at BOL (*i.e.,* one that has not undergone cycle life testing or been extensively used). Because RESS test articles may not be available in large quantities for testing at the early stages of the design process, slightly used test articles are permissible. It may be desirable to perform additional testing for a given design that evaluates a RESS or subsystem well into their service life or at EOL to understand how the tolerance to abuse conditions changes with use.

2.1.3. State of Charge

Abuse tests for all xEV RESSs (HEV, PHEV, EV) should be conducted at 100% SOC unless specifically noted otherwise. If not specified by a manufacturer, 100% SOC is defined by the cell chemistry.

2.1.4. Temperature

Except where specifically stated otherwise (e.g., elevated temperature abuse tests or when manufacturer's recommended normal operating temperature is different from ambient temperature), the ambient temperature for any test defined in this document shall be within the range of 10-30 °C (with a tolerance of ±2 °C on the defined ambient value), and the RESS environment shall be stabilized at this temperature prior to the start of testing.

2.1.5. Test Duration

The duration of each test is a trade-off between being short enough to be practical in terms of dedicating resources, data acquisition, and regular working schedules, but long enough to obtain meaningful data and to ensure safety activity-level (e.g. set-up, testing, post-test handling, and clean-up). Generally, test procedures are several seconds to 2 hours in duration with subsequent monitoring periods at the conclusion of each test which depend on the type of test and DUT size. Test procedures in excess of 4-6 hours in duration are generally considered to be too long to be practical. Numbers of test articles and tests will depend on customer requirements and resources available and should be negotiated during the development of a test plan.

At the completion of a test, post-test monitoring is a best practice that should be done at all test levels (cell, module, and pack) to ensure there is no further immediate reaction of the test article. The duration of monitoring period can vary based on the test results. In the test procedures, monitoring periods are suggested for each experiment as a guide. Longer duration wait periods (2-48 hours) to reenter a test area, to dissipate residual stored energy, or other action to ensure personnel safety may also be necessary based on local procedures or requirements.

2.1.6. Measured Data

The results of all testing should be documented in a format that allows for comparison of various RESS designs. The guidelines given below are provided as a recommendation. The testing organization should document specific data recording and analysis methods as part of an overall test plan that is reviewed and agreed upon by the RESS manufacturer (and other development principals, when appropriate) before the test begins. Because of the wide variety of test dynamics, it is difficult to specify absolute data acquisition rates. However, for all abuse tests data collection rates on the order of 1 Hz are recommended as a practical starting place. It is also recommended that the final collection rates negotiated with customers based on their requirements. The exceptions are for short circuit and mechanical tests. For short circuit tests, kHz data collection is recommended during the initial several seconds of the test where the load is first applied. For impact/drop tests, acceleration and applied force should be measured at ≥ kHz. For crush tests at even moderate travel speeds, data collection should be measured at > 1 Hz to generate useful force and displacement data.

Recommended measured data may include, but may not be limited to:

Flammability	Flammability of any solids, liquids, and gases released during any abuse test should be analyzed as described in Section 2.3. Flammability Analysis
Displacement	Level of intrusion/displacement into a RESS measured during a test (applicable to 3.1. Mechanical Abuse Tests only)
Applied Force	Applied mechanical force on a RESS will be measured during a test (applicable to 3.1. Mechanical Abuse Tests only)
Temperature	The temperature of the RESS to be recorded at several external and internal (where practical) locations as a function of time.
Pressure	Pressure resulting from a RESS measured for the duration of a test (only recommended where practical).
Voltage	RESS voltage measured between the positive and negative terminals measured as a function of time
Resistance	Resistance of the RESS case with respect to the positive and negative terminals measured before and after the test.
Impedance	Electrochemical impedance of the RESS measured as a function of time
Current	Charge/discharge current measured for the duration of the test (applicable only to tests where the DUT is under electrical load)
Video/Audio	Video and audio recorded for the duration of a test including any observation period

Photographs Still photographs of the test setup and RESS before and after the test

Mass Mass of the RESS measured before and after the test to determine any mass loss during the test

Dimensions Physical dimensions of the RESS before and after testing (applicable to Section 3.1. Mechanical Abuse Tests only)

Heat Flux Heat flux (kW/m^2) from a battery fire resulting from an abuse condition

Gas Analysis Qualitative and/or quantitative analysis of gas products evolved as a result of an abuse test

Local environmental conditions should also be noted as a best practice including ambient pressure, temperature, humidity, and exhaust rates/air exchanges of the test area. For example, relative humidity can vary significantly with geography which could impact ignition sensitivity and test results. It is important to take note of these conditions to make comparisons to other locations.

2.1.7. Measurement Accuracy

Measured data shall be acquired at rates and with accuracies adequate to ensure that the usefulness of the data is not compromised. In the absence of more specific requirements by the test sponsor, the measurement accuracies in Table 3 are acceptable. It is also important to note that the data collection rate shall be at a rate such that errors due to test dynamics will not exceed the required measurement accuracies.

Table 3. Recommended Measurements and Accuracies

Parameter	Accuracy
Temperature (°C)	±2 °C or ±5% of reading
Voltage (V)	±0.1% of reading
Current (A)	±0.1% of reading
Resistance (Ω)	±5% of reading
Displacement (mm)	±10% of reading
Applied Force (N)	±4% of reading
Mass (g)	±0.1% of reading
Heat Flux (W/m^2)	±0.3% of reading
Hazardous substance concentration (ppm)	±5% of ERPG-2 value

2.1.8. Hazard Severity Levels and Descriptions

Abuse response in this manual is scored using a modified EUCAR and SAE hazard severity level (HSL) scale adapted from SAND2005-3123 and SAE J2464.[1,5] These are provided in Table 4. This modified HSL scale, referred to as HSL, is provided with more quantifiable parameters to

provide users more resolution between hazard severity levels. Manufacturers and integrators may find it useful to consider these levels when evaluating the abuse response of a given RESS design. Since defining pass/fail criteria falls outside the scope of this manual, reporting hazard severity levels using a graded approach at defined measured parameters (e.g. temperature, SOC, force, displacement) is recommended to compare the abuse response of RESS technologies. Examples of hazard severity level reporting at measured parameters are provided in Appendix B: Examples of Hazard Severity Level Reporting.

Table 4. Hazard Severity Level (HSL) Rating Table

Hazard Severity Level	Description	Classification Criteria and Effect
0	No effect	No effect. No loss of functionality.
1	Passive protection activated	No damage or hazard; reversible loss of function. Replacement or re-setting of protection device is sufficient to restore normal functionality.
2	Defect/Damage	No hazard but damage to RESS; irreversible loss of function.
3	Minor Leakage or Minor Vent	Visual or audible evidence of leaking or venting. Leak without significant pooling or collection of free liquid. Venting without significant smoke or loss of particulate material. No visual obstruction of the RESS
4	Major Leakage or Major Vent	Visual evidence of leaking or venting. Leaking with significant pooling or observed free liquid. Venting with significant smoke, solvent vapor, and/or loss of particulate material. Visual obstruction of the RESS by vent gases and/or smoke. Total RESS mass loss < 30%.
5	Rupture	Loss of mechanical integrity of the RESS package, resulting in release of contents. The kinetic energy of released material is not sufficient to cause physical damage external to the RESS. Rupture *may* be the result of a RESS thermal runaway (but not necessarily). Total RESS mass loss 30 - 55%
6	Fire or Flame	Ignition and sustained combustion of flammable gas or liquid (≥1 s sustained fire). Sparks or incandescent material is not considered a fire or a flame.
7	Energetic Failure	Fast release of energy sufficient to cause pressure waves (slower than the speed of sound) and/or projectiles that may cause considerable structural and/or bodily damage, depending on the size of the RESS. The kinetic energy of flying debris from the RESS may be sufficient to cause damage as well. Total RESS mass loss ≥ 55%.

2.2. Hazardous Substance Monitoring

Gas, smoke and flames may be released from the test article during the abuse tests. While it is important to analyze these gases, gas analysis may not be required or desired on all tests, especially if the tests are repetitive in nature. Gas and particulate analysis may be qualitative or quantitative, depending on the test objective. Measurements of hazardous substances, when possible, should be referenced to the American Industrial Hygiene Association's (AIHA) Emergency Response Planning Guidelines – Level 2 (ERPG – 2) recommendations. Other similar standards may be substituted because the concentration levels recommended are for comparison purposes only. However, the intent of the ERPG – 2 chemical quantities are to define short term (1 hr) exposure limits which is more relevant to a RESS field failure scenario than other long term exposure standards (e.g. AIHA Threshold Limit Value (TLV) for an 8-hour work day). It is recommended that when such testing is conducted out of doors wind speed should be ≤3 mph. Multiple gas sample locations, spaced equally around the device under test, should be placed as close to the RESS as is practical during the test.

2.3. Flammability Analysis

This section describes one approach for analyzing the flammability of RESS products that can be generated during cell venting and/or thermal runaway in response to an abuse condition. A separate, but related test solely for the purposes of evaluating vent gas flammability is also described in Section 4.1. (Cell Vent Flammability Test).

The determination of flammability requires the presence of three necessary components: an ignition source, a fuel source, and an oxidizer in concentrations that will support combustion. For a RESS abuse test, the fuel will likely be supplied by the RESS, the oxidizer is present in ambient air, and an external ignition source will need to be introduced (although self-ignition is possible for RESSs, it is a dynamic condition not always reproducible or reliable). One example of an appropriate ignition source is a continuous spark source at ≥ 2 Hz with sufficient energy to ignite natural gas. Ignition sources will be placed in locations around the RESS where flammable materials are likely to be released. Because of the dynamics and mixing of vent gases during a test, it is recommended that at least two ignition sources be used in separate locations to measure flammability at different fuel/air ratios. Location of the ignition sources should be documented along with other test conditions to provide a more accurate comparison of test results. It may not be practical to perform flammability analysis for every test. Implementing flammability analysis discussed and agreed to between the customer and testing organization while developing a test plan.

3. RECOMMENDED CORE TEST PROCEDURES

3.1. Mechanical Abuse Tests

3.*1.1. Controlled Crush*

The intent of the controlled crush tests is to determine the abuse response of a RESS to mechanical insult by crushing to failure. The crush tests are performed at slow speeds under controlled conditions to determine the hazard severity at precise levels of intrusion into the RESS.

3.1.1.1. Cylindrical Cell Crush

Minimum Assembly Level: Cell

Description. DUT is crushed continuously at a speed of 1 mm/min along the transverse axis of the cell using a cylindrical impactor. The impactor diameter should scale with cell size as provided in Table 5:

Table 5. Recommended Impactor Diameter and Cell Size Matrix

Impactor diameter (mm)	Cell diameter (mm)
20	Up to 32
30	32- 60
60	>60

The crush should continue until one of the following end conditions has been met: (1) the applied force has reached the limit of 25 kN, or (2) failure of the DUT (HSL ≥5) or (3) the impactor has reached 100% practical displacement into the DUT. The DUT should be monitored for at least 30 minutes after the end of the test. Refer to established local procedures for hazard mitigation upon reentering the test area, rendering the DUT in a safe handling condition, and post-test activities. Refer Section 5. Post-Test Considerations for additional information on post-test activities.

Measured Data. At a minimum, data recorded should include:

- Applied force of the impactor ram on the DUT for the duration of the test
- Displacement or the impactor into the DUT
- Voltage of the DUT
- External temperature of the DUT in multiple locations (if applicable)
- Chemical analysis of the hazardous substances from vented gas and smoke
- Flammability of vented gas and smoke
- Video/audio for the duration of the test
- Still photographs before and after the test
- Mass of the DUT before and after the test
- Dimensions of the DUT before and after the test

Reporting. Reporting hazard severity levels using a graded approach at measured force and displacement values is recommended. Examples are shown in Appendix A: Examples of Hazard Severity Level Reporting.

3.1.1.2. Prismatic/Stacked Pouch Cell Crush

Minimum Assembly Level: Cell

Description. The intent of this test is to crush a prismatic or stacked pouch cell in either the y- or z-orientation (y-orientation = into the positive/negative terminals; z-orientation = perpendicular to the terminals) as defined in Figure 1. **Note:** *Crush tests in the x-orientation should be performed following the Module/Pack Crush procedure in Section 3.1.1.3.* Module/Pack Crush. DUT is crushed in a robust constraint fixture designed to mechanically support the DUT during the test and to mimic a constrained cell in a module or pack. An example of a cell in a constraint is shown in Figure 2. **Note:** *For tests in the y-orientation (into the terminal), care should be taken to electrically isolate the DUT terminals from the test fixture to prevent a current path to the fixture.* The impactor used for this test shall be made of steel and have a semicircular shape with a rectangular base as shown in Figure 3. The radius of the semicircle should scale with the width of the crush surface as shown in Table 6 similar to the scaling described in Section 3.1.1.1. Cylindrical Cell Crush for cylindrical cells. The impactor shall have a length and width equal to the DUT length and width and a height sufficiently large to achieve 100% intrusion into the DUT.[10]

Table 6. Recommended Impactor Diameter and Cell Width Matrix

Impactor diameter (mm)	Cell width (mm)[a]
20	Up to 32
30	32- 60
60	60-150
150	>150[b]

[a]width of the surface being crushed into by the impactor
[b]to scale with the pack crush semi-cylinder radius of 75 mm (150 mm diameter)

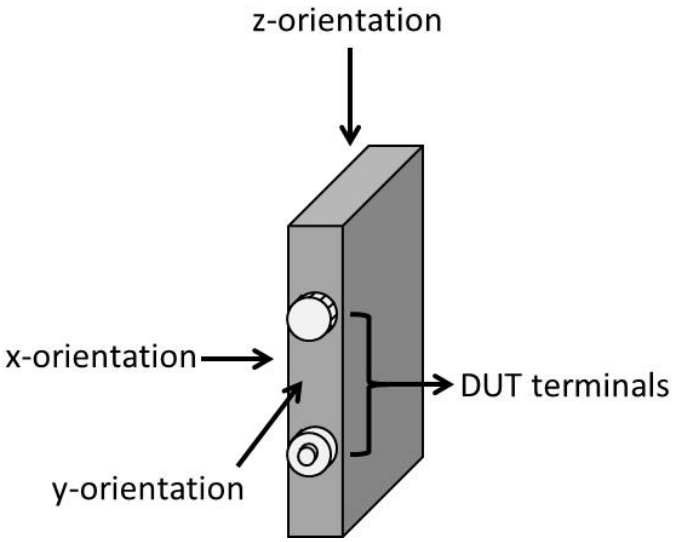

Figure 1. Drawing of a prismatic cell showing the x-, y-, and z-orientations.

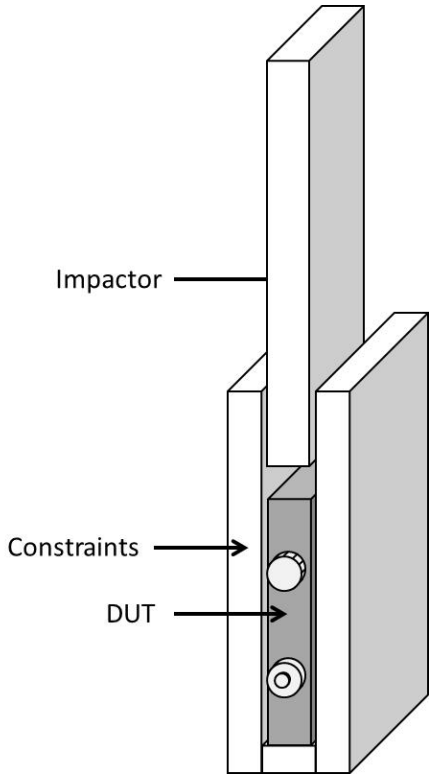

Figure 2. Drawing of a prismatic cell in a constraint fixture to be crushed in the z-orientation

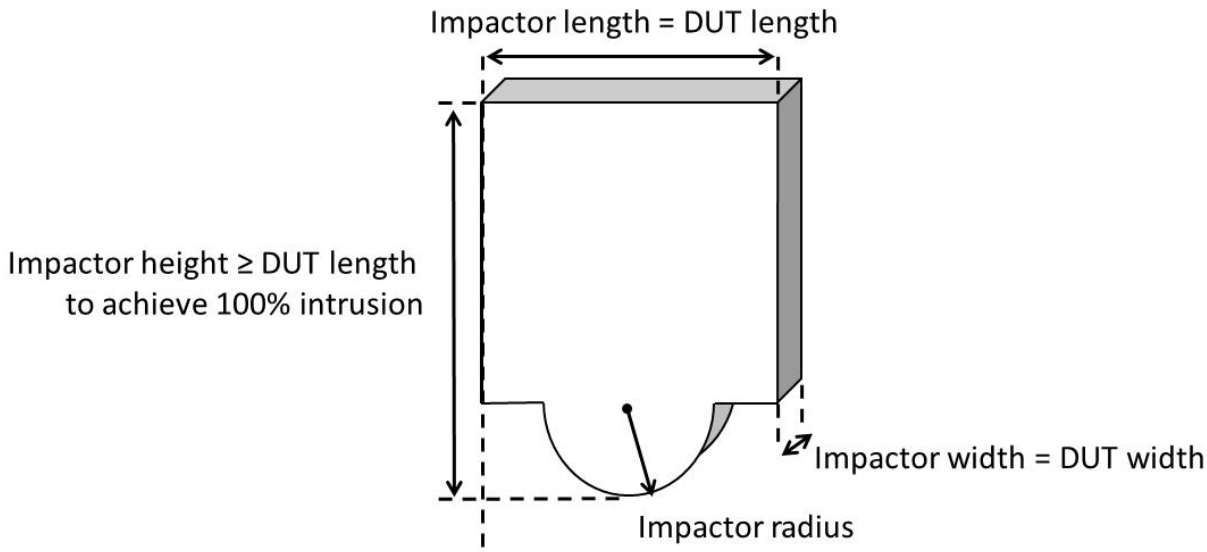

Figure 3. Drawing of the impactor used for controlled crush testing prismatic or pouch cells in the y- and z-orientations.

DUT is crushed continuously at a speed of 1 mm/min using a rectangular steel impactor. The crush should continue until one of the following end conditions has been met: (1) the applied force has reached the limit of 25 kN, or (2) failure of the DUT (HSL ≥5), or (3) the impactor has reached 100% practical displacement into the DUT. The DUT should be monitored for at least 30 minutes after the end of the test. Refer to established local procedures for hazard mitigation upon reentering the test area, rendering the DUT in a safe handling condition, and post-test activities.

Measured Data. At a minimum, data recorded should include:

- Applied force of the impactor ram on the DUT for the duration of the test
- Displacement or the impactor into the DUT
- Voltage of the DUT
- External temperature of the DUT in multiple locations (if applicable)
- Chemical analysis of the hazardous substances from vented gas and smoke
- Flammability of vented gas and smoke
- Video/audio for the duration of the test
- Still photographs before and after the test
- Mass of the DUT before and after the test
- Dimensions of the DUT before and after the test

Reporting. Reporting hazard severity levels using a graded approach at measured force and displacement values is recommended. Examples are shown in Appendix A: Examples of Hazard Severity Level Reporting.

3.1.1.3. Module/Pack Crush

Minimum Assembly Level: Module

Description. DUT is crushed between a flat and a textured platen. The textured platen shall have a single semi-cylindrical impactor with a 75 mm radius in the center of the platen (see Figure 4). The opposing platen should be flat. One or both platens shall be electrically isolated from the crush fixture to avoid providing an additional current path to the device under test. Unless the intruders of the textured platen are made of or coated with a non-conductive material, the possibility of a current path through the textured platen is unavoidable. An example of an appropriate material for the platen is steel. No constraint is specifically defined for module or pack hardware level of assembly.

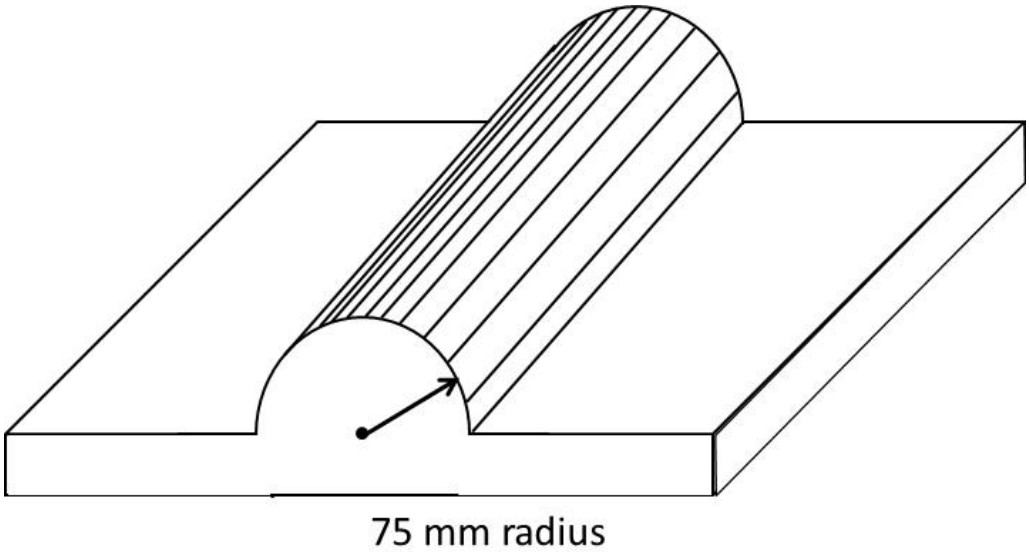

Figure 4. Drawing of the semi-cylindrical impactor plate for module/pack crush testing

DUTs shall have all integrated control and interconnect circuitry in place and operating (if applicable). Place the textured platen to impact the most vulnerable position on the DUT. DUT is crushed continuously at a speed of 1 mm/min. The crush should continue until one of the following end conditions has been met: (2) failure of the DUT (HSL ≥5), or (3) the impactor has reached 100% practical displacement into the DUT. It is important to note that achieving 100% practical displacement ***could require >500 kN of applied force*** depending on module construction. Peak applied force should be documented for all tests. ***The hazard severity and displacement at 100 kN should be reported to be consistent with other published procedures***.[5-7] The DUT should be monitored for at least 30 minutes after the end of the test. Refer to established local procedures for hazard mitigation upon reentering the test area, rendering the DUT in a safe handling condition, and post-test activities.

Measured Data. At a minimum, data recorded should include:

- Applied force of the impactor ram on the DUT for the duration of the test

- Displacement or the impactor into the DUT
- Voltage of the DUT
- Resistance of the module/pack case to ground (isolation loss)
- Internal and external temperature of the DUT in multiple locations (if applicable)
- Chemical analysis of the hazardous substances from vented gas and smoke
- Flammability of vented gas and smoke
- Video/audio for the duration of the test
- Still photographs before and after the test
- Mass of the DUT before and after the test
- Dimensions of the DUT before and after the test
- Leakage or hazards associated with integrated liquid cooled pack
- Monitoring pack active safety features or actions (e.g. opening contactor relay)

Reporting. Reporting hazard severity levels using a graded approach at measured force and displacement values is recommended. ***In that graded approach, the hazard severity and displacement at 100 kN should be reported to be consistent with other published test procedures***.[5-7] Examples are shown in Appendix A: Examples of Hazard Severity Level Reporting.

3.1.2. Penetration

Minimum Assembly Level: Cell

Description. Penetrate the DUT using a 3 ± 0.2 mm diameter conductive rod that is mechanically robust enough not to deform during the penetration. The electrical resistivity of the rod should be less than or equal the electrical resistivity of stainless steel ($\leq 7.41 \times 10^{-5}$ Ω-cm). The end of the rod shall be rounded with 1.5 ± 0.1 mm radius. The linear speed of the rod shall be 0.1 mm/s. The first test should be performed at 100% SOC and at 55 °C (both DUT and test apparatus) which represent the most aggressive test conditions described in the test matrix below (Table 7). The penetration should continue until one of the following end conditions has been met: (1) complete penetration of the DUT (penetration of the last electrode), (2) a measured voltage drop of ≥100 ± 10 mV, (3) failure of the DUT (HSL ≥5). The DUT should be monitored for at least 30 minutes after the end of the test. Refer to established local procedures for hazard mitigation upon reentering the test area, rendering the DUT in a safe handling condition, and post-test activities.

If other test hardware is available, testing should proceed through the test matrix in Table 7, as applicable. It is recommended to first test from the bottom right to the top left of the matrix (100% SOC/55 °C → 90% SOC/45 °C, etc.) until an acceptable HSL rating is reached (not defined in this manual). At that point on the matrix, perform the next test across the row at higher SOC and down the column at higher temperature. This test matrix is intended only to be a guide for penetration testing multiple test articles.

Table 7. Test Matrix for the Penetration Test

Temperature (°C) \ % SOC →	60	70	80	90	100
25					
35					
45					
55					

Measured Data. At a minimum, data recorded should include:

- Applied force of the blunt rod on the DUT for the duration of the test
- Displacement or the blunt rod into the DUT
- Voltage of the DUT (recorded at ≥ 10 Hz)
- Internal and external temperature of the DUT in multiple locations (if applicable)
- Chemical analysis of the hazardous substances from vented gas and smoke
- Flammability of vented gas and smoke
- Video/audio for the duration of the test
- Still photographs before and after the test
- Mass of the DUT before and after the test

Reporting. Reporting hazard severity levels when the DUT package is deformed, just before penetration and after penetration of the DUT package are recommended. Examples are shown in Appendix A: Examples of Hazard Severity Level Reporting.

3.2. Thermal Abuse Tests

3.2.1. Thermal Ramp

Minimum Assembly Level. Cell

Description. The intent of this thermal ramp test is to heat a DUT to the point of failure to quantify the magnitude or consequence of failure. A DUT is instrumented with an appropriate number of thermocouples, wrapped in layer of insulation, and placed in a heated fixture. Examples of a heated fixture may include a brass block for a cylindrical cell, parallel brass plates for a pouch cell, or heater mats for larger format pouch cells. Starting from the normal operating temperature and a DUT at 100% SOC, the DUT is heated at a nominal, constant heating rate of 2-5 °C/min rate (±0.5 °C/min). The end conditions for the test are (1) the DUT temperature reaches 250 °C and is held at 250 °C for 15 minutes without any measured DUT self-heating (dT/dt > 0.1 °C/min) or (2) failure of the DUT (HSL ≥5). The DUT should be monitored for at least 30 minutes after the end of the test. Refer to established local procedures for hazard mitigation upon reentering the test area, rendering the DUT in a safe handling condition, and post-test activities.

If additional test articles are available, tests at lower SOCs should be performed in order to understand how the DUT failure changes with SOC. DUT operating SOCs should be used as a guide for testing at lower SOCs and will be dependent on final application (HEV, PHEV, or EV).

Measured Data. At a minimum, data recorded should include:

- Voltage of the DUT
- External temperature of the DUT in multiple locations (if applicable)
- Temperature of the heater fixture
- Chemical analysis of the hazardous substances from vented gas and smoke
- Flammability of vented gas and smoke
- Video/audio for the duration of the test
- Still photographs before and after the test
- Mass of the DUT before and after the test

Reporting. Reporting hazard severity levels using a graded approach at measured DUT temperatures is recommended. Examples are shown in Appendix A: Examples of Hazard Severity Level Reporting.

3.2.2. Accelerating Rate Calorimetry (ARC)

Minimum Assembly Level. Cell

Description. The intent of this test is to measure the total heat generation and heating rate from a DUT. This measurement is intended to be performed at the cell-level. *Note that a thermal abuse test should be performed on a DUT prior to an ARC experiment to determine if any failure modes of the DUT during thermal abuse could potentially cause damage to the ARC system or ancillary components.* A DUT is placed in an adiabatic accelerating rate calorimeter (ARC) without being in direct contact with the heating elements (side walls, top, bottom) but suspending it from the top jacket. The bomb thermocouple (TC) should be placed on the cell skin for metal packaged cells (cylindrical or prismatic) or on the negative electrode tab for flexible or polymer packaged cells. If the cell is completely enclosed within a sample holder (such as within a pressure tight system), the thermocouple should be placed on the part of the holder in most direct contact with the cell. **Note:** *Pouch cells in a flexible package should be physically constrained to prevent swelling during the ARC experiment to reduce the likelihood of a short circuit failure after cell venting.* Starting from the normal operating temperature of the DUT, the DUT is heated in 5 °C steps with a 30-minute wait step following each heating step. The threshold exotherm value (analyzed during the wait steps) and the maximum temperature of the experiment will depend on the DUT and what data has value to the customer. As an example, for a measurement of the thermal runaway profile for a 2.0 Ah cylindrical lithium-ion cell, an exotherm threshold of 0.02 °C/min and a maximum temperature of 405 °C, could be an appropriate parameter. The DUT should be left in the ARC and allowed to cool to ambient temperature prior to handing the DUT. Refer to established local procedures for hazard mitigation upon reentering the test area, rendering the DUT in a safe handling condition, and post-test activities.

Measured Data. At a minimum, data recorded should include:

- Voltage of the DUT (if practical)

- External temperature of the DUT
- Heating rate of the DUT
- Vent gas pressure from the DUT (if applicable to an experiment performed in a pressure-tight closed system)
- Chemical analysis of the hazardous substances from vented gas and smoke (if applicable)

Reporting. Reporting DUT maximum temperature, DUT heating rate as a function of time and temperature, and vent gas pressure as a function of time and temperature (if applicable) are recommended.

3.3. Electrical Abuse Tests

3.3.1. Overcharge

Minimum Assembly Level: Cell

Description. Starting with a test article at its normal operating temperature and 100% SOC, the DUT is overcharged at a constant current. A suggested list of charge currents (C-rate and A) and compliance voltage limits are provided in Table 8. Charge current specifications are tiered based on the rated capacity of the DUT. ***Note:*** *Tiered test conditions are intended to be realistic but not overly aggressive (e.g. an 80 A charge current for a 2 Ah cell is considered overly aggressive). In general, overly aggressive test conditions result in outcomes that are predictable, do not provide value to the cell manufacturer, and are considered outside the scope of this document.*

Table 8. Cell and Module-level Overcharge Test Matrix

DUT capacity	Recommended test point - Charge current (C-rate or A)[a]			Cell voltage limit	Module voltage limit	Pack voltage limit
16 Ah	1C	2C		20 V	20 V per cell/parallel group or pack voltage	1.5× pack voltage
>16-40Ah	1C	2C	32A[b,8]			
>40	1C	2C	80 A[c,9]			

[a]Recommend performing only 2 of these conditions if 2C and 32/80 A charge current conditions are close to each other (within 10%)
[b]32 A comes from the SAE-J1772 (2001) standard as the maximum current for a Level 2 charging station.
[c]80 A comes from the SAE-J1772 (2009) standard as the maximum current from a Level 2 charging station.

The end conditions for the overcharge test are (1) failure of the DUT (HSL ≥5) or (2) 250% SOC. The DUT should be monitored for at least 30 minutes at the end of the test. Refer to established local procedures for hazard mitigation upon reentering the test area, rendering the DUT in a safe handling condition, and post-test activities.

Measured Data. At a minimum, data recorded should include:

- Voltage of the DUT
- External temperature of the DUT in multiple locations (if applicable)

- Charging current applied to the DUT
- Chemical analysis of the hazardous substances from vented gas and smoke
- Video/audio for the duration of the test
- Still photographs before and after the test
- Mass of the DUT before and after the test

Reporting. ***Reporting hazard severity level a few key SOCs (including 200% SOC) is recommended in addition to the SOC where cell failure occurs***. Examples of this reporting matrix are shown in Appendix A.

3.3.2. Overvoltage (for electrochemical capacitors)

Minimum Assembly Level: Cell

Description. The overvoltage test is intended for electrochemical capacitors. Starting with a test article at its normal operating temperature and 100% SOC, the DUT is charged at a ≥10C to 2× the rated DUT voltage. The charge rate for this test should be negotiated between the manufacturer and the testing organization based on the power rating of the DUT, but should be sufficient to give a voltage increase of ≥2 V/min. ***Note:*** *Charge rates should be chosen to be realistic but not overly aggressive. In general, overly aggressive test conditions result in outcomes that are predictable, do not provide value to the cell manufacturer, and are considered outside the scope of this document.*

The end conditions for the overvoltage test are (1) failure of the DUT (HSL ≥5) or (2) 2× the rated DUT voltage followed by a 15-minute hold without any measureable DUT self-heating (dT/dt > 0.1 °C/min). The DUT should be monitored for at least 30 minutes at the end of the test. Refer to established local procedures for hazard mitigation upon reentering the test area, rendering the DUT in a safe handling condition, and post-test activities.

Measured Data. At a minimum, data recorded should include:
- Voltage of the DUT
- External temperature of the DUT in multiple locations (if applicable)
- Charging current applied to the DUT
- Chemical analysis of the hazardous substances from vented gas and smoke
- Video/audio for the duration of the test
- Still photographs before and after the test
- Mass of the DUT before and after the test

Reporting. Reporting hazard severity level at the end of the test is recommended.

3.3.3. Overdischarge

Minimum Assembly Level: Cell

Description. The overdischarge test is intended for batteries. For the cell-level test starting with a test article at its normal operating temperature and 100% SOC, the DUT is discharged at 1C for either (1) 1.5 hours or (2) failure of the DUT (HSL ≥5). The cell-level compliance voltage should be set to -20 V. For module- or pack-level tests, the 1C discharge should continue until one of the following end conditions: (1) 1.5 hours, (2) all subassemblies achieve voltage reversal for 15 minutes, or (3) failure of the DUT (HSL ≥5). The DUT should be monitored for at least 30 minutes at the end of the test. Refer to established local procedures for hazard mitigation upon reentering the test area, rendering the DUT in a safe handling condition, and post-test activities.

Measured Data. At a minimum, data recorded should include:

- Voltage of the DUT
- External temperature of the DUT in multiple locations (if applicable)
- Discharge current applied to the DUT
- Chemical analysis of the hazardous substances from vented gas and smoke
- Video/audio for the duration of the test
- Still photographs before and after the test
- Mass of the DUT before and after the test

Reporting. Reporting the hazard severity level at the end of the test is recommended.

3.3.4. Voltage Reversal

Minimum Assembly Level: Cell

Description. The voltage reversal test is intended for electrochemical capacitors. Starting with a test article at its normal operating temperature and fully discharged to 0% SOC, the DUT is charged at 5C to its rated voltage. Once the rated voltage limit is reached, the DUT is discharged at 5C to the negative of its rated voltage. The end conditions for the test include (1) DUT has reached the negative of its rated voltage and held for 15 minutes or (2) failure of the DUT (HSL ≥5). DUT should be monitored for at least 30 minutes at the end of the test. Refer to established local procedures for hazard mitigation upon reentering the test area, rendering the DUT in a safe handling condition, and post-test activities.

Measured Data. At a minimum, data recorded should include:

- Voltage of the DUT
- External temperature of the DUT in multiple locations (if applicable)
- Charge and discharge current applied to the DUT
- Chemical analysis of the hazardous substances from vented gas and smoke
- Video/audio for the duration of the test
- Still photographs before and after the test
- Mass of the DUT before and after the test

Reporting. Reporting the hazard severity level at the end of the test is recommended.

3.3.5. External Short Circuit

Minimum Assembly Level: Cell

Description. The intent of the test is to determine the DUT response to external short circuit. Short circuit resistance (load) is defined relative to the DC resistance of the DUT.

Table 9. Cell and Module Short Circuit Resistance Matrix

Short circuit[a]	Short circuit resistance
Hard short	≈ 1/10-1× DUT DC resistance
Medium short	≈ 5-10× DUT DC resistance
Soft short	≥ 100× DUT DC resistance

[a]Recommend performing external short circuit tests under both the hard and medium short conditions

For DUTs with an internal resistance < 5 mΩ, a practical short circuit load of 1-5 (±5%) mΩ should be used and documented based on local capabilities. For unknown DUT resistances, a 1 (±10%) mΩ load resistance should be used. The short circuit load should be applied in less than 1 second for a minimum of 60 minutes or until one other end condition is met. *Note: The short circuit load includes the contact resistance and the cable resistance.* The end conditions for the test include (1) failure of the DUT (HSL ≥5) or (1) application of the short circuit load for 60 minutes. **Note:** *At the module or pack level, DUT failures have been observed where the short load has been applied for >120 minutes.* ***Consideration of longer duration short circuit tests at the module/pack level may be appropriate.*** DUT should be monitored for at least 30 minutes at the end of the test. Refer to established local procedures for hazard mitigation upon reentering the test area, rendering the DUT in a safe handling condition, and post-test activities.

Measured Data. At a minimum, data recorded should include:

- Voltage of the DUT (recommended data collection at 1 kHz for at least the first 5 seconds of the applied short, followed by 1 Hz data rate for the remainder)
- External temperature of the DUT in multiple locations (internal at the module/pack level) (if applicable)
- Measured short circuit current (using two separate CVRs) (recommended at 1 kHz during the first 5 seconds of the applied short)
- Chemical analysis of the hazardous substances from vented gas and smoke
- Video/audio for the duration of the test
- Still photographs before and after the test
- Mass of the DUT before and after the test

Reporting. Reporting the hazard severity level at the end of the test is recommended.

3.4. Failure Propagation Test

Minimum Assembly Level: Module

Description. The intent of this test is to initiate a single cell thermal runaway under otherwise normal battery operating conditions and evaluate how that failure propagates from cell-to-cell within a battery module or pack. This procedure is adapted from Lamb et al. and SAND2014-17053.[10,11] The first step is to experimentally determine a thermal runaway initiation trigger prior to a module- or pack-level test. Abuse tests described in this manual may be used as initiation triggers, but other initiation techniques should also be considered as long as they ***result in a typical and reproducible thermal runaway condition for a given cell type***. It is recommended that this initiation trigger be experimentally evaluated and documented at the cell-level prior to module or pack testing. Another important consideration for a trigger is that it should have the ability to be readily applied in multiple locations within a battery module or pack, while maintaining the attributes of a single cell thermal runaway initiator without materially compromising or altering the other cells.

Once a cell-level initiator has been identified, the next step is to perform the module or pack propagation test. It is recommended that this test be performed on both batteries with active control systems enabled and disabled in order to demonstrate any potential performance improvements with controls in place. Passive controls integrated into the battery design should be left in place for all tests. At a minimum, it is recommended that the cell failure be initiated at 100% state-of-charge (SOC) and 25 °C. The most vulnerable initiation location will vary with battery design and should be guided by thermal modeling, previous test experience, or other data. For example, battery designs with interstitial heat sink materials between cells have the most vulnerability at the edge and corner cells.[12] Because of the variability that can exist with cell thermal runaway, multiple tests are highly recommended at several initiation locations and SOCs to determine reliable design margin. Locations within a battery module or pack should be considered to (1) maximize the number of cells involved in the test and (2) represent any potential design vulnerabilities based on use condition or misuse.

After the initial cell thermal runaway is initiated, the test article should be monitored based on the battery HSL rating response. If thermal runaway does not propagate (HSL ≤ 4), monitor for at least 60 minutes after initiation. If thermal runaway does propagate, monitor for an additional 60 minutes from the end of the last failure event (HSL 5-7). Refer to established local procedures for hazard mitigation upon reentering the test area, rendering the DUT in a safe handling condition, and post-test activities.

Measured Data. At a minimum, measured data should include:

- Relevant data applicable to the initiation trigger abuse applied
- Voltage of the DUT at the cell, module, and pack level (if applicable)
- Internal and/or external temperature of the DUT at the cell, module, and pack level (if applicable)
- Chemical analysis of the hazardous substances from vented gas and smoke
- Flammability of vented gas and smoke
- Video/audio for the duration of the test

- Still photographs before and after the test
- Mass of the DUT before and after the test

Reporting. Reporting the extent of failure propagation (number of cells, proximity to the triggered cell, and failure mode of cells), hazard severity level for subunits and highest assembly level unit, and duration of any propagation event(s) is recommended.

4. SUPPLEMENTAL TEST PROCEDURES

4.1. Cell Vent Flammability Test

The Cell Vent Flammability Test is a variant of the Thermal Ramp Test (Section 3.2.1) with the use of an ignition source to determine vent gas flammability.

Minimum Assembly Level: Cell

Description. The intent of this test is solely to evaluate vent gas flammability. A separate test method for analyzing the flammability of RESS products that can be generated during cell venting and/or thermal runaway in response to an abuse condition is described in Section 2.3. Flammability Analysis.

The Cell Vent Flammability Test (CVFT) is adapted from Nagasubramanian et al. and SAND2012-9186.[13,14] The DUT is placed in a heater fixture as described in Section 3.2.1. Thermal Ramp. For a DUT with a clearly identified vent path in the cell design (e.g. a machine stamped vent in a prismatic cells or a rupture disc in the header of a cylindrical cell), then one ignition source should be placed along the vent path location at a distance of 40 ± 5 mm away. For a DUT without a well-defined vent path (e.g. a flexible pouch cell) multiple ignition sources could be used in an effort to capture the vent path. **Note:** *One common vent path for pouch cells with co-located electrode tabs is between the tabs and is a location that should be considered for one ignition source.* An alternative would be to utilize an enclosure around the cell with a defined vent path and a single ignition source at the vent path, similar to the rendering in Figure 5.

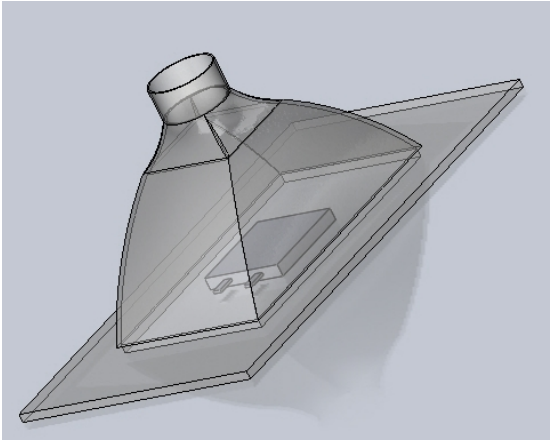

Figure 5. Enclosure around a cell to provide a defined vent path

Follow the Section 3.2.1. Thermal Ramp procedure to heat the DUT at a nominal, constant 5 °C/min rate. If ignition and sustained fire occurs after the cell vent, cell heating is stopped. The test is ended when the fire self-extinguishes. If ignition and sustained fire does not occur, the DUT is heated at 5 °C/min to 250 °C and held for 15 minutes. The test is ended after the 15-minute hold at 250 °C, or when the sustained fire from vent gas ignition is self-extinguished.

Refer to established local procedures for hazard mitigation upon reentering the test area, rendering the DUT in a safe handling condition, and post-test activities.

Measured Data. At a minimum, measured data should include:

- Voltage of the DUT
- External temperature of the DUT in multiple locations (if applicable)
- Video/audio for the duration of the test
- Still photographs before and after the test
- Mass of the DUT before and after the test

Reporting. Reporting the location and type of ignition sources relative to the DUT, vent temperature, presence of sustained ignition (yes or no), the delay time from venting to ignition, ignition temperature, and the total burn time are recommended.

4.2. Shutdown Separator Integrity

Minimum Assembly Level. Cell

Description. The intent of this test is to determine the voltage stability of a shutdown separator measured at the cell-level. ***Note:*** *This test is only applicable to RESSs with shutdown separators.* The DUT is set up in a heated fixture as described for the Thermal Ramp Test (Section 3.2.1. Thermal Ramp). The DUT should also be connected to a DC power supply or battery cycler. The DUT at 100% SOC is heated from its normal operating temperature at a nominal, constant heating rate between 2-5 °C/min rate (±0.5 °C/min) and then held at a temperature that is 5 °C greater than the shutdown temperature of separator (if known). If the separator does not shutdown at this temperature, increase the temperature in 5 °C increments until a shutdown is measured. Cell voltage should be monitored continuously during this test. Separator shutdown can be confirmed by attempting to apply a nominal discharge charge current. The cell resistance should be too high to support any nominal discharge current if the separator is shutdown. Once the separator is shutdown, apply 20 V (DC) with a maximum current of 1 A for 30 minutes. The test is ended (1) after 30 minutes or (2) DUT failure (HSL ≥5). Refer to established local procedures for hazard mitigation upon reentering the test area, rendering the DUT in a safe handling condition, and post-test activities.

Measured Data. At a minimum, measured data should include:

- Voltage of the DUT
- External temperature of the DUT in multiple locations (if applicable)
- Temperature of the heater fixture
- Voltage of the power supply
- Current of the power supply
- Chemical analysis of the hazardous substances from vented gas and smoke
- Flammability of vented gas and smoke
- Video/audio for the duration of the test
- Still photographs before and after the test
- Mass of the DUT before and after the test

Reporting. Reporting hazard severity level at the end of the test, the peak leakage current, and duration of the applied voltage are recommended.

4.4. Water Immersion

Minimum Assembly Level: Cell

Description. The intent of this test is to evaluate a RESS performance when immersed in salt water. Salt water should be an approximation of seawater (3.5% (600 mM, 35 ppt) sodium chloride). A practical way to achieve this, is by using a solution of sea salt or aquarium salt in water. This test can be performed in one of two ways. The first is to fully immerse the DUT in an adequately sized vessel of salt water. The second is to start with the DUT in an empty vessel and fill the vessel with salt water in <5 minutes. The RESS should be at 100% SOC and at normal operating temperature for this test. Note that if water electrolysis occurs, heat and hydrogen generation from the salt water can occur within 1 second of immersion and should be monitored. The DUT should remain immersed for (1) a minimum of 2 hours or (2) until failure of the DUT (HSL ≥5). DUT should be monitored for at least 30 minutes after the completion of the test. Refer to established local procedures for hazard mitigation upon reentering the test area, rendering the DUT in a safe handling condition, disposal of the immersion liquid and post-test activities. ***Note****: Immersion in other common fluids to which the DUT might be exposed (e.g. battery coolant, fuel) is also recommended if additional units are available. Many engine compartment fluids are flammable and appropriate risk mitigation approaches should be taken. Examples may include immersion of the DUT as quickly as possible and executing tests in facilities appropriate for fuel fire testing.*

Measured Data. At a minimum, measured data should include:

- Voltage of the DUT at the cell, module, and pack level (if applicable)
- Resistance of the DUT package to ground (isolation loss)
- Internal and/or external temperature of the DUT at 1 kHz for the first 5 seconds and 1 Hz for the duration of the test at the cell, module, and pack level (if applicable)
- Chemical analysis of the hazardous substances from vented gas and smoke from the DUT and species evolved from the salt water bath (hydrogen and steam)
- Video/audio for the duration of the test
- Still photographs before and after the test

Reporting. Reporting the hazard severity level at the end of the test is recommended.

4.5. Fuel Fire

Minimum Assembly Level. Module

Description. The intent of this test is to develop an understanding of how a RESS will respond when it is directly exposed to a fire. This is described in ECE R100 Annex 8E.[6]

4.6. Simulated Fuel Fire

Minimum Assembly Level: Module.

Description: Because of the destructive nature of a fuel fire test to the data monitoring and recording capabilities, a radiant heat source to simulate fuel fire conditions can be used to determine a RESS response to the high temperature conditions of a fire. This test procedure is described in SAND2005-3123 and SAE J2464 Section 4.4.1. (Rev. Nov 2009).[1,5]

5. POST-TEST CONSIDERATIONS

Post-test processes may include reentering a testing area, physically handling a DUT, and cleaning a testing area. The hazards and mitigations associated with tested DUTs will depend on the chemistry, size, and design of the DUT. Potential hazards may include residual stored energy (unanticipated thermal runaway or release of stored energy), heavy loads (depending on physical size of the DUT), electric shock, chemical exposure (from electrolyte, active materials, degradation products), toxic gas exposure (from degradation products), and exposure to respirable particulates. Hazard mitigation strategies may include both engineered and administrative controls. Examples of engineered controls to mitigate these hazards include local exhaust ventilation (LEV) to dissipate potential toxic gases, real-time monitoring and analysis, and lock-out tag-out (LOTO) of electrical equipment to prevent electrical exposure. Examples of administrative controls may include approved procedures describing waiting times and/or DUT temperature thresholds to reenter a test area, training (electrical and/or chemical safety, lifting or rigging), signage, barriers, checklists, other operator aids, and personal protective equipment (PPE) including but not limited to respiratory protection, Tyvek coveralls, gloves, and/or safety glasses.

In the testing procedures, recommended post-test monitoring times are included. These are intended to provide some time to ensure adequate data collection and a minimum amount of time to allow all reactions to be complete. Also in the procedures, the statement is made to follow any local or established procedures in order to meet any regulatory, institutional, or other facility requirements.

6. REFERENCES

1. D. H. Doughty and C. C. Crafts, "FreedomCAR Electrical Energy Storage System Abuse Test Manual for Electric and Hybrid Electric Vehicle Applications," *Sandia Report SAND2005-3123*, 2005.
2. Naval Sea Systems Command (NAVSEA) "High-Energy Storage System Safety Manual" SG270-BV-SAF-010.
3. A. Masias, "Electric Vehicle Safety: Design & Research," ARPA-E Crash Safety Energy Storage Systems for Electric Vehicles Workshop, 2012.
4. MIL-STD-882E, "Department of Defense Standard Practice, System Safety" 2012.
5. SAE Surface Vehicle Recommended Practice, "Electric and Hybrid Electric Vehicle Rechargeable Energy Storage System (RESS) Safety and Abuse Testing," *J2464*, 2009.
6. UN/ECE Regulation No100.02: Uniform provisions concerning the approval of vehicles with regard to specific requirements for the electric power train, 2013.
7. UL 2580: Batteries for Use In Electric Vehicles, 2013.
8. "SAE Electric Vehicle and Plug in Hybrid Electric Vehicle Conductive Charge Coupler," *J1772*, 2001.
9. "SAE Electric Vehicle and Plug in Hybrid Electric Vehicle Conductive Charge Coupler," *J1772*, 2009.
10. J. Lamb, C. J. Orendorff, L. A. M. Steele, S. Spangler, *J. Power Sources*, 283 (2015), 517-523.
11. C. J. Orendorff, J. Lamb, L.M. Steele, S. Spangler. "Propagation Testing of Multi-cell Batteries," *Sandia Report SAND2014-17053,* 2014.
12. E. Darcy. "Battery Safety Design Guidelines," *International Battery Safety Workshop*, May 2017
13. G. Nagasubramanian and C. J. Orendorff, *J. Power Sources,* 196 (2011), 8604-8609.
14. C. J. Orendorff, G. Nagasubramanian, T. N. Lambert, K. R. Fenton, C. A. Apblett, C. R. Shaddix, M. Geier, and E. P. Roth, "Advanced Inactive Materials for Improved Lithium-Ion Battery Safety," *Sandia Report SAND2012-9186*, 2012.

APPENDIX A: EXAMPLES OF HAZARD SEVERITY LEVEL REPORTING

Example of hazard severity level (HSL) reporting at the DUT skin temperature during a thermal abuse test:

DUT Skin Temperature (°C)	HSL
150	2
175	4
200	4
225	5

Example of HSL reporting at the DUT %SOC during an overcharge abuse test:

DUT %SOC	HSL
160	2
180	2
200[a]	2
206	5 (Failure)

[a]For overcharge abuse testing, always report out the hazard severity level at 200% SOC.

Example of HSL reporting at the displacement into the DUT and measured force during a mechanical crush abuse test:

Displacement (mm)	Force (kN)	HSL
10	2	2
20	10	2
30	50	3
40	100[a]	4
50	250	5

[a]For mechanical testing, always report out the hazard severity level at 100 kN.

Example of HSL reporting at the displacement into the DUT and cell open circuit voltage during a penetration abuse test:

Displacement (mm)	Cell Voltage (V)	HSL
10	4.2	2
20	4.2	2
30	4.2	2
40	0.5	5

DISTRIBUTION

Department of Energy
Attn: Brian Cunningham
1000 Independence Ave, SW
EE-2G/Room 5G030
Washington, D.C., 20585

Department of Energy
Attn: Samm Gillard
1000 Independence Ave, SW
EE-2G/Room 5G030
Washington, D.C., 20585

MS1450	Chris Grosso	02546
MS0613	Josh Lamb	02546
MS1450	Jill Langendorf	02546
MS0613	Chris Orendorff	02546
MS1450	Jerry Quintana	02546
MS0613	Leigh Anna Steele	02546
MS0613	June Stanley	02546
MS0613	Loraine Torres-Castro	02546
MS0899	Technical Library	9536 (electronic copy)

Sandia National Laboratories