SANDIA REPORT

SAND2017-11350
Unlimited Release
Printed October 2017

Xyce™ Parallel Electronic Simulator Reference Guide, Version 6.8

Eric R. Keiter, Karthik V. Aadithya, Ting Mei, Thomas V. Russo, Richard L. Schiek, Peter E. Sholander, Heidi K. Thornquist, Jason C. Verley

Prepared by
Sandia National Laboratories
Albuquerque, New Mexico 87185 and Livermore, California 94550

Sandia National Laboratories is a multimission laboratory managed and operated by National Technology and Engineering Solutions of Sandia, LLC, a wholly owned subsidiary of Honeywell International, Inc., for the U.S. Department of Energy's National Nuclear Security Administration under contract DE-NA0003525.

Approved for public release; further dissemination unlimited.

Sandia National Laboratories

Issued by Sandia National Laboratories, operated for the United States Department of Energy by National Technology and Engineering Solutions of Sandia, LLC.

NOTICE: This report was prepared as an account of work sponsored by an agency of the United States Government. Neither the United States Government, nor any agency thereof, nor any of their employees, nor any of their contractors, subcontractors, or their employees, make any warranty, express or implied, or assume any legal liability or responsibility for the accuracy, completeness, or usefulness of any information, apparatus, product, or process disclosed, or represent that its use would not infringe privately owned rights. Reference herein to any specific commercial product, process, or service by trade name, trademark, manufacturer, or otherwise, does not necessarily constitute or imply its endorsement, recommendation, or favoring by the United States Government, any agency thereof, or any of their contractors or subcontractors. The views and opinions expressed herein do not necessarily state or reflect those of the United States Government, any agency thereof, or any of their contractors.

Printed in the United States of America. This report has been reproduced directly from the best available copy.

Available to DOE and DOE contractors from
U.S. Department of Energy
Office of Scientific and Technical Information
P.O. Box 62
Oak Ridge, TN 37831

Telephone: (865) 576-8401
Facsimile: (865) 576-5728
E-Mail: reports@adonis.osti.gov
Online ordering: http://www.osti.gov/bridge

Available to the public from
U.S. Department of Commerce
National Technical Information Service
5285 Port Royal Rd
Springfield, VA 22161

Telephone: (800) 553-6847
Facsimile: (703) 605-6900
E-Mail: orders@ntis.fedworld.gov
Online ordering: http://www.ntis.gov/help/ordermethods.asp?loc=7-4-0#online

SAND2017-11350
Unlimited Release
Printed October 2017

Xyce™ Parallel Electronic Simulator Reference Guide, Version 6.8

Eric R. Keiter, Karthik V. Aadithya, Ting Mei, Thomas V. Russo,
Richard L. Schiek, Peter E. Sholander, Heidi K. Thornquist, Jason C. Verley
Electrical Models and Simulation

Sandia National Laboratories
P.O. Box 5800, M/S 1177
Albuquerque, NM 87185-1177

Abstract

This document is a reference guide to the **Xyce** Parallel Electronic Simulator, and is a companion document to the **Xyce** Users' Guide [1] . The focus of this document is (to the extent possible) exhaustively list device parameters, solver options, parser options, and other usage details of **Xyce**. This document is *not* intended to be a tutorial. Users who are new to circuit simulation are better served by the **Xyce** Users' Guide [1] .

Copyright © 2002 National Technology & Engineering Solutions of Sandia, LLC (NTESS).

Acknowledgements

We would like to acknowledge all the code and test suite developers who have contributed to the Xyce project over the years: Alan Lundin, Arlon Waters, Ashley Meek, Bart van Bloemen Waanders, Brad Bond, Brian Fett, Christina Warrender, David Baur, David Day, David Shirley, Deborah Fixel, Derek Barnes, Eric Rankin, Erik Zeek, Gary Hennigan, Herman ”Buddy” Watts, Jim Emery, Keith Santarelli, Laura Boucheron, Lawrence Musson, Mary Meinelt, Mingyu ”Genie” Hsieh, Nicholas Johnson, Philip Campbell, Rebecca Arnold, Regina Schells, Richard Drake, Robert Hoekstra, Roger Pawlowski, Russell Hooper, Samuel Browne, Scott Hutchinson, Smitha Sam, Steven Verzi, Tamara Kolda, Timur Takhtaganov, and Todd Coffey.

Also, thanks to Hue Lai for the original typesetting of this document in LaTeX.

Trademarks

Xyce Electronic Simulator™ and Xyce™ are trademarks of National Technology & Engineering Solutions of Sandia, LLC (NTESS).

All other trademarks are property of their respective owners.

Contact Information

Outside Sandia

World Wide Web	http://xyce.sandia.gov
Email	xyce@sandia.gov

Inside Sandia

World Wide Web	http://xyce.sandia.gov
Email	xyce-sandia@sandia.gov
Bug Reports	http://joseki-vm.sandia.gov/bugzilla http://morannon.sandia.gov/bugzilla

Contents

1. Introduction **23**

1.1 Overview 24

1.2 How to Use this Guide 24

Typographical conventions 24

2. Netlist Reference **25**

2.1 Netlist Commands 26

2.1.1 `.AC` (AC Analysis) 26

2.1.2 `.DC` (DC Sweep Analysis) 27

Linear Sweeps 27

Decade Sweeps 27

Octave Sweeps 27

List Sweeps 27

2.1.3 `.DCVOLT` (Initial Condition, Bias point) 29

2.1.4 `.END` (End of Circuit) 30

2.1.5 `.ENDS` (End of Subcircuit) 31

2.1.6 `.FOUR` (Fourier Analysis) 32

2.1.7 `.FUNC` (Function) 33

2.1.8 `.GLOBAL_PARAM` (Global parameter) 34

2.1.9 `.HB` (Harmonic Balance Analysis) 35

2.1.10 `.IC` (Initial Condition, Bias point) 36

2.1.11 .INC or .INCLUDE (Include file) 37
2.1.12 .LIB (Library file) 38
.LIB call statement 38
.LIB definition statement 38
2.1.13 .MEASURE (Measure output) 40
Measure Output 48
Measurement Windows 48
Re-Measure 49
RISE, FALL and CROSS Qualifiers 50
Additional Examples 52
Suppresssing Measure Output 53
ERROR Measure 54
Behavior for Unsupported Types 54
HSpice Compatibility 54
2.1.14 .MODEL (Model Definition) 56
LEVEL Parameter 57
Model Interpolation 57
2.1.15 .NODESET (Approximate Initial Condition, Bias point) 59
2.1.16 .NOISE (Noise Analysis) 60
2.1.17 .OP (Bias Point Analysis) 61
2.1.18 .OPTIONS Statements 62
.OPTIONS DEVICE (Device Package Options) 62
.OPTIONS TIMEINT (Time Integration Options) 64
.OPTIONS HBINT (Harmonic Balance Options) 68
.OPTIONS NONLIN (Nonlinear Solver Options) 68
.OPTIONS LOCA (Continuation and Bifurcation Tracking Package Options) . . . 71

.OPTIONS LINSOL (Linear Solver Options) 72
.OPTIONS LINSOL-HB (Linear Solver Options) 74
.OPTIONS OUTPUT (Output Options) 75
.OPTIONS RESTART (Checkpointing Options) 75
.OPTIONS RESTART (Restarting Options) 76
.OPTIONS RESTART: special notes for use with two-level-Newton 77
.OPTIONS SENSITIVITY (Direct and Adjoint Sensitivity Options) 77
2.1.19 .PARAM (Parameter) 79
2.1.20 .PREPROCESS REPLACEGROUND (Ground Synonym) 80
2.1.21 .PREPROCESS REMOVEUNUSED (Removal of Unused Components) 81
2.1.22 .PREPROCESS ADDRESISTORS (Adding Resistors to Dangling Nodes) 82
2.1.23 .PRINT (Print output) 84
Print AC Analysis 90
Print DC Analysis 91
Print Harmonic Balance Analysis 92
Print Noise Analysis 93
Print Transient Analysis 94
Print Homotopy 95
Print Sensitivity 95
Parameter Stepping 96
Device Parameters and Internal Variables 98
2.1.24 .RESULT (Print results) 100
Example Netlist 100
2.1.25 .SAVE (Save operating point conditions) 101
2.1.26 .SENS (Compute DC or transient sensitivities) 102
2.1.27 .STEP (Step Parametric Analysis) 104

Linear Sweeps 104
Decade Sweeps 105
Octave Sweeps 106
List Sweeps 106
2.1.28 .SUBCKT (Subcircuit) 107
2.1.29 .TRAN (Transient Analysis) 109
2.1.30 Miscellaneous Commands 111
* (Comment) 111
; (In-line Comment) 111
+ (Line Continuation) 111
2.2 Expressions 112
2.2.1 Expressions in .PARAM or .GLOBAL_PARAM Statements 116
2.2.2 Expressions in .PRINT Lines 117
2.2.3 Limitations on Using Complex Values in Expressions 117
2.2.4 Expressions for Device Instance and Model Parameters 118
2.2.5 Special PSpice POLY expression 118
Voltage-controlled sources 119
Current-controlled sources 119
B sources 120
2.3 Devices 122
2.3.1 Voltage Nodes 128
Global nodes 128
Subcircuit Nodes 128
2.3.2 Legal Characters in Node and Device Names 129
2.3.3 Lead Currents and Power Calculations 130
2.3.4 Capacitor 131

2.3.5 Inductor 135
2.3.6 Mutual Inductors 138
2.3.7 Resistor 145
2.3.8 Diode 150
2.3.9 Independent Current Source 160
2.3.10 Independent Voltage Source 165
2.3.11 Voltage Controlled Voltage Source 170
2.3.12 Current Controlled Current Source 172
2.3.13 Voltage Controlled Current Source 173
2.3.14 Current Controlled Voltage Source 174
2.3.15 Nonlinear Dependent Source 175
2.3.16 Bipolar Junction Transistor (BJT) 176
The Level 1 Model 178
VBIC Temperature Considerations 180
Level 1 BJT Tables 183
Level 10 BJT Tables (VBIC 1.2) 185
Level 11 and 12 BJT Tables (VBIC 1.3) 190
Level 23 BJT Tables (FBH HBT_X) 200
Level 230 BJT Tables (HICUM/L0) 203
Level 234 BJT Table (HICUM/L2) 207
Level 504 and 505 BJT Tables (MEXTRAM) 212
2.3.17 Junction Field-Effect Transistor (JFET) 220
2.3.18 Metal-Semiconductor FET (MESFET) 224
2.3.19 MOS Field Effect Transistor (MOSFET) 226
Level 1 MOSFET Tables (SPICE Level 1) 239
Level 2 MOSFET Tables (SPICE Level 2) 241

Level 3 MOSFET Tables (SPICE Level 3) 243
Level 6 MOSFET Tables (SPICE Level 6) 245
Level 9 MOSFET Tables (BSIM3) 247
Level 10 MOSFET Tables (BSIM SOI) 261
Level 14/54 MOSFET Tables (BSIM4) 283
Level 18 MOSFET Tables (VDMOS) 310
Level 77 MOSFET Tables (BSIM6 version 6.1.1) 314
Level 102 MOSFET Tables (PSP version 102.5) 344
Level 103 MOSFET Tables (PSP version 103.4) 357
Level 110 MOSFET Tables (BSIM CMG version 110.0.0) 390
Level 107 MOSFET Tables (BSIM CMG version 107.0.0) 426
Levels 2000 and 2001 MOSFET Tables (MVS version 2.0.0) 457
Level 301 MOSFET Tables (EKV version 3.0.1) 459
2.3.20 Lossy Transmission Line (LTRA) 467
2.3.21 Voltage- or Current-controlled Switch 469
2.3.22 Generic Switch 472
2.3.23 Lossless (Ideal) Transmission Line 473
2.3.24 Lumped Transmission Line 475
2.3.25 Behavioral Digital Devices 477
2.3.26 Y-Type Behavioral Digital Devices (Deprecated) 482
2.3.27 Accelerated mass 487
2.3.28 Power Grid 488
2.3.29 Memristor Device 500
2.3.30 Subcircuit 507
2.4 TCAD Devices 509
2.4.1 Physical Models 519

Material Models and Parameters 519
Effective Mass 519
Electron Effective Mass 519
Hole Effective Mass 519
Intrinsic Carrier Concentration 519
Bandgap 520
2.4.2 Mobility Models 522
Analytic Mobility 522
Arora Mobility 523
Carrier-Carrier Scattering Mobility 524
Lombardi Surface Mobility Model 526
Edge Mobilities 528
Boundary Conditions for Electrode Contacts 529
Neutral Contacts 529
Schottky Contacts 530
Metal-Oxide-Semiconductor Contacts 534
NMOS Device 534

3. Command Line Arguments **537**

4. Runtime Environment **539**

4.1 Running **Xyce** in Serial 539
4.2 Running **Xyce** in Parallel 539
4.3 Running **Xyce** on Sandia HPC and CEE Platforms 539

5. Setting Convergence Parameters for Xyce **540**

5.1 Adjusting Transient Analysis Error Tolerances 540
5.1.1 Setting RELTOL and ABSTOL 540

5.2 Adjusting Nonlinear Solver Parameters (in transient mode) 541

6. Quick Reference for Users of Other SPICE Circuit Simulators 542

6.1 Differences Between **Xyce** and PSpice 542

6.1.1 Command Line Options 542

6.1.2 Device Support 542

6.1.3 Netlist Support 542

6.1.4 Converting PSpice ABM Models for Use in **Xyce** 543

6.1.5 Usage of **.STEP** Analysis 544

Global **.PARAM** Sweeps 544

Model Parameter Sweeps 544

6.1.6 Behavioral Digital Devices 545

6.1.7 Power Dissipation 545

6.1.8 Dependent Sources with TABLE Syntax 545

6.1.9 MODEL STATEMENTS 546

6.1.10 .NODESET and .IC Statements 546

6.1.11 Piecewise Linear Sources 547

6.1.12 Additional differences 547

6.1.13 Translating Between PSpice and **Xyce** Netlists 549

6.2 Differences Between **Xyce** and Other SPICE Simulators 550

6.3 DC Operating Point Calculation Failures in **Xyce** 552

6.3.1 Incompatible Voltage Constraints at Circuit Nodes 552

6.3.2 Multiple Voltage Constraints From Subcircuits or at Global Nodes 553

6.3.3 NODESET and IC Statements in Subcircuits 553

6.3.4 No DC Path to Ground for a Current Flow 554

6.3.5 Inductor Loops 554

6.3.6 Infinite Slope Transistions 554

6.3.7 Simulation Settings 554

7. Quick Reference for Microsoft Windows Users **555**

8. Rawfile Format **557**

8.1 ASCII Format 557

8.2 Binary Format 558

8.3 Special Notes 558

Appendix

A. Third Party Licenses **562**

List of Figures

2.1 BJT model schematic 178

2.2 VBIC thermal network schematic 181

2.3 Lumped Π Model for PowerGridBranch 496

2.4 Equivalent Circuit for PowerGridbusShunt 497

2.5 Equivalent Circuit for PowerGridTransformer 498

2.6 Neutral Contacts 530

2.7 Schottky Contact, N-type 531

2.8 Schottky Contact, P-type 532

List of Tables

1.1 **Xyce** typographical conventions. 24

2.1 RISE, FALL and CROSS Support in .MEASURE. 51

2.2 Options for Device Package 63

2.3 Options for Time Integration Package. 64

2.4 Options for HB. 68

2.5 Options for Nonlinear Solver Package. 69

2.6 Options for Continuation and Bifurcation Tracking Package. 71

2.7 Options for Linear Solver Package. 73

2.8 Options for Linear Solver Package for HB. 75

2.9 Options for Sensitivity Package. 78

2.10 Print AC Analysis Type 90

2.11 Print DC Analysis Type 91

2.12 Print HB Analysis Type 92

2.13 Print NOISE Analysis Type 94

2.14 Print Transient Analysis Type 94

2.15 Print Homotopy 95

2.16 Print Sensitivities 95

2.17 Print Transient Adjoint Sensitivities 95

2.20 Operators 112

2.21 Arithmetic Functions 113

2.22 SPICE Compatibility Functions 115
2.23 Analog Device Quick Reference. 122
2.23 Analog Device Quick Reference. 123
2.24 Features Supported by Xyce Device Models 124
2.25 Capacitor Device Instance Parameters 132
2.26 Capacitor Device Model Parameters 133
2.27 Inductor Device Instance Parameters 137
2.28 Inductor Device Model Parameters 137
2.29 Nonlinear Mutual Inductor Device Model Parameters 139
2.30 Resistor Device Instance Parameters 147
2.31 Resistor Device Model Parameters 147
2.32 Resistor Device Instance Parameters 148
2.33 Resistor Device Model Parameters 149
2.34 Diode Device Instance Parameters 152
2.35 Diode Device Model Parameters 152
2.36 JUNCAP200 Diode Device Instance Parameters 153
2.37 JUNCAP200 Diode Device Model Parameters 153
2.38 Pulse Parameters 161
2.39 Sine Parameters 161
2.40 Exponent Parameters 161
2.41 Piecewise Linear Parameters 162
2.42 Frequency Modulated Parameters 164
2.43 Pulse Parameters 166
2.44 Sine Parameters 166
2.45 Exponent Parameters 166
2.46 Piecewise Linear Parameters 167

2.47 Frequency Modulated Parameters 169
2.48 Bipolar Junction Transistor Device Instance Parameters 183
2.49 Bipolar Junction Transistor Device Model Parameters 183
2.50 VBIC 3T et cf v1.2 Device Instance Parameters 185
2.51 VBIC 3T et cf v1.2 Device Model Parameters 186
2.52 VBIC 1.3 3T Device Instance Parameters 190
2.53 VBIC 1.3 3T Device Model Parameters 190
2.54 VBIC 1.3 4T Device Instance Parameters 195
2.55 VBIC 1.3 4T Device Model Parameters 195
2.56 FBH HBT_X v2.1 Device Instance Parameters 200
2.57 FBH HBT_X v2.1 Device Model Parameters 200
2.58 HICUM L0 v1.32 Device Instance Parameters 203
2.59 HICUM L0 v1.32 Device Model Parameters 203
2.60 HICUM v2.34 Device Model Parameters 207
2.61 MEXTRAM 504.12.1 Device Instance Parameters 212
2.62 MEXTRAM 504.12.1 Device Model Parameters 212
2.63 MEXTRAM 504.12.1 with self heating Device Instance Parameters 216
2.64 MEXTRAM 504.12.1 with self heating Device Model Parameters 216
2.65 JFET Device Instance Parameters 221
2.66 JFET Device Model Parameters 221
2.67 JFET Device Instance Parameters 222
2.68 JFET Device Model Parameters 222
2.69 MESFET Device Instance Parameters 225
2.70 MESFET Device Model Parameters 225
2.71 MOSFET level 1 Device Instance Parameters 239
2.72 MOSFET level 1 Device Model Parameters 239

2.73 MOSFET level 2 Device Instance Parameters 241
2.74 MOSFET level 2 Device Model Parameters 241
2.75 MOSFET level 3 Device Instance Parameters 243
2.76 MOSFET level 3 Device Model Parameters 243
2.77 MOSFET level 6 Device Instance Parameters 245
2.78 MOSFET level 6 Device Model Parameters 245
2.79 BSIM3 Device Instance Parameters 247
2.80 BSIM3 Device Model Parameters 248
2.81 BSIM3 SOI Device Instance Parameters 261
2.82 BSIM3 SOI Device Model Parameters 262
2.83 BSIM4 Device Instance Parameters 283
2.84 BSIM4 Device Model Parameters 284
2.85 Power MOSFET Device Instance Parameters 310
2.86 Power MOSFET Device Model Parameters 310
2.87 BSIM6 Device Instance Parameters 314
2.88 BSIM6 Device Model Parameters 315
2.89 PSP102VA legacy MOSFET 102.5 Device Instance Parameters 344
2.90 PSP102VA legacy MOSFET 102.5 Device Model Parameters 345
2.91 PSP103VA MOSFET Device Instance Parameters 357
2.92 PSP103VA MOSFET Device Model Parameters 358
2.93 BSIM-CMG FINFET v110.0.0 Device Instance Parameters 390
2.94 BSIM-CMG FINFET v110.0.0 Device Model Parameters 391
2.95 BSIM-CMG FINFET v107.0.0 Device Instance Parameters 426
2.96 BSIM-CMG FINFET v107.0.0 Device Model Parameters 427
2.97 MVS ETSOI 2.0.0 Device Model Parameters 457
2.98 MVS HEMT 2.0.0 Device Model Parameters 457

2.99 EKV3 MOSFET Device Instance Parameters 459
2.100 EKV3 MOSFET Device Model Parameters 459
2.101 Lossy Transmission Line Device Model Parameters 467
2.102 Controlled Switch Device Model Parameters 470
2.103 Ideal Transmission Line Device Instance Parameters 473
2.104 Lumped Transmission Line Device Instance Parameters 475
2.105 Lumped Transmission Line Device Model Parameters 476
2.106 Behavioral Digital Device Instance Parameters 478
2.107 Behavioral Digital Device Model Parameters 479
2.108 DFF Truth-Table for DIGINITSTATE=3 481
2.109 DLTCH Truth-Table for DIGINITSTATE=3 481
2.110 JKFF Truth-Table for DIGINITSTATE=3 481
2.111 Behavioral Digital Device Instance Parameters 483
2.112 Behavioral Digital Device Model Parameters 484
2.113 PowerGridBranch Device Instance Parameters 489
2.114 PowerGridBusShunt Device Instance Parameters 491
2.115 PowerGridTransformer Device Instance Parameters 493
2.116 PowerGridGenBus Device Instance Parameters 495
2.117 MemristorTEAM Device Instance Parameters 503
2.118 MemristorTEAM Device Model Parameters 503
2.119 MemristorYakopcic Device Instance Parameters 504
2.120 MemristorYakopcic Device Model Parameters 504
2.121 MemristorPEM Device Instance Parameters 505
2.122 MemristorPEM Device Model Parameters 505
2.123 PDE Device Model Parameters 509
2.124 1D PDE (level 1) Device Instance Parameters 509

2.125 2D PDE (level 2) Device Instance Parameters 513
2.126 LAYER Composite Parameters 515
2.127 NODE Composite Parameters 515
2.128 NODE Composite Parameters 516
2.129 DOPINGPROFILES Composite Parameters 516
2.130 REGION Composite Parameters 517
2.131 Description of the flatx, flaty doping parameters 518
2.132 Intrinsic Carrier Concentration Parameters 520
2.133 Bandgap constants 520
2.133 Bandgap constants 521
2.134 Analytic Mobility Parameters 523
2.135 Arora Mobility Parameters 524
2.136 Carrier-Carrier Mobility Parameters 526
2.137 Lombardi Surface Mobility Parameters 528
2.138 Material workfunction values 533
2.139 Electron affinities 533

3.1 List of **Xyce** command line arguments. 537

6.1 Incompatibilities with PSpice. 548
6.2 Incompatibilities with Other Circuit Simulators. 550

7.1 Issues for Microsoft Windows. 555

8.1 **Xyce** ASCII rawfile format. 557
8.2 **Xyce** binary rawfile format. 558

1. Introduction

Welcome to **Xyce**

The **Xyce** Parallel Electronic Simulator has been written to support, in a rigorous manner, the simulation needs of the Sandia National Laboratories electrical designers. It is targeted specifically to run on large-scale parallel computing platforms but also runs well on a variety of architectures including single processor workstations. It also aims to support a variety of devices and models specific to Sandia needs.

1.1 Overview

This document is intended to complement the **Xyce** Users' Guide [1] . It contains comprehensive, detailed information about a number of topics pertinent to the usage of **Xyce**. Included in this document is a netlist reference for the input-file commands and elements supported within **Xyce**; a command line reference, which describes the available command line arguments for **Xyce**; and quick-references for users of other circuit codes, such as Orcad's PSpice [2].

1.2 How to Use this Guide

This guide is designed so you can quickly find the information you need to use **Xyce**. It assumes that you are familiar with basic Unix-type commands, how Unix manages applications and files to perform routine tasks (e.g., starting applications, opening files and saving your work). Note that while Windows versions of **Xyce** are available, they are command-line programs meant to be run under the *Command Prompt*, and are used almost identically to their Unix counterparts.

Typographical conventions

Before continuing in this Reference Guide, it is important to understand the terms and typographical conventions used. Procedures for performing an operation are generally indicated with the following typographical conventions.

Notation	Example	Description
`Typewriter text`	`mpirun -np 4`	Commands entered from the keyboard on the command line or text entered in a netlist.
Bold Roman Font	Set nominal temperature using the **TNOM** option.	SPICE-type parameters used in models, etc.
Gray Shaded Text	DEBUGLEVEL	Feature that is designed primarily for use by **Xyce** developers.
`[text in brackets]`	`Xyce [options] <netlist>`	Optional parameters.
`<text in angle brackets>`	`Xyce [options] <netlist>`	Parameters to be inserted by the user.
`<object with asterisk>*`	`K1 <ind. 1> [<ind. n>*]`	Parameter that may be multiply specified.
`<TEXT1|TEXT2>`	`.PRINT TRAN` `+ DELIMITER=<TAB|COMMA>`	Parameters that may only take specified values.

Table 1.1: **Xyce** typographical conventions.

2. Netlist Reference

Chapter Overview

This chapter contains reference material directed towards working with circuit analyses in **Xyce** using the netlist interface. Included are detailed command descriptions, start-up option definitions and a list of devices supported by the **Xyce** netlist interface.

2.1 Netlist Commands

This section outlines the netlist commands that can be used with **Xyce** to setup and control circuit analysis.

2.1.1 .AC (AC Analysis)

Calculates the frequency response of a circuit over a range of frequencies.

The .AC command can specify a linear sweep, decade logarithmic sweep, or octave logarithmic sweep.

General Form

```
.AC <sweep type> <points value>
+ <start frequency value> <end frequency value>
```

Examples

```
.AC LIN 101 100Hz 200Hz
.AC OCT 10 1kHz 16kHz
.AC DEC 20 1MEG 100MEG
```

Arguments and Options

`sweep type`
: Must be `LIN`, `OCT`, or `DEC`, as described below.

`LIN` Linear sweep
: The sweep variable is swept linearly from the starting to the ending value.

`OCT` Sweep by octaves
: The sweep variable is swept logarithmically by octaves.

`DEC` Sweep by decades
: The sweep variable is swept logarithmically by decades.

`points value`
: Specifies the number of points in the sweep, using an integer.

`start frequency value`
`end frequency value`
: The end frequency value must not be less than the start frequency value, and both must be greater than zero. The whole sweep must include at least one point.

Comments

AC analysis is a linear analysis. The simulator calculates the frequency response by linearizing the circuit around the bias point.

A `.PRINT AC` must be used to get the results of the AC sweep analysis. See Section 2.1.23.

2.1.2 .DC (DC Sweep Analysis)

Calculates the operating point for the circuit for a range of values. Primarily, this capability is applied to independent voltage sources, but it can also be applied to most device parameters. Note that this may be repeated for multiple sources in the same .DC line.

The .DC command can specify a linear sweep, decade logarithmic sweep, octave logarithmic sweep, or a list of values.

Linear Sweeps

General Form

```
.DC [LIN] <sweep variable name> <start> <stop> <step>
+ [<sweep variable name> <start> <stop> <step>]*
```

Examples

```
.DC LIN V1 5 25 5
.DC VIN -10 15 1
.DC R1 0 3.5 0.05 C1 0 3.5 0.5
```

Comments

A .PRINT DC must be used to get the results of the DC sweep analysis. See Section 2.1.23.

A .OP comand will result in a linear DC analysis if there is no .DC specified.

Decade Sweeps

General Form

```
.DC DEC <sweep variable name> <start> <stop> <points>
+ [DEC <sweep variable name> <start> <stop> <points>]*
```

Examples

```
.DC DEC VIN 1 100 2
.DC DEC R1 100 10000 3 DEC VGS 0.001 1.0 2
```

Octave Sweeps

General Form

```
.DC OCT <sweep variable name> <start> <stop> <points>
+ [OCT <sweep variable name><start> <stop> <points>]...
```

Examples

```
.DC OCT VIN 0.125 64 2
.DC OCT R1 0.015625 512 3 OCT C1 512 4096 1
```

List Sweeps

General Form

```
.DC <sweep variable name> LIST <val> <val> <val>*
+ [ <sweep variable name> LIST <val> <val>* ]*
```

Examples

```
.DC VIN LIST 1.0 2.0 5.0 6.0 10.0
.DC VDS LIST 0 3.5 0.05 VGS LIST 0 3.5 0.5
.DC TEMP LIST 10.0 15.0 18.0 27.0 33.0
```

2.1.3 `.DCVOLT` (Initial Condition, Bias point)

The `.DCVOLT` sets initial conditions for an operating point calculation. It is identical in function to the `.IC` command. See section 2.1.10 for detailed guidance.

2.1.4 .END (End of Circuit)

Marks the end of netlist file.

2.1.5 .ENDS (End of Subcircuit)

Marks the end of a subcircuit definition.

2.1.6 .FOUR (Fourier Analysis)

Performs Fourier analysis of transient analysis output.

General Form

```
.FOUR <freq> <ov> [ov]*
```

Examples

```
.FOUR 100K v(5)
.FOUR 1MEG v(5,3) v(3)
```

Arguments and Options

`freq`
: The fundamental frequency used for Fourier analysis. Fourier analysis is performed over the last period (`1/freq`) of the transient simulation. The DC component and the first nine harmonics are calculated.

`ov`
: The desired solution variable, or variables, to be analyzed. Fourier analysis can be performed on several solution variables for each fundamental frequency, `freq`. At least one solution variable must be specified in the `.FOUR` line. The available solution variables are:

- `V(<circuit node>)` the voltage at `<circuit node>`
- `V(<circuit node>,<circuit node>)` to output the voltage difference between the first `<circuit node>` and second `<circuit node>`
- `I(<device>)` the current through a two terminal device
- `I<lead abbreviation>(<device>)` the current into a particular lead of a three or more terminal device (see the Comments, below, for details)
- `N(<device parameter>)` a specific device parameter (see the individual devices in Section 2.3 for syntax)

Comments

Multiple `.FOUR` lines may be used in a netlist. All results from Fourier analysis will be returned to the user in a file with the same name as the netlist file suffixed with a `.FOUR`.

`<lead abbreviation>` is a single character designator for individual leads on a device with three or more leads. For bipolar transistors these are: c (collector), b (base), e (emitter), and s (substrate). For mosfets, lead abbreviations are: d (drain), g (gate), s (source), and b (bulk). SOI transistors have: d, g, s, e (bulk), and b (body). For PDE devices, the nodes are numbered according to the order they appear, so lead currents are referenced like I1(`<device>`), I2(`<device>`), etc.

2.1.7 .FUNC (Function)

User defined functions that can be used in expressions appearing later in the same scope as the .FUNC statement.

General Form

```
.FUNC <name>([arg]*) {<body>}
```

Examples

```
.FUNC E(x) {exp(x)}
.FUNC DECAY(CNST) {E(-CNST*TIME)}
.FUNC TRIWAV(x) {ACOS(COS(x))/3.14159}
.FUNC MIN3(A,B,C) {MIN(A,MIN(B,C))}
```

Arguments and Options

name
: Function name. Functions cannot be redefined and the function name must not be the same as any of the predefined functions (e.g., SIN and SQRT).

arg
: The arguments to the function. .FUNC arguments cannot be node names. The number of arguments in the use of a function must agree with the number in the definition. Parameters, TIME, and other functions are allowed in the body of function definitions. Two constants EXP and PI cannot be used a argument names. These constants are equal to e and π, respectively, and cannot be redefined.

body
: May refer to other (previously defined) functions; the second example, DECAY, uses the first example, E.

Comments

The <body> of a defined function is handled in the same way as any math expression; it must be enclosed in curly braces .

The scoping rules for functions are:

- If a .FUNC, statement is included in the main circuit netlist, then it is accessible from the main circuit and all subcircuits.
- .FUNC statements defined within a subcircuit are scoped to that subciruit definition. So, their functions are only accessible within that subcircuit definition, as well as within "nested subcircuits" also defined within that subcircuit definition.

Additional illustative examples of scoping are given in the "Working with Subcircuits and Models" section of the **Xyce** Users' Guide [1] .

2.1.8 .GLOBAL_PARAM (Global parameter)

User-defined global parameter, which can be time dependent, or can be used in .STEP loops.

General Form

```
.GLOBAL_PARAM [<name>=<value>]*
```

Examples

```
.GLOBAL_PARAM T={27+100*time}
```

```
name
    Name of the global parameter.

value
    Global parameter value.  An expression is used for the value
    when specified within curly braces ({}).
```

Comments

You may use parameters defined by .PARAM in expressions used to define global parameters, but you may *not* use global parameters in .PARAM definitions.

Unlike .PARAM parameters, global parameters are evaluated at the time they are needed. They may, therefore, be time dependent, and may depend on other time dependent quantities in the circuit.

Global parameters are accessible, and have the same value, throughout all levels of the netlist hierarchy. It is not legal to redefine global parameters in different levels of the netlist hierarchy.

2.1.9 .HB (Harmonic Balance Analysis)

Calculates steady states of nonlinear circuits in the frequency domain.

General Form

```
.HB <fundamental frequencies>
```

Examples

```
.HB 1e4
.hb 1e4 2e2
```

Arguments and Options

`fundamental frequencies`
: Sets the fundamental frequencies for the analysis.

Comments

Harmonic balance analysis calculates the magnitude and phase of voltages and currents in a nonlinear circuit. Use a `.OPTIONS HBINT` statement to set additional harmonic balance analysis options.

The `.PRINT HB` statement must be used to get the results of the harmonic balance analysis. See section 2.1.23.

2.1.10 .IC (Initial Condition, Bias point)

The .IC/.DCVOLT command sets initial conditions for operating point calculations. These operating point conditions will be enforced the entire way through the nonlinear solve. Initial conditions can be given for some or all of the circuit nodes.

As the conditions are enforced for the entire solve, only the nodes not specified with .IC statements will change over the course of the operating point calculation.

Note that it is possible to specify conditions that are not solvable. Consult the **Xyce** User's Guide for more guidance.

General Form

```
.IC V(<node>)=<value>
.IC <node> <value>
.DCVOLT V(<node>)=<value>
.DCVOLT <node> <value>
```

Examples

```
.IC V(2)=3.1
.IC 2 3.1
.DCVOLT V(2)=3.1
.DCVOLT 2 3.1
```

Comments

The .IC capability can only set voltage values, not current values.

The .IC capability can not be used, within subcircuits, to set voltage values on global nodes.

2.1.11 `.INC` or `.INCLUDE` (Include file)

Include specified file in netlist.

The file name can be surrounded by double quotes, ”filename”, but this is not necessary. The directory for the include file is assumed to be the execution directory unless a full or relative path is given as a part of the file name.

General Form

```
.INC <include file name>
.INCLUDE <include file name>
```

Examples

```
.INC models.lib
.INC "models.lib"
.INCLUDE models.lib
.INCLUDE "path_to_library/models.lib"
```

2.1.12 .LIB (Library file)

The .LIB command is similar to .INCLUDE, in that it brings in an external file. However, it is designed to only bring in specific parts of a library file, as designated by an entry name. Note that the **Xyce** version of .LIB has been designed to be compatible with HSPICE [3], not PSpice [4].

There are two forms of the .LIB statement, the call and the definition. The call statement reads in a specified subset of a library file, and the definition statement defines the subsets.

.LIB call statement

General Form

```
.LIB <file name> <entry name>
```

Examples

```
.LIB models.lib nom
.LIB "models.lib"  low
.LIB "path/models.lib"  high
```

Arguments and Options

`file name`
: Name of file containing netlist data. Double quotes (") may be used around the file name.

`entry name`
: Entry name, which determines the section of the file to be included. These sections are defined in the included file using the definition form of the .LIB statement.

The library file name can be surrounded by double quotes, as in ”path/filename” but this is not necessary. The directory for the library file is assumed to be the execution directory unless a full or relative path is given as a part of the file name. The section name denotes the section or sections of the library file to include.

.LIB definition statement

The format given above is when the .LIB command is used to reference a library file; however, it is also used as part of the syntax in a library file.

General Form

```
.LIB <entry name>
<netlist lines>*
.endl <entry name>
```

Examples

```
* Library file res.lib
.lib low
```

```
.param rval=2
r3  2  0  9
.endl low

.lib nom
.param rval=3
r3  2  0  8
.endl nom
```

Arguments and Options

`entry name`
: The name to be used to identify this library component. When used on a `.LIB` call line, these segments of the library file will be included in the calling file.

Note that for each entry name, there is a matched `.lib` and `.endl`. Any valid netlist commands can be placed inside the `.lib` and `.endl` statements. The following is an example calling netlist, which refers to the library in the examples above:

```
* Netlist file res.cir
V1  1   0   1
R   1   2   {rval}
.lib res.lib nom
.tran 1 ps 1ns
.end
```

In this example, only the netlist commands that are inside of the “nom” library will be parsed, while the commands inside of the “low” library will be discarded. As a result, the value for resistor r3 is 8, and the value for rval is 3.

2.1.13 .MEASURE (Measure output)

The .MEASURE statement allows calculation or reporting of simulation metrics to an external file, as well as to the standard output and/or a log file. One can measure when simulated signals reach designated values, or when they are equal to other simulation values. The .MEASURE statement is only supported for .TRAN analyses and .STEP when used with a .TRAN.

The syntaxes for the .MEASURE statements are as follows:

General Form

```
.MEASURE TRAN <result name> AVG <variable>
+ [MIN_THRESH=<value>] [MAX_THRESH=<value>]
+ [FROM=<time>] [TO=<time>] [TD=<time>]
+ [RISE=r|LAST] [FALL=f|LAST] [CROSS=c|LAST] [RFC_LEVEL=<value>]
+ [DEFAULT_VAL=<value>] [PRECISION=<value>] [PRINT=<value>]

.MEASURE TRAN <result name> DERIV <variable> AT=<value>
+ [MINVAL=<value>] [DEFAULT_VAL=<value>]
+ [PRECISION=<value>] [PRINT=<value>]

.MEASURE TRAN <result name> DERIV <variable>
+ WHEN <variable>=<variable2>|<value>
+ [MINVAL=<value>] [FROM=<value>] [TO=<value>] [TD=<value>]
+ [RISE=r|LAST] [FALL=f|LAST] [CROSS=c|LAST] [RFC_LEVEL=<value>]
+ [DEFAULT_VAL=<value>] [PRECISION=<value>] [PRINT=<value>]

.MEASURE TRAN <result name> DUTY <variable>
+ [ON=<value>] [OFF=<value>] [MINVAL=<value>]
+ [FROM=<value>] [TO=<value>] [TD=<value>]
+ [RISE=r|LAST] [FALL=f|LAST] [CROSS=c|LAST] [RFC_LEVEL=<value>]
+ [DEFAULT_VAL=<value>] [PRECISION=<value>] [PRINT=<value>]

.MEASURE TRAN <result name> EQN <expression>
+ [FROM=<value>] [TO=<value>] [TD=<value>]
+ [DEFAULT_VAL=<value>] [PRECISION=<value>] [PRINT=<value>]

.MEASURE TRAN <result name> ERROR <variable> FILE=<value>
+ INDEPVARCOL=<value> DEPVARCOL=<value> [COMP_FUNCTION=<value>]

.MEASURE TRAN <result name> FIND <variable>
+ WHEN <variable>=<variable2>|<value>
+ [FROM=<value>] [TO=<value>] [TD=<value>]
+ [RISE=r|LAST] [FALL=f|LAST] [CROSS=c|LAST] [RFC_LEVEL=<value>]
+ [MINVAL=<value>] [DEFAULT_VAL=<value>]
+ [PRECISION=<value>] [PRINT=<value>]

.MEASURE TRAN <result name> FOUR <variable> AT=freq
+ [NUMFREQ=<value>] [GRIDSIZE=<value>]
```

```
+ [FROM=<value>] [TO=<value>] [TD=<value>]
+ [DEFAULT_VAL=<value>] [PRECISION=<value>] [PRINT=<value>]

.MEASURE TRAN <result name> FREQ <variable>
+ [ON=<value>] [OFF=<value>] [MINVAL=<value>]
+ [FROM=<value>] [TO=<value>] [TD=<value>]
+ [DEFAULT_VAL=<value>] [PRECISION=<value>] [PRINT=<value>]

.MEASURE TRAN <result name> INTEG <variable>
+ [FROM=<value>] [TO=<value>] [TD=<value>]
+ [RISE=r|LAST] [FALL=f|LAST] [CROSS=c|LAST] [RFC_LEVEL=<value>]
+ [DEFAULT_VAL=<value>] [PRECISION=<value>] [PRINT=<value>]

.MEASURE TRAN <result name> MAX <variable>
+ [FROM=<value>] [TO=<value>] [TD=<value>]
+ [RISE=r|LAST] [FALL=f|LAST] [CROSS=c|LAST] [RFC_LEVEL=<value>]
+ [DEFAULT_VAL=<value>] [PRECISION=<value>]
+ [PRINT=<value>] [OUTPUT=<value>]

.MEASURE TRAN <result name> MIN <variable>
+ [FROM=<value>] [TO=<value>] [TD=<value>]
+ [RISE=r|LAST] [FALL=f|LAST] [CROSS=c|LAST] [RFC_LEVEL=<value>]
+ [DEFAULT_VAL=<value>] [PRECISION=<value>]
+ [PRINT=<value>] [OUTPUT=<value>]

.MEASURE TRAN <result name> OFF_TIME <variable>
+ [OFF=<value>] [MINVAL=<value>]
+ [FROM=<value>] [TO=<value>] [TD=<value>]
+ [DEFAULT_VAL=<value>] [PRECISION=<value>] [PRINT=<value>]

.MEASURE TRAN <result name> ON_TIME <variable>
+ [ON=<value>] [MINVAL=<value>]
+ [FROM=<value>] [TO=<value>] [TD=<value>]
+ [DEFAULT_VAL=<value>] [PRECISION=<value>] [PRINT=<value>]

.MEASURE TRAN <result name> PP <variable>
+ [FROM=<value>] [TO=<value>] [TD=<value>]
+ [RISE=r|LAST] [FALL=f|LAST] [CROSS=c|LAST] [RFC_LEVEL=<value>]
+ [DEFAULT_VAL=<value>] [PRECISION=<value>] [PRINT=<value>]

.MEASURE TRAN <result name> RMS <variable>
+ [FROM=<value>] [TO=<value>] [TD=<value>]
+ [RISE=r|LAST] [FALL=f|LAST] [CROSS=c|LAST] [RFC_LEVEL=<value>]
+ [DEFAULT_VAL=<value>] [PRECISION=<value>] [PRINT=<value>]

.MEASURE TRAN <result name> WHEN <variable>=<variable2>|<value>
+ [FROM=<value>] [TO=<value>] [TD=<value>]
+ [RISE=r|LAST] [FALL=f|LAST] [CROSS=c|LAST] [RFC_LEVEL=<value>]
```

```
+ [MINVAL=<value>] [DEFAULT_VAL=<value>]
+ [PRECISION=<value>] [PRINT=<value>]

.MEASURE TRAN <result name> TRIG <variable>=<variable2>|<value>
+ [RISE=r1|LAST] [FALL=f1|LAST] [CROSS=c1|LAST]
+ TARG <variable3>=<variable4>|<value>
+ [RISE=r2|LAST] [FALL=f2|LAST] [CROSS=c2|LAST]
+ [FROM=<value>] [TO=<value>] [TD=<value>]
+ [DEFAULT_VAL=<value>] [PRECISION=<value>] [PRINT=<value>]

.MEASURE TRAN <result name> TRIG AT=<value>
+ TARG <variable2>=<variable3>|<value>
+ [RISE=r2|LAST] [FALL=f2|LAST] [CROSS=c2|LAST]
+ [FROM=<value>] [TO=<value>] [TD=<value>]
+ [DEFAULT_VAL=<value>] [PRECISION=<value>] [PRINT=<value>]
```

Examples

```
.MEASURE TRAN hit1_75 WHEN V(1)=0.75 MINVAL=0.02
.MEASURE TRAN hit2_75 WHEN V(1)=0.75 MINVAL=0.08 RISE=2
.MEASURE TRAN avgAll AVG V(1)
.MEASURE TRAN dutyAll DUTY V(1) ON=0.75 OFF=0.25
```

Arguments and Options

`result name`

Measured results are reported to the output and log file. Additionally results are stored in a file called `circuitFileName.mt#`, where the suffixed number (`#` starts at `0` and increases for multiple iterations (`.STEP`) iterations) of a given simulation. Each line of this file will contain the measurement name, `<result name>`, followed by its value for that run. The `<result name>` must be a legal **Xyce** character string.

`measure type`

`AVG, DERIV, DUTY, EQN, ERROR, FREQ, FOUR, INTEG, MAX, MIN, OFF_TIME, ON_TIME, PP, RMS, WHEN, TRIG, TARG`

The third argument specifies the type of measurement or calculation to be done. The only exception is the `TARG` clause which comes later in the argument list, after the `TRIG` clause has been specified.

By default, the measurement is perfomed over the entire simulation. The calculations can be limited to a specific measurement window by using the qualifiers `FROM`, `TO`, `TD`, `RISE`, `FALL`, `CROSS` and `MINVAL`, which are explained below.

The supported measure types and their definitions are:

`AVG` Computes the arithmetic mean of `<variable>` for the simulation, or within the extent of the measurement window. The qualifiers

FROM, TO, TD, RISE, FALL and CROSS can be used to limit the measurement window.

DERIV Computes the derivative of <variable> at a user-specified time (by using the AT qualifier) or when a user-specified condition occurs (by using the WHEN qualifier). If the WHEN qualifier is used then the measurement window can be limited with the qualifiers FROM, TO, TD, RISE, FALL and CROSS. The MINVAL qualifier is used as a comparison tolerance for both AT and WHEN. For HSpice compatibility, DERIVATIVE is an allowed synonym for DERIV.

DUTY Fraction of time that <variable> is greater than ON and does not fall below OFF either for the entire simulation, or the measurement window. The qualifier MINVAL is used as a tolerance on the ON and OFF values, so that the thresholds become (ON − MINVAL) and (OFF − MINVAL). The temporal measurement window can be limited with the qualifiers FROM, TO, TD, RISE, FALL and CROSS

EQN Calculates the value of <expression> during the simulation. The measurement window can be limited with the qualifiers FROM, TO and TD. As noted in the "Additional Examples" subsection, the expression can use the results of other measure statements.

ERROR Calculates the norm between the measured waveform and a "comparison waveform" specified in a file. The supported norms are L1, L2 and INFNORM. The default norm is the L2 norm.

FIND-WHEN Returns the value of <variable> at the time when the WHEN clause is satisfied. The WHEN clause is described in more detail later in this list.

FOUR Calculates the fourier transform of the transient waveform for <variable>, given the fundamental frequency AT. All frequencies output by the measure will be multiples of that fundamental frequency, and will always start at that fundamental frequency. The values of the DC component and the first NUMFREQ-1 harmonics are determined using an interpolation of GRIDSIZE points. The default values for NUMFREQ and GRIDSIZE are 10 and 200, respectively. The measurement window can be limited with the qualifiers FROM, TO and TD.

FREQ An estimate of the frequency of <variable>, found by cycle counting during the simulation. Cycles are defined through the values of ON and OFF with MINVAL being used as a tolerance so that the thresholds becomes (ON − MINVAL) and (OFF + MINVAL).

INTEG Calculates the integral of outVal through second order numerical integration. The integration window can be limited with the qualifiers FROM, TO, TD, RISE, FALL and CROSS. For HSpice compatibility, INTEGRAL is an allowed synonym for INTEG.

MAX Returns the maximum value of <variable> during the simulation. The measurement window can be limited with the qualifiers FROM, TO, TD, RISE, FALL and CROSS.

MIN Returns the minimum value of <variable> during the simulation. The measurement window can be limited with the qualifiers FROM,

TO, TD, RISE, FALL and CROSS.

OFF_TIME Returns the time that <variable> is below OFF during the simulation or measurement window, normalized by the number of cycles of the waveform during the simulation or measurement window. OFF uses MINVAL as a tolerance, and the threshold becomes (OFF + MINVAL). The measurement window can be limited with the qualifiers FROM, TO and TD.

ON_TIME Returns the time that <variable> is above ON during the simulation or measurement window, normalized by the number of cycles of the waveform during the simulation or measurement window. ON uses MINVAL as a tolerance, and the threshold becomes (ON − MINVAL). The measurement window can be limited with the qualifiers FROM, TO and TD.

PP Returns the difference between the maximum value and the minimum value <variable> during the simulation. The measurement window can be limited with the qualifiers FROM, TO, TD, RISE, FALL and CROSS.

RMS Computes the root-mean-squared value of <variable> during the simulation. The measurement window can be limited with the qualifiers FROM, TO, TD, RISE, FALL and CROSS.

TRIG

TARG Measures the time between a trigger event and a target event. The trigger is specified with TRIG <variable>=<variable$_2$> or TRIG <variable>=<value> or TRIG AT=<value>. Likewise, the the target is specified as TARG <variable$_3$>=<variable$_4$> or TRIG <variable$_3$>=<value>. It is also possible to use this measure to find a rise time for variable when the rise time is defined as the time to go from some small fraction of the maxima to some other fraction of the maxima. For example, the syntax for finding a rise time from 10% to 90% of the maxima is:

```
TRIG V(node) FRAC_MAX=0.1 TARG V(node) FRAC_MAX=0.9
```

WHEN Returns the time when <variable> reaches <variable$_2$> or the constant value, value. The time over which the value is searched can be limited by the qualifiers TO, FROM, TD, RISE, FALL and CROSS. The qualifier MINVAL acts as a tolerance for the comparison. For example when <variable$_2$> is specified, the comparison used is when <variable> = <variable$_2$> ± MINVAL or when a constant, value is given: <variable> = value ± MINVAL. If the conditions specified for finding a given value were not found during the simulation then the measure will return the default value of -1. The user may change this default value with the DEFAULT_VAL qualifier described below. Note: The use of FIND and WHEN in one measure statement is also supported.

variable

variable$_n$

value

These quantities represents the test for the stated measurement. <variable>

is a simulation quantity, such as a voltage or current. One can compare it to another simulation variable or a fixed quantity. Additionally, the `<variable>` may be a **Xyce** expression deliminted by { } brackets. As noted above, an example is `V(1)=0.75`

`AT=value`
: A time *at which* the measurement calculation will occur. This is used by the `DERIV` measure and the `TRIG` clause. Note that ill-considered use of the `FROM`, `TO`, `TD` and `AT` qualifiers in the same `TRIG-TARG` measure statement can cause an empty measurement window, and thus a failed measure.

`FROM=value`
: A time *after which* the measurement calculation will start.

`TO=value`
: A time *at which* the measurement calculation will stop.

`TD=value`
: A time delay before which this measurement should be taken or checked. Note that ill-considered use of both `FROM` and `TO` qualifiers and a `TD` qualifier in the same measure statement can cause an empty measurement window, and thus a failed measure.

`MIN_THRESH=value`
: A minimum threshold value above which the measurement calculation will be done and below which it will not be done. This is only used by the `AVG` measure.

`MAX_THRESH=value`
: A maximum threshold value above which the measurement calculation will not be done and below which it will be done. This is only used by the `AVG` measure.

`RISE=r|LAST`
: The number of rises after which the measurement should be checked. If `LAST` is specified, then the last rise found in the simulation will be used. It is recommended that only one of the qualifiers `RISE`, `FALL` or `CROSS` be used in a given measure statement. The exception is `TRIG-TARG` measures. In that case, different `RISE`, `FALL` and `CROSS` criteria can be specified for `TRIG` and `TARG`.

`FALL=f|LAST`
: The number of falls after which the measurement should be checked. If `LAST` is specified, then the last fall found in the simulation will be used.

`CROSS=c|LAST`
: The number of zero crossings after which the measurement should be checked. If `LAST` is specified, then the last zero crossing found in the simulation will be used.

RFC_LEVEL=value

The level used to calculate rises, falls and crosses when the "level-crossing" mode is used. Its usage is discussed further in the subsection on "Rise, Fall and Cross Qualifiers". RFC_LEVEL is used by the AVG, DERIV, DUTY, FIND-WHEN, INTEG, MAX, MIN, PP, RMS and WHEN measures.

MINVAL=value

An allowed difference between outVal and the variable to which it is being compared. This has a default value of 1.0e-12. One may need to specify a larger value to avoid missing the test condition in a transient run. MINVAL is used by the DERIV, DUTY, FREQ, OFF_TIME and ON_TIME and WHEN measures. The descriptions of those measures detail how MINVAL is used by each measure.

FRAC_MAX=value

A fractional value of the maximum value of <variable>. This is useful for ensemble runs where the maximum value of a waveform is not known in advance. FRAC_MAX is used by the TRIG and TARG measures.

ON=value

The value at which a signal is considered to be "on" for FREQ, DUTY and ON_TIME measure calculations. This has a default value of 0.

OFF=value

The value at which a signal is considered to be "off" for FREQ, DUTY and ON_TIME measure calculations. This has a default value of 0.

DEFAULT_VAL=value

If the conditions specified for finding a given value are not found during the simulation then the measure will return the default value of -1 in the circuitFileName.mt# files. The measure value in the standard output or log file will be FAILED. The default return value for the circuitFileName.mt# files is settable by the user for each measure by adding the qualifier DEFAULT_VAL=<retval> on that measure line. As examples, a measure will fail if the condition specified by a WHEN or AT qualifier is not found. It will also fail if the user specifies a set of FROM, TO and TD values for a given measure that yields an empty measurement interval.

PRECISION=value

The default precision for .MEASURE output is 6 digits after the decimal point. This argument provides a user configurable precision for a given .MEASURE statement that applies to both the .mt# files and standard output.

PRINT=value

This parameter controls where the .MEASURE output appears. The default is ALL, which produces measure output in both the .mt0 file and to standard output. A value of STDOUT only produces measure output to standard output, while a value of NONE suppresses the measure output to both the .mt0 file and standard output. The subsection on

"Suppresing Measure Output" gives examples.

`OUTPUT=value`

This parameter is only supported for the `MAX` and `MIN` measures. The default is `VALUE`. A value of `VALUE` will print the maximum (or minimum) value to the `.mt0` file. A value of `TIME` will print the time of the maximum (or minimum) value to the `.mt0` file. This parameter does not affect the descriptive output that is printed to standard output. The "Additional Examples" subsection gives an example for the `MAX` measure.

`VAL=value`

This parameter is only implemented for the `TRIG` and `TARG` measures. It is not the preferred **Xyce** syntax. It is only supported for HSpice compatibility (see that subsection, below, for details).

`GOAL=value`

This parameter is not implemented in **Xyce**, but is included for compatability with HSPICE netlists.

`WEIGHT=value`

This parameter is not implemented in **Xyce**, but is included for compatability with HSPICE netlists.

`FILE=value`

The filename for the "comparison file" used for the `ERROR` measure. This qualifier is required for the `ERROR` measure.

`INDEPVARCOL=value`

The column index, in the "comparison file", of the independent variable (e.g, the simulation time) used in an `ERROR` measure. This qualifier is required for the `ERROR` measure,, and must be different from the value of the `DEPVARCOL` qualifier. Also, note that the column indices in Xyce output files start with 0.

`DEPVARCOL=value`

The column index, in the "comparison file", of the dependent variable used in an `ERROR` measure. This qualifier is required for the `ERROR` measure, and must be different from the value of the `INDEPVARCOL` qualifier. Also, note that the column indices in Xyce output files start with 0.

`COMP_FUNCTION=value`

This is the norm used by the `ERROR` measure to compare the simulation values for the measured variable with the corresponding values in the "comparison file" specified with the `FILE` qualifier. The allowed values are `L1NORM`, `L2NORM` and `INFNORM`. Any other values will default to `L2NORM`. This qualifier is optional for the `ERROR` measure, and has a default value of `L2NORM`. The descriptive output for each `ERROR` measure, that is printed to standard output, will explicitly state which norm was used for each `ERROR` measure.

Measure Output

A user-defined measure can be output at each time-step via inclusion in a .PRINT command. For example, this netlist excerpt outputs the integral of `V(1)` at each time step. The measure value `TINTV1` is then also output at the end of the simulation.

```
.MEASURE TRAN TINTV1 INTEG V(1)
.PRINT TRAN FORMAT=NOINDEX V(1) TINTV1
```

The output for successful and failed measures to standard output (and log files) provides more information than just the measure's calculated values. As an example, for a successful and failed `MAX` measure the standard output would be:

```
MAXVAL = 0.999758 at time = 0.000249037
Measure Start Time= 0 Measure End Time= 0.001

Netlist warning: MAXFAIL failed. TO value < FROM value
MAXFAIL = FAILED at time = 0
Measure Start Time= 1 Measure End Time= 0.001
```

In general, information on the measurement window, the time(s) that the measure's value(s) were calculated and a possible cause for a failed measure is output to standard output for all measures except for `FOUR`. This information is similar, but not identical, to HSpice's verbose output. For a failed `FOUR` measure, the standard output will have "FAILED", but there may be less information provided as to why the `FOUR` measure failed.

In this example, the `circuitFileName.mt#` file would have the following output:

```
MAXVAL = 0.999758
MAXFAIL = -1
```

Xyce does not support `.DC` or `.AC` measure statements. If they are included in the netlist then **Xyce** will run the netlist and emit warning messages about the unsupported measure statements. **Xyce** does not produce any output for the unsupported `AC` or `DC` measures in either `stdout` or in the `.mt0` file.

Measurement Windows

There is an implicit precedence when multiple qualifiers are specified to limit the measurement window for a given `.MEASURE` statement. In general, **Xyce** first considers the time-window criteria of the `FROM`, `TO` and `TD` qualifiers. If the simulation time is within that user-specified time-window then the `RISE`, `FALL`, `CROSS` are qualifiers are counted and/or the `TRIG`, `TARG` and `WHEN` qualifiers are evaluated.

The following netlist excerpt shows simple examples where the `.MEASURE` statement may return the default value. For `riseSine`, this may occur because `V(1)` never has an output value of 1.0

because of the time steps chosen by **Xyce**. So, careful selection of the threshold values in WHEN, TRIG and TARG clauses may be needed in some cases. For `fallPulseFracMax`, the simulation interval is too short and the `TARG` value of 0.3 for `V(2)` is not reached within the specified one-second simulation time. For `maxSine`, the `FROM`, `TO` and `TD` values yield an empty time interval, which is typically an error in netlist entry.

```
VS  1  0  SIN(0 1.0 0.5 0 0)
VP  2  0  PULSE( 0 10 0.2 0.2 0.2 0.5 2)
R1  1  0  100K
R2  2  0  100K
.TRAN 0  1
.PRINT TRAN FORMAT=NOINDEX V(1) V(2)
.MEASURE TRAN riseSine TRIG V(1)=0 TARG V(1)=1.0
.MEASURE TRAN fallPulseFracMax TRIG V(2) FRAC_MAX=0.97
+ TARG V(2) FRAC_MAX=0.03
.MEASURE TRAN maxSine MAX V(1) FROM=0.2 TO=0.25 TD=0.5
```

The intent in **Xyce** is for the measurement window to be the intersection of the `FROM-TO` and `TD` windows, if both are specified. As noted above, the use of both `FROM-TO` and `TD` windows can lead to an empty measurement window. So, that usage is not recommended.

Re-Measure

Xyce can re-calculate (or re-measure) the values for `.MEASURE` statements using existing **Xyce** output files. This is useful for tuning `.MEASURE` statements to better capture response metrics of a circuit when the underlying simulation runtime is long. To use this functionality, add the command line argument `-remeasure <file>`, where `<file>` is a **Xyce**-generated `.prn`, `.csv` or `.csd` output file.

There are several important limitations with `-remeasure`:

- The data required by the `.MEASURE` statements must have been output in the simulation output file. When using `-remeasure`, **Xyce** does not recalculate the full solution, but uses the data supplied in the output file. Thus, everything a `.MEASURE` statement needs to calculate its results must be in the output file. **Xyce** will not report an error if the needed data is not in the output file.
- Only voltage node values can be used in `.MEASURE` while using `-remeasure`. Lead currents and power values will not be interpreted correctly during a remeasure operation.
- `-remeasure` only works with `.tran` analysis or `.STEP` when used with `.TRAN`.
- `-remeasure` works with `.prn`, `.csv` and `.csd` formatted output data. However, it might only work with `.csv` and `.csd` files generated by **Xyce**.

As an example in using `-remeasure`, consider a netlist called `myCircuit.cir` which had previously been run in **Xyce** and produced the output file `myCircuit.cir.prn`. One could run `-remeasure` with the following command:

```
Xyce -remeasure myCircuit.cir.prn myCircuit.cir
```

RISE, FALL and CROSS Qualifiers

The RISE, FALL and CROSS qualifiers are supported for more measures types, and in more ways, in **Xyce** than in HSpice. This sections explains those differences and supplies some examples. One key difference is that **Xyce** supports two different "modes" for these qualifiers.

The first mode is "level-crossing", where the RISE, FALL and CROSS counts are incremented each time the measured signal (e.g, V(a)) crosses the user-specified level (termed crossVal here). If we define currentVal and lastVal as the current and previous values of V(a), and riseCount, fallCount and crossCount as the number of rises, falls and crosses that have occurred, then the pseudo-code for this mode is:

```
if ( (currentVal-crossVal >= 0.0) AND (lastVal-crossVal < 0.0) )
{
  riseCount++;
}
else if( (currentVal-crossVal) <= 0.0) AND (lastVal-crossVal > 0.0) )
{
  fallCount++;
}
```

For this mode, the crossCount is then incremented if either the riseCount or the fallCount was incremented. This mode should work identically to HSpice for the DERIV, FIND, FIND-WHEN and TRIG-TARG measures if the RFC_LEVEL qualifier is not specified for the DERIV, FIND or FIND-WHEN measures.

The second mode is termed "absolute". In this mode, **Xyce** attempts to auto-detect whether the measured waveform has started a new rise or fall. However, the crossCount is still evaluated against a fixed crossVal of 0. This mode may be useful for pulse waveforms with sharp rises and falls, where the waveform's maximum (or minimum) level is not exactly known in advance. It may not work well with noisy waveforms. If we define two Boolean variables isRising and isFalling then the pseudo-code for this mode is:

```
if( (currentVal > lastVal) AND !isRising )
{
  isRising= true;
  isFalling = false;
  riseCount++;
}
else if( (currentVal < lastVal) AND !isFalling )
{
  isRising = false;
  isFalling = true;
  fallCount++;
```

```
}
if ( ( (currentVal >= 0.0) AND (lastVal < 0.0) ) OR
     ( (currentVal <= 0.0) AND (lastVal > 0.0) ) )
{
  crossCount++;
}
```

The following table shows which of these two modes are supported for which **Xyce** measures.

Table 2.1: RISE, FALL and CROSS Support in .MEASURE.

Measure	Level-Crossing	Absolute
AVG	A fixed crossVal can be set with RFC_LEVEL	Default, if RFC_LEVEL is not set
DERIV	The crossVal is either the value of the WHEN clause, or it can be set to a fixed level with RFC_LEVEL	No
DUTY	A fixed crossVal can be set with RFC_LEVEL	Default, if RFC_LEVEL is not set
FIND-WHEN and WHEN	The crossVal is either the value of the WHEN clause, or it can be set to a fixed level with RFC_LEVEL	No
INTEG	A fixed crossVal can be set with RFC_LEVEL	Default, if RFC_LEVEL is not set
MAX	A fixed crossVal can be set with RFC_LEVEL	Default, if RFC_LEVEL is not set
MIN	A fixed crossVal can be set with RFC_LEVEL	Default, if RFC_LEVEL is not set
PP	A fixed crossVal can be set with RFC_LEVEL	Default, if RFC_LEVEL is not set
RMS	A fixed crossVal can be set with RFC_LEVEL	Default, if RFC_LEVEL is not set
TRIG and TARG	The levels are set separately by the values in the TRIG and TARG clauses	If FRAC_MAX is used

As simple examples of these two modes for the MAX measure, consider the following netlist:

```
*examples of RFC modes
VPWL1  1  0 PWL(0 0 0.2 0.5 0.4 0 0.6 0.75 0.8 0 1.0 0.75 1.2 0.0)
R1  1  0  100
.TRAN 0 1.2s
.MEASURE TRAN MAX1 MAX V(1) RISE=1
.MEASURE TRAN MAX2 MAX V(1) RISE=1 RFC_LEVEL=0.6
.MEASURE TRAN MAX3 MAX V(1) FALL=1 RFC_LEVEL=0.5
.PRINT TRAN V(1) MAX1 MAX2 MAX3
.END
```

The descriptive output to standard output would then be:

```
MAX1 = 5.000000e-01 at time = 2.000000e-01
Measure Start Time= 0.000000e+00        Measure End Time= 1.200000e+00
Rise 1: Start Time= 1.000000e-10        End Time= 4.000000e-01

MAX2 = 7.500000e-01 at time = 6.000000e-01
Measure Start Time= 0.000000e+00        Measure End Time= 1.200000e+00
Rise 1: Start Time= 5.600000e-01        End Time= 9.500000e-01

MAX3 = 7.500000e-01 at time = 1.000000e+00
Measure Start Time= 0.000000e+00        Measure End Time= 1.200000e+00
Fall 1: Start Time= 6.700000e-01        End Time= 1.060000e+00
```

The `MAX1` measure uses the "absolute" mode, so the first rise begins with the very first time-step. The maximum value in that first rise interval for measure `MAX1` then occurs at time=0.2s. The `MAX2` measure uses the "level-crossing" mode with a user-specified `RFC_LEVEL` of 0.6V. So, the first rise interval for the `MAX2` measure begins at time=0.56s, and the maximum value in that first rise interval occurs at time=0.6s. The `MAX3` measure illustrates an important point. A "fall" is not recorded for the `MAX3` measure at t=0.2 seconds, but a "rise" (and "cross") would be recorded, since the value of `V(1)` is exactly equal to the user-specified `RFC_LEVEL`. So, the first fall interval for measure `MAX3` begins at time=0.67s, when V(1) first passes through the user-specified `RFC_LEVEL` of 0.5V.

Additional Examples

Pulse width measurements in **Xyce** can be done as follows, based on this netlist excerpt. This may be useful for ensemble runs, where the maximum value of a one-shot pulse is not known in advance. The first syntax uses three measure statements to measure the 50% pulse width, and works with noisy waveforms. The second syntax uses only one measure statement, but may not always work with noisy waveforms.

```
* pulse-width measurement example 1
.measure tran rise50FracMax trig v(1) frac_max=0.5 targ v(1) frac_max=1
.measure tran fall50FracMax trig v(1) frac_max=1 targ v(1) frac_max=0.5
.measure tran 50width EQN{rise50FracMax + fall50FracMax}

* pulse-width measurement example 2
.measure tran 50widthFracMax trig v(1) frac_max=0.50 targ v(1) frac_max=0.50 FALL=1
```

In some cases, the user may wish to print out both the value and time of a `MAX` or `MIN` measure to the `.mt0` file. This can be done for these two measures with the `OUTPUT` keyword as follows:

```
* printing maximum value and time of maximum value to .mt0 file
.TRAN 0 1
V1 1 0 PWL 0 0 0.5 1 1 0
```

```
R1 1 0 1
.MEASURE TRAN MAXVAL MAX V(1)
.MEASURE TRAN TIMEOFMAXVAL V(1) OUTPUT=TIME
```

The output to the `.mt0` file would be:

```
MAXVAL = 1.000000e+00
TIMEOFMAXVAL = 5.000000e-01
```

The descriptive output to standard output would be the same for both measures though. The measure value and measure time are not re-ordered in the descriptive output when `OUTPUT=VALUE` is used for the `MAX` or `MIN` measures.

```
MAXVAL = 1.000000e+00 at time = 5.000000e-01
Measure Start Time= 0.000000e+00        Measure End Time= 1.000000e+00

TIMEOFMAXVAL = 1.000000e+00 at time = 5.000000e-01
Measure Start Time= 0.000000e+00        Measure End Time= 1.000000e+00
```

Suppresssing Measure Output

If the **Xyce** output is post-processed with other programs, such as Dakota, it may be desirable to only print a subset of the measure values to the `.mt0` file, but to print all of the measure output to standard output. As an example, these `.MEASURE` statements:

```
.TRAN 0  2ms
.measure tran minSineOne  min V(1) print=none
.measure tran minSinTwo   min V(2) print=stdout
.measure tran minSinThree min V(3) print=all
.measure tran sinSinFive  min V(4)
```

would produce the following measure output in the `.mt0` file:

```
MINSINTHREE = -3.851422e-01
MINSINFOUR = -1.998548e+00
```

and the following measure output in standard output:

```
MINSINTWO = -1.188589e+00 at time = 7.400000e-04
Measure Start Time= 0.000000e+00 Measure End Time= 2.000000e-03

MINSINTHREE = -3.851422e-01 at time = 2.400000e-04
Measure Start Time= 0.000000e+00 Measure End Time= 2.000000e-03
```

```
MINSINFOUR = -1.998548e+00 at time = 7.500000e-04
Measure Start Time= 0.000000e+00 Measure End Time= 2.000000e-03
```

ERROR Measure

This subsection lists some important caveats with the use of the `ERROR` measure.

- The comparison file, specified with the `FILE` qualifier, can be `.prn`, `.csv` and `.csd` formatted output data. However, the `ERROR` measure might only work with `.csv` and `.csd` files generated by **Xyce**.
- The values of the measured waveform are interpolated to the simulation times in the comparison waveform. So, the norm calculation is inherently windowed to the time interval of the comparison waveform.
- The time window constraints (`TO`, `FROM` and `TD` qualifiers) are not supported for the `ERROR` measure. So, as noted above, the effective window for the norm calculation is set by the extent of the comparison waveform.
- The values in the column in the comparison file specified with the INDEPVARCOL qualifier must be monotonically increasing. Otherwise, **Xyce** will not run the simulation.
- The `ERROR` measure currently supports the L1, L2 and INFNORM, with the default being the L2 norm. If anything other than L1, L2 or INFNORM is specified, **Xyce** will default to the L2 norm. The descriptive output for each `ERROR` measure, that is printed to standard output, will explicitly state which norm was used for each `ERROR` measure. (Note: The norm value is selected with the `COMP_FUNCTION` qualifier, and the allowed values are `L1NORM`, `L2NORM` and `INFNORM`.)

As a final note, the `ERROR` measure can enable the use of **Xyce** simulation output in optimization problems, like device calibration. However, for internal Sandia users, there may be better approaches that leverage the combined capabilities of Sandia's Dakota and **Xyce** software packages.

Behavior for Unsupported Types

The `.MEASURE` statement is only supported for `.TRAN` analyses and `.STEP` when used with `.TRAN`. So, **Xyce** does not support `.DC` or `.AC` measure statements. If they are included in the netlist then **Xyce** will run the netlist and emit warning messages about the unsupported measure statements. **Xyce** does not produce any output for the unsupported `AC` or `DC` measures in either `stdout` or in the `.mt0` file.

HSpice Compatibility

There are known incompatibilities between the **Xyce** and HSpice implementation of `.MEASURE`. They include the following:

- Several of the **Xyce** measure types (DUTY, EQN, FREQ, FOUR, ON_TIME, and OFF_TIME) and qualifers (e.g., FRAC_MAX) are not found in HSpice. Several HSpice measures are not supported in **Xyce**.
- The HSpice qualifers of REVERSE and PREVIOUS are not supported in **Xyce**.
- The HSpice .POWER statement, which prints out a table with the AVG, RMS, MIN and MAX measures for each specified signal, is not supported in **Xyce**.
- **Xyce** only supports .MEASURE in .TRAN analysis mode.
- **Xyce** generally supports more qualifiers (FROM, TO, TD, RISE, FALL and CROSS) for the measurement windows for a given measure-type. So, some legal **Xyce** syntaxes may not be legal in HSpice.
- For TRIG and TARG clauses in **Xyce**, the TD qualifier applies to both the TRIG and TARG qualifiers. HSpice allows the specification of separate time-delays for the TRIG and TARG clauses.
- **Xyce** will not return a negative value from a TRIG and TARG measure. The TARG clause is only evaluated if the TRIG clause is satisfied. This behavior is different from HSpice.
- The Xyce EQN measure can calculate an expression based on other measure values. So, one of its usages is similar to the HSpice PARAM measure. However, their syntaxes are different.

Additional syntax differences between TRIG and TARG clauses in **Xyce** and HSpice are as follows. In HSpice, a RISE, FALL or CROSS keyword must be specified in the following measure statement. Those RISE keywords are optional with this particular syntax example in **Xyce**. If they are omitted, then **Xyce** uses a default value of 1.

```
.measure tran riseSine trig v(1)=0.01 RISE=1 targ v(1)=0.99 RISE=1
```

The following HSpice syntax (VAL=0.9) is supported in **Xyce** for TRIG and TARG measures. However, the preferred **Xyce** syntax would use `targ v(1)=0.9` instead.

```
.measure tran riseSine trig v(1) AT=0.0001 targ v(1) VAL=0.9 RISE=1
```

2.1.14 .MODEL (Model Definition)

The .MODEL command provides a set of device parameters to be referenced by device instances in the circuit.

General Form

```
.MODEL <model name> <model type> (<name>=<value>)*
```

Examples

```
.MODEL RMOD R (RSH=1)
.MODEL MOD1 NPN BF=50 VAF=50 IS=1.E-12 RB=100 CJC=.5PF TF=.6NS
.MODEL NFET NMOS(LEVEL=1 KP=0.5M VTO=2V)
```

Arguments and Options

`model name`
: The model name used to reference the model.

`model type`
: The model type used to define the model. This determines if the model is (for example) a resistor, or a MOSFET, or a diode, etc. For transistors, there will usually be more than one type possible, such as NPN and PNP for BJTs, and NMOS and PMOS for MOSFETs.

`name`
`value`
: The name of a parameter and its value. Most models will have a list of parameters available for specification. Those which are not set will receive default values. Most will be floating point numbers, but some can be integers and some can be strings, depending on the definition of the model.

Comments

The scoping rules for models are:

- If a .MODEL, statement is included in the main circuit netlist, then it is accessible from the main circuit and all subcircuits.
- .MODEL statements defined within a subcircuit are scoped to that subciruit definition. So, their models are only accessible within that subcircuit definition, as well as within "nested subcircuits" also defined within that subcircuit definition.

Additional illustative examples of scoping are given in the "Working with Subcircuits and Models" section of the **Xyce** Users' Guide [1] .

A model name can be the same as a device name in **Xyce**. However, that usage will generate a warning message during netlist parsing. The reason is that it can lead to ambiguous .PRINT lines when a model parameter and instance parameter, for a given device, have the same name but a different meaning. (For example, R1 could be used as both a resistor device-name, and as a resistor model-name. However, .PRINT TRAN R1:R would then be ambiguous.)

LEVEL Parameter

A common parameter is the LEVEL parameter, which is set to an integer value. This parameter will define exactly which model of the given type is to be used. For example, there are many different available MOSFET models. All of them will be specified using the same possible names and types. The way to differentiate (for example) between the BSIM3 model and the PSP model is by setting the appropriate LEVEL.

Model Interpolation

Traditionally, SPICE simulators handle thermal effects by coding temperature dependence of model parameters into each device. These expressions modify the nominal device parameters given in the `.MODEL` card when the ambient temperature is not equal to TNOM, the temperature at which parameters were extracted.

These temperature correction equations may be reasonable at temperatures close to TNOM, but Sandia users of **Xyce** have found them inadequate when simulations must be performed over a wide range of temperatures. To address this inadequacy, **Xyce** implements a model interpolation option that allows the user to specify multiple `.MODEL` cards, each extracted from real device measurements at a different TNOM. From these model cards, **Xyce** will interpolate parameters based on the ambient temperature using either piecewise linear or quadratic interpolation.

Interpolation of models is accessed through the model parameter TEMPMODEL in the models that support this capability. In the netlist, a base model is specified, and is followed by multiple models at other temperatures.

Interpolation of model cards in this fashion is implemented in the BJT level 1, JFET, MESFET, and MOSFETS levels 1-6, 10, and 18.

The use of model interpolation is best shown by example:

```
Jtest 1a 2a 3 SA2108 TEMP= 40
*
.MODEL SA2108 PJF ( TEMPMODEL=QUADRATIC TNOM = 27
+ LEVEL=2 BETA= 0.003130 VTO = -1.9966 PB = 1.046
+ LAMBDA = 0.00401 DELTA = 0.578; THETA = 0;
+ IS = 1.393E-10          RS = 1e-3)
*
.MODEL SA2108 PJF ( TEMPMODEL=QUADRATIC TNOM = -55
+ LEVEL=2 BETA = 0.00365 VTO = -1.9360 PB = 0.304
+ LAMBDA = 0.00286 DELTA = 0.2540 THETA = 0.0
+ IS = 1.393E-10 RD = 0.0 RS = 1e-3)
*
.MODEL SA2108 PJF ( TEMPMODEL=QUADRATIC TNOM = 90
+ LEVEL=2 BETA = 0.002770 VTO = -2.0350 PB = 1.507
+ LAMBDA = 0.00528 DELTA = 0.630 THETA = 0.0
+ IS = 1.393E-10          RS = 5.66)
```

Note that the model names are all identical for the three `.MODEL` lines, and that they all specify `TEMPMODEL=QUADRATIC`, but with different **TNOM**. For parameters that appear in all three `.MODEL` lines, the value of the parameter will be interpolated using the `TEMP=` value in the device line, which in this example is 40°C, in the first line. For parameters that are not interpolated, such as **RD**, it is not necessary to include these in the second and third `.MODEL` lines.

The only valid arguments for **TEMPMODEL** are **QUADRATIC** and **PWL** (piecewise linear). The quadratic method includes a limiting feature that prevents the parameter value from exceeding the range of values specified in the `.MODEL` lines. For example, the **RS** value in the example would take on negative values for most of the interval between -55 and 27, as the value at 90 is very high. This truncation is necessary as parameters can easily take on values (such as the negative resistance of **RS** in this example) that will cause a **Xyce** failure.

With the BJT parameters **IS** and **ISE**, interpolation is done not on the parameter itself, but on the the log of the parameter, which provides for excellent interpolation of these parameters that vary over many orders of magnitude, and with this type of temperature dependence.

The interpolation scheme used for model interpolation bases the interpolation on the difference between the ambient temperature and the **TNOM** value of the first model card in the netlist, which can sometimes lead to poorly conditioned interpolation. Thus it is often best that the first model card in the netlist be the one that has the "middle" **TNOM**, as in the example above. This ensures that no matter where in the range of temperature values the ambient temperature lies, it is a minimal distance from the base point of the interpolation.

2.1.15 .NODESET (Approximate Initial Condition, Bias point)

The .NODESET command sets initial conditions for operating point calculations. It is similar to .IC (Section 2.1.10), except it is applied as an initial guess, rather than as a firmly enforced condition. Like .IC, .NODESET initial conditions can be specified for some or all of the circuit nodes.

Consult the **Xyce** User's Guide for more guidance.

General Form

```
.NODESET < V(<node>)=<value>
.NODESET <node> <value>
```

Examples

```
.NODESET V(2)=3.1
.NODESET 2 3.1
```

Comments

The **Xyce** .NODESET command uses a different strategy than either SPICE or HSpice. When .NODESET is specified, **Xyce** does two solves for the DC operating point. One with the .NODESET values held as initial conditions (i.e., the same as if it was an .IC solve). The second solve is then done without any conditions imposed, but with the first solution as an initial guess.

The .NODESET capability can only set voltage values, not current values.

The .NODESET capability can not be used, within subcircuits, to set voltage values on global nodes.

2.1.16 .NOISE (Noise Analysis)

Calculates the the small signal noise response of a circuit over a range of frequencies. The .NOISE command can specify a linear sweep, decade logarithmic sweep, or octave logarithmic sweep.

General Form

```
.NOISE V(OUTPUT <, REF>) SRC <sweep type> <points value>
+ <start frequency value> <end frequency value>
```

Examples

```
.NOISE V(5) VIN LIN 101 100Hz 200Hz
.NOISE V(5,3) V1 OCT 10 1kHz 16kHz
.NOISE V(4) V2 DEC 20 1MEG 100MEG
```

Arguments and Options

`V(OUTPUT <,REF>)`
: The node at which the total output noise is desired. If REF is specified, then the noise voltage V(OUTPUT) - V(REF) is calculated. By default, REF is assumed to be ground.

`SRC` The name of an independent source to which input noise is referred.

`sweep type`
: Must be `LIN`, `OCT`, or `DEC`, as described below.

  `LIN` Linear sweep
  : The sweep variable is swept linearly from the starting to the ending value.

  `OCT` Sweep by octaves
  : The sweep variable is swept logarithmically by octaves.

  `DEC` Sweep by decades
  : The sweep variable is swept logarithmically by decades.

`points value`
: Specifies the number of points in the sweep, using an integer.

`start frequency value`
`end frequency value`
: The end frequency value must not be less than the start frequency value, and both must be greater than zero. The whole sweep must include at least one point.

Comments

Noise analysis is a linear analysis. The simulator calculates the noise response by linearizing the circuit around the bias point.

A `.PRINT NOISE` must be used to get the results of the NOISE sweep analysis. See Section 2.1.23.

Noise analysis is a relatively new feature to **Xyce**, so not all noise models have been supported.

2.1.17 .OP (Bias Point Analysis)

The .OP command causes detailed information about the bias point to be printed.

General Form `.OP`

Comments This type of analysis can be specified by itself, in which case **Xyce** will run a nominal operating point. However, if specified with another analysis type, no additional operating point will be calculated, as most analyses require a DC operating point for initialization.

`.OP` outputs the parameters for all the device models and all the device instances present in the circuit. For large circuits, this can be a very large amount of output, so use with caution.

If no analysis command is provided, `.OP` will run a DC Operating Point calculation (i.e., a DC analysis) with all the voltage sources left at their nominal (instance line) values.

The **Xyce** `.OP` statement may provide less, or different, output than other simulators. For some of the missing quantities, a **Xyce** `.PRINT` line can give similar information. Nodal voltages are always available on a `.PRINT` line. Device currents for many devices are available on a `.PRINT` line using the lead current notation `(I(devicename))`. Similarly, device power is available on a `.PRINT` line via `P(devicename)` or `W(devicename)`. However, these capabilities are not supported in all devices. Table 2.24 shows which devices support these lead current and power notations. Currently, there is no way to print out internal capacitances.

2.1.18 .OPTIONS Statements

Set various simulation limits, analysis control parameters and output parameters. In general, they use the following format:

General Form `.OPTIONS <pkg> [<name>=<value>]*`

Examples `.OPTIONS TIMEINT ABSTOL=1E-8`

Arguments and Options

`pkg`	`DEVICE`	Device Model
	`TIMEINT`	Time Integration
	`NONLIN`	Nonlinear Solver
	`NONLIN-TRAN`	Transient Nonlinear Solver
	`NONLIN-HB`	HB Nonlinear Solver
	`LOCA`	Continuation/Bifurcation Tracking
	`LINSOL`	Linear Solver
	`LINSOL-HB`	HB Linear Solver
	`OUTPUT`	Output
	`RESTART`	Restart
	`SENSITIVITY`	Direct and Adjoint sensitivities
	`HBINT`	Harmonic Balance (HB)

`name`
`value`
The name of the parameter and the value it will be assigned.

Comments Exceptions to this format are the `OUTPUT` and `RESTART` options, which use their own format. They are defined under their respective descriptions.

The designator `pkg` refers loosely to a *module* in the code. Thus, the term is used here as identifying a specific module to be controlled via *options* set in the netlist input file.

.OPTIONS DEVICE (Device Package Options)

The device package parameters listed in Table 2.2 outline the options available for specifying device specific parameters. Some of these (`DEFAS, DEFAD, TNOM` etc.) have the same meaning as they do for the `.OPTION` line from Berkeley SPICE (3f5). Parameters which apply globally to all device models will be specified here. Parameters specific to a particular device instance or model are specified in section 2.3.

Table 2.2: Options for Device Package

Option	Description	Default
DEFAD	MOS Drain Diffusion Area	0.0
DEFAS	MOS Source Diffusion Area	0.0
DEFL	MOS Default Channel Length	1.0E-4
DEFW	MOS Default Channel Width	1.0E-4
DIGINITSTATE	This option controls the behavior of the Digital Latch (DLTCH), D Flip-Flop (DFF), JK Flip-Flop (JKFF) and T Flip-Flop (TFF) behavioral digital devices during the DC Operating Point (DCOP) calculations. See 2.3.25 for more details.	3
GMIN	Minimum Conductance	1.0E-12
MINRES	This is a minimum resistance to be used in place of the default zero value of semiconductor device internal resistances. It is only used when model specifications (.MODEL cards) leave the parameter at its default value of zero, and is not used if the model explicitly sets the resistance to zero.	0.0
MINCAP	This is a minimum capacitance to be used in place of the default zero value of semiconductor device internal capacitances. It is only used when model specifications (.MODEL cards) leave the parameter at its default value of zero, and is not used if the model explicitly sets the capacitance to zero.	0.0
TEMP	Temperature	27.0 °C (300.15K)
TNOM	Nominal Temperature	27.0 °C (300.15K)
NUMJAC	Numerical Jacobian flag (only use for small problems)	0 (FALSE)
VOLTLIM	Voltage limiting	1 (TRUE)
icFac	This is a multiplicative factor which is applied to right-hand side vector loads of .IC initial conditions during the DCOP phase.	10000.0
LAMBERTW	This flag determines if the Lambert-W function should be applied in place of exponentials in hard-to-solve devices. This capability is implemented in the diode and BJT. Try this for BJT circuits that have convergence problems. For best effect, this option should be tried with voltlim turned off. A detailed explanation of the Lambert-W function, and its application to device modeling can be found in reference [5].	0 (FALSE)
MAXTIMESTEP	Maximum time step size	1.0E+99

MOSFET Homtopy parameters

Table 2.2: Options for Device Package

Option	Description	Default
VDSSCALEMIN	Scaling factor for Vds	0.3
VGSTCONST	Initial value for Vgst	4.5 Volt
LENGTH0	Initial value for length	5.0e-6
WIDTH0	Initial value for width	200.0e-6
TOX0	Initial value for oxide thickness	6.0e-8
Debug output parameters		
DEBUGLEVEL	The higher this number, the more info is output	1
DEBUGMINTIMESTEP	First time-step debug information is output	0
DEBUGMAXTIMESTEP	Last time-step of debug output	65536
DEBUGMINTIME	Same as DEBUGMINTIMESTEP except controlled by time (sec.) instead of step number	0.0
DEBUGMAXTIME	Same as DEBUGMAXTIMESTEP except controlled by time (sec.) instead of step number	100.0

.OPTIONS TIMEINT (Time Integration Options)

The time integration parameters listed in Table 2.3 give the available options for helping control the time integration algorithms for transient analysis.

Time integration options are set using the .OPTIONS TIMEINT command.

Table 2.3: Options for Time Integration Package.

Option	Description	Default
METHOD	Time integration method. This parameter is only relevant when running **Xyce** in transient mode. Supported methods: ■ trap or 7 (variable order Trapezoid) ■ gear or 8 (Gear method)	trap or 7 (variable order Trapezoid)
RELTOL	Relative error tolerance	1.0E-03
ABSTOL	Absolute error tolerance	1.0E-06
RESTARTSTEPSCALE	This parameter is a scalar which determines how small the initial time step out of a breakpoint should be. In the current version of the time integrator, the first step after a breakpoint isn't subjected to much error analysis, so for very stiff circuits, this step can be problematic.	0.005

Table 2.3: Options for Time Integration Package.

Option	Description	Default
NLNEARCONV	This flag sets if “soft” failures of the nonlinear solver, when the convergence criteria are almost, but not quite, met, should result in a ”success” code being returned from the nonlinear solver to the time integrator. If this is enabled, it is expected that the error analysis performed by the time integrator will be the sole determination of whether or not the time step is considered a “pass” or a “fail”. This is on by default, but occasionally circuits need tighter convergence criteria.	0 (FALSE)
NLSMALLUPDATE	This flag is another “soft” nonlinear solver failure flag. In this case, if the flag is set, time steps in which the nonlinear solver stalls, and is using updates that are numerically tiny, can be considered to have converged by the nonlinear solver. If this flag is set, the time integrator is responsible for determining if a step should be accepted or not.	1 (TRUE)
RESETTRANNLS	The nonlinear solver resets its settings for the transient part of the run to something more efficient (basically a simpler set of options with smaller numbers for things like max Newton step). If this is set to false, this resetting is turned off. Normally should be left as default.	1 (TRUE)
MAXORD	This parameter determines the maximum order of integration that time integrators will attempt. Setting this option does not guarantee that the integrator will integrate at this order, it just sets the maximum order the integrator will attempt. In order to guarantee a particular order is used, see the option MINORD below.	2 for variable order Trapezoid and Gear
MINORD	This parameter determines the minimum order of integration that time integrators will attempt to maintain. The integrator will start at Backward Euler and move up in order as quickly as possible to achive MINORD and then it will keep the order above this. If MINORD is set at 2 and MAXORD is set at 2, then the integrator will move to second order as quickly as possible and stay there.	1
NEWLTE	This parameter determines the reference value for relative convergence criterion in the local truncation error based time step control. The supported choices ■ 0. The reference value is the current value on each node. ■ 1. The reference value is the maximum of all the signals at the current time. ■ 2. The reference value is the maximum of all the signals over all past time. ■ 3. The reference value is the maximum value on each signal over all past time.	1

Table 2.3: Options for Time Integration Package.

Option	Description	Default
NEWBPSTEPPING	This flag sets a new time stepping method after a break point. Previously, **Xyce** treats each breakpoint identically to the DCOP point, in which the intitial time step out of the DCOP is made to be very very small, because the LTE calculation is unreliable. As a result, **Xyce** takes an incredibly small step out of each breakpoint and then tries to grow the stepsize from there. When NEWBPSTEPPING is set, **Xyce** can take a reasonable large step out of every non-DCOP breakpoint, and then just relies on the step control to ensure that the step is small enough. Note that the new time stepping method after a break point does not work well with the old LTE calculation since the old LTE calculation is conservative and it tends to reject the first time step out of a break point. We recommend to use newlte if you choose to use the new time stepping method out of a break point.	1 (TRUE)
MASKIVARS	This parameter masks out current variables in the local truncation error (LTE) based time step control.	0 (FALSE)
ERROPTION	This parameter determines if Local Truncation Error (LTE) control is turned on or not. If ERROPTION is on, then step-size selection is based on the number of Newton iterations nonlinear solve. For Trapezoid and Gear, if the number of nonlinear iterations is below NLMIN then the step is doubled. If the number of nonlinear iterations is above NLMAX then the step is cut by one eighth. In between, the step-size is left alone. Because this option can lead to very large time-steps, it is very important to specify an appropriate DELMAX option. If the circuit has breakpoints, then the option MINTIMESTEPSBP can also help to adjust the maximum time-step by specifying the minimum number of time points between breakpoints.	0 (Local Truncation Error is used)
NLMIN	This parameter determines the lower bound for the desired number of nonlinear iterations during a Trapezoid time or Gear integration solve with ERROPTION=1.	3
NLMAX	This parameter determines the upper bound for the desired number of nonlinear iterations during a Trapezoid time or Gear integration solve with ERROPTION=1.	8
DELMAX	This parameter determines the maximum time step-size used with ERROPTION=1. If a maximum time-step is also specified on the .TRAN line, then the minimum of that value and DELMAX is used.	1e99
MINTIMESTEPSBP	This parameter determines the minimum number of time-steps to use between breakpoints. This enforces a maximum time-step between breakpoints equal to the distance between the last breakpoint and the next breakpoint divided by MINTIMESTEPSBP.	10

Table 2.3: Options for Time Integration Package.

Option	Description	Default
TIMESTEPSREVERSAL	This parameter determines whether time-steps are rejected based upon the step-size selection strategy in ERROPTION=1. If it is set to 0, then a step will be accepted with successful nonlinear solves independent of whether the number of nonlinear iterations is between NLMIN and NLMAX. If it is set to 1, then when the number of nonlinear iterations is above NLMAX, the step will be rejected and the step-size cut by one eighth and retried. If ERROPTION=0 (use LTE) then TIMESTEPSREVERSAL=1 (reject steps) is set.	0 (do not reject steps)
DOUBLEDCOPSTEP	TCAD devices by default will solve an extra "setup" problem to mitigate some of the convergence problems that TCAD devices often exhibit. This extra setup problem solves a nonlinear Poisson equation first to establish an initial guess for the full drift-diffusion(DD) problem. The name of this parameter refers to the fact that the code is solving two DC operating point steps instead of one. To solve only the nonlinear Poisson problem, then set DOUBLEDCOP=nl_poisson. To solve only the drift-diffusion problem (skipping the nonlinear Poisson), set DOUBLEDCOP=drift_diffusion. To explicitly set the default behavior, then set DOUBLEDCOP=nl_poisson, drift_diffusion.	Default value, for TCAD circuits, is a combination: nl_poisson, drift_diffusion. Default value, for non-TCAD circuits is a moot point. If no TCAD devices are present in the circuit, then there will not be an extra DCOP solve.
BPENABLE	Flag for turning on/off breakpoints (1 = ON, 0 = OFF). It is unlikely anyone would ever set this to FALSE, except to help debug the breakpoint capability.	1 (TRUE)
EXITTIME	If this is set to nonzero, the code will check the simulation time at the end of each step. If the total time exceeds the exittime, the code will ungracefully exit. This is a debugging option, the point of which is the have the code stop at a certain time during a run without affecting the step size control. If not set by the user, it isn't activated.	-
EXITSTEP	Same as EXITTIME, only applied to step number. The code will exit at the specified step. If not set by the user, it isn't activated.	-

.OPTIONS HBINT (Harmonic Balance Options)

The Harmonic Balance parameters listed in Table 2.4 give the available options for helping control the algorithm for harmonic balance analysis.

Harmonic Balance options are set using the .OPTIONS HBINT command.

Table 2.4: Options for HB.

Option	Description	Default
NUMFREQ	Number of harmonics to be calculated for each tone. It must have the same number of entries as .HB statement	10
STARTUPPERIODS	Number of periods to integrate through before calculating the initial conditions. This option is only used when TAHB=1.	0
SAVEICDATA	Write out the initial conditions to a file.	0
TAHB	This flag sets transient assisted HB. When TAHB=0, transient analysis is not performed to get an initial guess. When TAHB=1, it uses transient analysis to get an initial guess. For multi-tone HB simulation, the initial guess is generated by a single tone transient simulation. The first tone following .HB is used to determine the period for the transient simulation. For multi-tone HB simulation, it should be set to the frequency that produces the most nonlinear response by the circuit.	1
VOLTLIM	This flag sets voltage limiting for HB. During the initial guess calculation, which normally uses transient simulation, the voltage limiting flag is determined by .options device voltlim. During the HB phase, the voltage limiting flag is determined by .options hbint voltlim.	1
INTMODMAX	The maximum intermodulation product order used in the spectrum.	the largest value in the NUMFREQ list.
NUMTPTS	Number of time points in the output	The total number of frequencies (positive, negative and DC).

.OPTIONS NONLIN (Nonlinear Solver Options)

The nonlinear solver parameters listed in Table 2.5 provide methods for controlling the nonlinear solver for DC, transient and harmonic balance. Note that the nonlinear solver options for DCOP, transient and harmonic balance are specified in separate options statements, using .OPTIONS NONLIN, .OPTIONS NONLIN-TRAN and .OPTIONS NONLIN-HB, respectively. The defaults for .OPTIONS NONLIN and .OPTIONS NONLIN-TRAN are specified in the third and fourth columns of

Table 2.5. The defaults for `.OPTIONS NONLIN-HB` are the same as the default settings given for `NONLIN-TRAN` with two exceptions. For `NONLIN-HB`, the default for `ABSTOL` is 1e-9 and the default for `RHSTOL` is 1e-4.

Table 2.5: Options for Nonlinear Solver Package.

Option	Description	NONLIN Default	NONLIN-TRAN Default
NOX	Use NOX nonlinear solver.	1 (TRUE)	0 (FALSE)
NLSTRATEGY	Nonlinear solution strategy. Supported Strategies: ■ 0 (Newton) ■ 1 (Gradient) ■ 2 (Trust Region)	0 (Newton)	0 (Newton)
SEARCHMETHOD	Line-search method used by the nonlinear solver. Supported line-search methods: ■ 0 (Full Newton - no line search) ■ 1 (Interval Halving) ■ 2 (Quadratic Interpolation) ■ 3 (Cubic Interpolation) ■ 4 (More'-Thuente)	0 (Full Newton)	0 (Full Newton)
CONTINUATION	Enables the use of Homotopy/Continuation algorithms for the nonlinear solve. Options are: ■ 0 (Standard nonlinear solve) ■ 1 (Natural parameter homotopy. See LOCA options list) ■ 2/mos (Specialized dual parameter homotopy for MOSFET circuits) ■ 3/gmin (GMIN stepping, similar to that of SPICE)	0 (Standard nonlinear solve)	0 (Standard nonlinear solve)
ABSTOL	Absolute residual vector tolerance	1.0E-12	1.0E-06
RELTOL	Relative residual vector tolerance	1.0E-03	1.0E-02
DELTAXTOL	Weighted nonlinear-solution update norm convergence tolerance	1.0	0.33
RHSTOL	Residual convergence tolerance (unweighted 2-norm)	1.0E-06	1.0E-02
SMALLUPDATETOL	Minimum acceptable norm for weighted nonlinear-solution update	1.0E-06	1.0E-06
MAXSTEP	Maximum number of Newton steps	200	20
MAXSEARCHSTEP	Maximum number of line-search steps	2	2

Table 2.5: Options for Nonlinear Solver Package.

Option	Description	NONLIN Default	NONLIN-TRAN Default
NORMLVL	Norm level used by the nonlinear solver algorithms *(NOTE: not used for convergence tests)*	2	2
IN_FORCING	Inexact Newton-Krylov forcing flag	0 (FALSE)	0 (FALSE)
AZ_TOL	Sets the minimum allowed linear solver tolerance. Valid only if IN_FORCING=1.	1.0E-12	1.0E-12
RECOVERYSTEPTYPE	If using a line search, this option determines the type of step to take if the line search fails. Supported strategies: ■ 0 (Take the last computed step size in the line search algorithm) ■ 1 (Take a constant step size set by RECOVERYSTEP)	0	0
RECOVERYSTEP	Value of the recovery step if a constant step length is selected	1.0	1.0
DLSDEBUG	Debug output for direct linear solver	0 (FALSE)	0 (FALSE)
DEBUGLEVEL	The higher this number, the more info is output	1	1
DEBUGMINTIMESTEP	First time-step debug information is output	0	0
DEBUGMAXTIMESTEP	Last time-step of debug output	99999999	99999999
DEBUGMINTIME	Same as DEBUGMINTIMESTEP except controlled by time (sec.) instead of step number	0.0	0.0
DEBUGMAXTIME	Same as DEBUGMAXTIMESTEP except controlled by time (sec.) instead of step number	1.0E+99	1.0E+99
Parameters not supported by NOX			
LINOPT	Linear optimization flag	0 (FALSE)	0 (FALSE)
CONSTRAINTBT	Constraint backtracking flag	0 (FALSE)	0 (FALSE)
CONSTRAINTMAX	Global maximum setting for constraint backtracking	DBL_MAX (Machine Dependent Constant)	DBL_MAX
CONSTRAINTMIN	Global minimum setting for constraint backtracking	-DBL_MAX (Machine Dependent Constant)	-DBL_MAX
CONSTRAINTCHANGE	Global percentage-change setting for constraint backtracking	sqrt(DBL_MAX) (Machine Dependent Constant)	sqrt(DBL_MAX)

.OPTIONS LOCA (Continuation and Bifurcation Tracking Package Options)

The continuation selections listed in Table 2.6 provide methods for controlling continuation and bifurcation analysis. These override the defaults and any that were set simply in the continuation package. This option block is only used if the nonlinear solver or transient nonlinear solver enable continuation through the CONTINUATION flag.

There are two specialized homotopy methods that can be set in the nonlinear solver options line. One is MOSFET-based homotopy, which is specific to MOSFET circuits. This is specified using continuation=2 or continuation=mos. The other is GMIN stepping, which is specified using continuation=3 or continuation=gmin. For either of these methods, while it is possible to modify their default LOCA options, it is generally not necessary to do so. Note that **Xyce** automatically attempts GMIN stepping if the inital attempt to find the DC operating point fails. If GMIN stepping is specified in the netlist, **Xyce** will not attempt to find a DC operating point without GMIN stepping.

LOCA options are set using the .OPTIONS LOCA command.

Table 2.6: Options for Continuation and Bifurcation Tracking Package.

Option	Description	Default
STEPPER	Stepping algorithm to use: ■ 0 (Natural or Zero order continuation) ■ 1 (Arc-length continuation)	0 (Natural)
PREDICTOR	Predictor algorithm to use: ■ 0 (Tangent) ■ 1 (Secant) ■ 2 (Random) ■ 3 (Constant)	0 (Tangent)
STEPCONTROL	Algorithm used to adjust the step size between continuation steps: ■ 0 (Constant) ■ 1 (Adaptive)	0 (Constant)
CONPARAM	Parameter in which to step during a continuation run	VA:V0
INITIALVALUE	Starting value of the continuation parameter	0.0
MINVALUE	Minimum value of the continuation parameter	-1.0E20
MAXVALUE	Maximum value of the continuation parameter	1.0E20
BIFPARAM	Parameter to compute during bifurcation tracking runs	VA:V0
MAXSTEPS	Maximum number of continuation steps (includes failed steps)	20

Table 2.6: Options for Continuation and Bifurcation Tracking Package.

Option	Description	Default
MAXNLITERS	Maximum number of nonlinear iterations allowed (set this parameter equal to the MAXSTEP parameter in the NONLIN option block	20
INITIALSTEPSIZE	Starting value of the step size	1.0
MINSTEPSIZE	Minimum value of the step size	1.0E20
MAXSTEPSIZE	Maximum value of the step size	1.0E-4
AGGRESSIVENESS	Value between 0.0 and 1.0 that determines how aggressive the step size control algorithm should be when increasing the step size. 0.0 is a constant step size while 1.0 is the most aggressive.	0.0
RESIDUALCONDUCTANCE	If set to a nonzero (small) number, this parameter will force the GMIN stepping algorithm to stop and declare victory once the artificial resistors have a conductance that is smaller than this number. This should only be used in transient simulations, and *ONLY* if it is absolutely necessary to get past the DC operating point calculation. It is almost always better to fix the circuit so that residual conductance is not necessary.	0.0

.OPTIONS LINSOL (Linear Solver Options)

Xyce uses both sparse direct solvers as well as Krylov iterative methods for the solution of the linear equations generated by Newton's method. For the advanced users, there are a variety of options that can be set to help improve these solvers. Transformations of the linear system have a "TR_" prefix on the flag. Many of the options for the Krylov solvers are simply passed through to the underlying Trilinos/AztecOO solution settings and thus have an "AZ_" prefix on the flag.

Linear solver options are set using the .OPTIONS LINSOL command.

Table 2.7: Options for Linear Solver Package.

Option	Description	Default
TYPE	Determines which linear solver will be used. ■ KLU ■ KSparse ■ SuperLU (optional) ■ AztecOO ■ Belos ■ ShyLU (optional) Note that while KLU, KSparse, and SuperLU (optional) are available for parallel execution they will solve the linear system in serial. Therefore they will be useful for moderate problem sizes but will not scale in memory or performance for large problems	KLU (Serial) AztecOO (Parallel)
TR_partition	Perform load-balance partitioning on the linear system	0 (NONE, Serial) 1 (Isorropia, Parallel)
TR_partition_type	Type of load-balance partitioning on the linear system	"HYPERGRAPH"
TR_singleton_filter	Triggers use of singleton filter for linear system	0 (FALSE, Serial) 1 (TRUE, Parallel)
TR_amd	Triggers use of approximate minimum-degree (AMD) ordering for linear system	0 (FALSE, Serial) 1 (TRUE, Parallel)
TR_global_btf	Triggers use of block triangular form (BTF) ordering for linear system, requires TR_amd=0 and TR_partition=0	0 (FALSE)
TR_reindex	Reindexes linear system parallel global indices in lexigraphical order, recommended with singleton filter	1 (TRUE)
TR_solvermap	Triggers remapping of column indices for parallel runs, recommended with singleton filter	1 (TRUE)
Iterative linear solver parameters		
adaptive_solve	Triggers use of AztecOO adaptive solve algorithm for preconditioning of iterative linear solves	0 (FALSE)
use_aztec_precond	Triggers use of native AztecOO preconditioners for the iterative linear solves	0 (FALSE)
AZ_max_iter	Maximum number of iterative solver iterations	500
AZ_precond	AztecOO iterative solver preconditioner flag (used only when use_aztec_precond=1)	AZ_dom_decomp (14)
AZ_solver	Iterative solver type	AZ_gmres (1)

Table 2.7: Options for Linear Solver Package.

Option	Description	Default
AZ_conv	Convergence type	AZ_r0 (0)
AZ_pre_calc	Type of precalculation	AZ_recalc (1)
AZ_keep_info	Retain calculation info	AZ_true (1)
AZ_orthog	Type of orthogonalization	AZ_modified (1)
AZ_subdomain_solve	Subdomain solution for domain decomposition preconditioners	AZ_ilut (9)
AZ_ilut_fill	Approximate allowed fill-in factor for the ILUT preconditioner	2.0
AZ_drop	Specifies drop tolerance used in conjunction with LU or ILUT preconditioners	1.0E-03
AZ_reorder	Reordering type	AZ_none (0)
AZ_scaling	Type of scaling	AZ_none (0)
AZ_kspace	Maximum size of Krylov subspace	500
AZ_tol	Convergence tolerance	1.0E-12
AZ_output	Output level	AZ_none (0) 50 (if verbose build)
AZ_diagnostics	Diagnostic information level	AZ_none (0)
AZ_overlap	Schwarz overlap level for ILU preconditioners	0
AZ_rthresh	Diagonal shifting relative threshold for ILU preconditioners	1.0001
AZ_athresh	Diagonal shifting absolute threshold for ILU preconditioners	1.0E-04
ShyLU_rthresh	Relative dropping threshold for Schur complement preconditioner (ShyLU only)	1.0E-03

.OPTIONS LINSOL-HB (Linear Solver Options)

For harmonic balance (HB) analysis, **Xyce** provides both iterative and direct methods for the solution of the steady state. Only matrix-free techniques are available for preconditioning the HB Jacobian with an iterative linear solver. The direct linear solver explicitly forms the HB Jacobian and solves the complex-valued linear system with the requested solver. For HB analysis, a reduced number of linear solver options are available, and are set using the .OPTIONS LINSOL-HB command.

Table 2.8: Options for Linear Solver Package for HB.

Option	Description	Default
TYPE	Determines which linear solver will be used. ■ AztecOO ■ Belos ■ Direct	AztecOO
DIRECT_SOLVER	Determines which direct linear solver will be used. ■ LAPACK	LAPACK
AZ_kspace	Maximum size of Krylov subspace	500
AZ_tol	Convergence tolerance	1.0E-12
prec_type	Preconditioning type	block_jacobi

.OPTIONS OUTPUT (Output Options)

One purpose of the .OPTIONS OUTPUT command is to allow control of the output frequency of data to files specified by .PRINT TRAN commands. The format is:

```
.OPTIONS OUTPUT INITIAL_INTERVAL=<interval> [<t0> <i0> [<t1> <i1>]* ]
```

where INITIAL_INTERVAL=<interval> specifies the starting interval time for output and <tx> <ix> specifies later simulation times <tx> where the output interval will change to <ix>. The solution is output at the exact intervals requested; this is done by interpolating the solution to the requested time points.

Another purpose is to allow the user to suppress the header and footer from standard format output files.

```
.OPTIONS OUTPUT PRINTHEADER=<boolean> PRINTFOOTER=<boolean>
```

where setting the PRINTHEADER variable to “false” will suppress the header and PRINTFOOTER variable to “false” will suppress the footer. These options are only applicable to .PRINT <analysis> FORMAT=STD files, the default format.

.OPTIONS RESTART (Checkpointing Options)

The .OPTIONS RESTART command is used to control all checkpoint output and restarting.

The checkpointing form of the .OPTIONS RESTART command takes the following format:

General Format:

```
.OPTIONS RESTART [PACK=<0|1>] JOB=<job prefix>
+ [INITIAL_INTERVAL=<initial interval time> [<t0> <i0> [<t1> <i1>]* ]]
```

`PACK=<0|1>` indicates whether the restart data will be byte packed or not. Parallel restarts must always be packed while Windows/MingW runs are always not packed. Otherwise, data will be packed by default unless explicitly specified. `JOB=<job prefix>` identifies the prefix for restart files. The actual restart files will be the job name with the current simulation time appended (e.g. `name1e-05` for `JOB=name` and simulation time 1e-05 seconds). Furthermore, `INITIAL_INTERVAL=<initial interval time>` identifies the initial interval time used for restart output. The `<tx> <ix>` intervals identify times `<tx>` at which the output interval `(ix)` should change. This functionality is identical to that described for the `.OPTIONS OUTPUT` command.

Examples

To generate checkpoints at every time step (default):

Example: `.OPTIONS RESTART JOB=checkpt`

To generate checkpoints every 0.1 μs:

Example: `.OPTIONS RESTART JOB=checkpt INITIAL_INTERVAL=0.1us`

To generate unpacked checkpoints every 0.1 μs:

Example: `.OPTIONS RESTART PACK=0 JOB=checkpt INITIAL_INTERVAL=0.1us`

To specify an initial interval of 0.1 μs, at 1 μs change to interval of 0.5 μs, and at 10 μs change to interval of 0.1 μs:

Example:

```
.OPTIONS RESTART JOB=checkpt INITIAL_INTERVAL=0.1us 1.0us
+ 0.5us 10us 0.1us
```

`.OPTIONS RESTART` (Restarting Options)

To restart from an existing restart file, specify the file by either `FILE=<restart file name>` to explicitly use a restart file or by `JOB=<job name> START_TIME=<specified name>` to specify a file prefix and a specified time. The time must exactly match an output file time for the simulator to correctly identify the correct file. To continue generating restart output files, `INITIAL_INTERVAL=<interval>` and following intervals can be appended to the command in the same format as described above. New restart files will be packed according to the previous restart file read in.

The restarting form of the `.OPTIONS RESTART` command takes the following format:

General Format:

```
.OPTIONS RESTART FILE=<restart file name>|JOB=<job name> START_TIME=<time>
+ [ INITIAL_INTERVAL=<interval> [<t0> <i0> [<t1> <i1>]* ]]
```

Examples

Example restarting from checkpoint file at 0.133 μs:

Example: `.OPTIONS RESTART JOB=checkpt START_TIME=0.133us`

To restart from checkpoint file at 0.133 μs:

Example: `.OPTIONS RESTART FILE=checkpt0.000000133`

Restarting from 0.133 μs and continue checkpointing at 0.1 μs intervals:

Example:

```
 .OPTIONS RESTART FILE=checkpt0.000000133 JOB=checkpt_again
+ INITIAL_INTERVAL=0.1us
```

`.OPTIONS RESTART`: special notes for use with two-level-Newton

Large parallel problems which involve power supply parasitics often require a two-level solve, in which different parts of the problem are handled separately. In most respects, restarting a two-level simulation is similar to restarting a conventional simulation. However, there are a few differences:

- When running with a two-level algorithm, **Xyce** requires (at least) two different input files. In order to do a restart of a two-level **Xyce** simulation, it is necessary to have an `.OPTIONS RESTART` statement in each file.
- It is necessary for the statements to be consistent. For example, the output times must be exactly the same, meaning the initial intervals must be exactly the same.
- **Xyce** will *not* check to make sure that the restart options used in different files match, so it is up to the user to ensure matching options.
- Finally, as each netlist that is part of a two-level solve will have its own `.OPTIONS RESTART` statement, that means that each netlist will generate and/or use its own set of restart files. As a result, the restart file name used by each netlist must be unique.

`.OPTIONS SENSITIVITY` (Direct and Adjoint Sensitivity Options)

The sensitivity selections listed in Table 2.9 provide methods for controlling direct and adjoint sensitivity analysis.

SENSITIVITY options are set using the `.OPTIONS SENSITIVITY` command. They are only used if the netlist also includes a `.SENS` statement.

Table 2.9: Options for Sensitivity Package.

Option	Description	Default
`ADJOINT`	Flag to enable adjoint sensitivity calculation	false
`DIRECT`	Flag to enable direct sensitivity calculation	false
`OUTPUTSCALED`	Flag to enable output of scaled sensitivities	false
`OUTPUTUNSCALED`	Flag to enable output of unscaled sensitivities	true
`STDOUTPUT`	Flag to enable output of sensitivies to std output	false
`ADJOINTBEGINTIME`	Start time for set of time steps over which to compute transient adjoints.	0.0
`ADJOINTFINALTIME`	End time for set of time steps over which to compute transient adjoints.	1.0e+99
`ADJOINTTIMEPOINTS`	List of comma-separated time points at which to compute transient adjoints.	–

2.1.19 .PARAM (Parameter)

User defined parameter that can be used in expressions throughout the netlist.

General Form

```
.PARAM [<name>=<value>]*
```

Examples

```
.PARAM A_Param=1K
.PARAM B_Param={A_Param*3.1415926535}
```

Arguments and Options

`name`
`value`
: The name of a parameter and its value.

Comments

Parameters defined using `.PARAM` are evaluated when the netlist is read in, and therefore must evaluate to constants at the time the netlist is parsed. It is therefore illegal to use any time- or solution-dependent terms in parameter definitions, including the TIME variable or any nodal voltages. Since they must be constants, these parameters may also not be used in `.STEP` loops.

There are several reserved words that may not be used as names for parameters. These parameters are:

- `Time`
- `Vt`
- `Temp`
- `GMIN`

The scoping rules for parameters are:

- If a `.PARAM`, statement is included in the main circuit netlist, then it is accessible from the main circuit and all subcircuits.
- `.PARAM` statements defined within a subcircuit are scoped to that subciruit definition. So, their parameters are only accessible within that subcircuit definition, as well as within "nested subcircuits" also defined within that subcircuit definition.

Additional illustative examples of scoping are given in the "Working with Subcircuits and Models" section of the **Xyce** Users' Guide [1] .

2.1.20 .PREPROCESS REPLACEGROUND (Ground Synonym)

The purpose of ground synonym replacement is to treat nodes with the names GND, GND!, GROUND or any capital/lowercase variant thereof as synonyms for node 0. The general invocation is

General Form .PREPROCESS REPLACEGROUND <bool>

Arguments and Options

bool

If TRUE, **Xyce** will treat all instances of GND, GND!, GROUND, or any capital/lowercase variant thereof, as synonyms for node 0. If FALSE, **Xyce** will consider each term as a separate node. Only one .PREPROCESS REPLACEGROUND statement is permissible in a given netlist file.

2.1.21 .PREPROCESS REMOVEUNUSED (Removal of Unused Components)

If a given netlist file contains devices whose terminals are all connected to the same node (*e.g.*, `R2 1 1 1M`), it may be desirable to remove such components from the netlist before simulation begins. This is the purpose of the command

General Form `.PREPROCESS REMOVEUNUSED [<value>]`

Arguments and Options

`value`
is a list of components separated by commas. The allowed values are

`C`	Capacitor
`D`	Diode
`I`	Independent Current Source
`L`	Inductor
`M`	MOSFET
`Q`	BJT
`R`	Resistor
`V`	Independent Voltage Source

Examples `.PREPROCESS REMOVEUNUSED R,C`

`.PREPROCESS` will attempt to search for all resistors and capacitors in a given netlist file whose individual device terminals are connected to the same node and remove these components from the netlist before simulation ensues. A list of components that are supported for removal is given above. Note that for MOSFETS and BJTs, three terminals on each device (the gate, source, and drain in the case of a MOSFET and the collector, base, and emitter in the case of a BJT) must be the same for the device to be removed from the netlist. As before, only one `.PREPROCESS REMOVEUNUSED` line is allowed in a given netlist file.

2.1.22 .PREPROCESS ADDRESISTORS (Adding Resistors to Dangling Nodes)

We refer to a *dangling node* as a circuit node in one of the following two scenarios: either the node is connected to only one device terminal, and/or the node has no DC path to ground. If several such nodes exist in a given netlist file, it may be desirable to automatically append a resistor of a specified value between the dangling node and ground. To add resistors to nodes which are connected to only one device terminal, one may use the command

General Form `.PREPROCESS ADDRESISTORS ONETERMINAL <value>`

Arguments and Options

`value`
: is the value of the resistor to be placed between nodes with only one device terminal connection and ground. For instance, the command

---

Examples `.PREPROCESS ADDRESISTORS ONETERMINAL 1G`

will add resistors of value 1G between ground and nodes with only one device terminal connection and ground. The command

---

Examples `.PREPROCESS ADDRESISTORS NODCPATH <value>`

acts similarly, adding resistors of value `<VALUE>` between ground and all nodes which have no DC path to ground.

The `.PREPROCESS ADDRESISTORS` command is functionally different from either of the prior `.PREPROCESS` commands in the following way: while the other commands augment the netlist file for the current simulation, a `.PREPROCESS ADDRESISTORS` statement creates an auxiliary netlist file which explicitly contains a set of resistors that connect dangling nodes to ground. If the original netlist file containing a `.PREPROCESS ADDRESISTORS` statement is called `filename`, invoking **Xyce** on this file will produce a file `filename_xyce.cir` which contains the resistors that connect dangling nodes to ground. One can then run **Xyce** on this file to run a simulation in which the dangling nodes are tied to ground. Note that, in the original run on the file `filename`, **Xyce** will continue to run a simulation as usual after producing the file `filename_xyce.cir`, but this simulation will *not* include the effects of adding resistors between the dangling nodes and ground. Refer to the **Xyce** User's Guide for more detailed examples on the use of `.PREPROCESS ADDRESISTOR` statements.

Note that it is possible for a node to have one device terminal connection and, simultaneously, have no DC path to ground. In this case, if both a `ONETERMINAL` and `NODCPATH` command are invoked, only the resistor for the `ONETERMINAL` connection is added to the netlist; the `NODCPATH` connection is omitted.

As before, each netlist file is allowed to contain only one `.PREPROCESS ADDRESISTORS ONETERMINAL` and one `.PREPROCESS ADDRESISTORS NODCPATH` line each, or else **Xyce** will exit in error.

2.1.23 .PRINT (Print output)

Send analysis results to an output file.

Xyce allows multiple output files to be created during the run and supports several options for each.

General Form

```
.PRINT <print type> [FORMAT=<STD|NOINDEX|PROBE|TECPLOT|RAW|CSV|GNUPLOT>]
+ [FILE=<output filename>] [WIDTH=<print field width>]
+ [PRECISION=<floating point output precision>]
+ [FILTER=<absolute value below which a number outputs as 0.0>]
+ [DELIMITER=<TAB|COMMA>] [TIMESCALEFACTOR=<real scale factor>]
+ <output variable> [output variable]*
```

Examples

```
.print tran format=tecplot V(1) I(Vsrc) {V(1)*(I(Vsrc)**2.0)}

.PRINT TRAN FORMAT=PROBE FILE=foobar.csd V(1) {abs(V(1))-5.0}

.PRINT DC FILE=foobar.txt WIDTH=19 PRECISION=15 FILTER=1.0e-10
+ I(VSOURCE5) I(VSOURCE6)

.print tran FORMAT=RAW V(1) I(Vsrc)

R1 1 0 100
X1 1 2 3 MySubcircuit
V1 3 0 1V
.SUBCKT MYSUBCIRCUIT 1 2 3
R1 1 2  100K
R2 2 4  50K
R3 4 3  1K
.ENDS

.PRINT DC V(X1:4) V(2) I(V1)
```

Arguments and Options

`print type`

A print type is the name of an analysis, one of the analysis specific print subtypes, or a specialized output command.

Analysis	Print Type	Description
.AC	AC	Sets default variable list and formats for print subtypes
.AC	AC_IC	Overrides variable list and format for AC initial conditions
.DC	DC	
.HB	HB	
.HB	HB_FD	Overrides variable list and format for HB frequency domain
.HB	HB_IC	Overrides variable list and format for HB initial conditions
.HB	HB_STARTUP	Overrides variable list and format for HB start up
.HB	HB_TD	Overrides variable list and format for HB time domain
.NOISE	Noise	Outputs Noise spectral density curves
.TRAN	TRAN	
	Specialized Output Commands	
Homotopy	HOMOTOPY	Sets variable list and format for homotopy
.SENS	SENS	Sets variable list and format for sensitivity

A netlist may contain many .PRINT commands, but only commands with analysis types which are appropriate for the analysis being performed are processed. This feature allows you to generate multiple formats and variable sets in a single analysis run.

For analysis types that generate multiple output files, the print subtype allows you to specify variables and output parameters for each of those output files. If there is no .PRINT <subtype> provided in the net list, the variables and parameters from the analysis type will be used.

FORMAT=<STD|NOINDEX|PROBE|TECPLOT|RAW|CSV|GNUPLOT>

The output format may be specified using the FORMAT option. The STD format outputs the data divided up into data columns. The NOINDEX format is the same as the STD format except that the index column is omitted. The PROBE format specifies that the output should be formatted to be compatible with the PSpice Probe plotting utility. The TECPLOT format specifies that the output should be formatted to be compatible with the Tecplot plotting program. The RAW format specifies that the output should comply with the SPICE binary rawfile format. Use with the **-a** command line option to output an ascii rawfile. The CSV format specifies that the output file should be a comma-separated value file

with a header indicating the variables printed in the file. It is similar to, but not identical to using DELIMITER=COMMA; the latter will also print a footer that is not compatible with most software that requires CSV format. The GNUPLOT format is the same as the STD format except that if .STEP is used then two blank lines are inserted before the data for steps 1,2,3,... where the first step is step 0.

FILE=<output filename>
: Specifies the name of the file to which the output will be written.

WIDTH=<print field width>
: Controls the output width used in formatting the output.

PRECISION=<floating point precision>
: Number of floating point digits past the decimal for output data.

FILTER=<filter floor value>
: Used to specify the absolute value below which output variables will be printed as 0.0.

DELIMITER=<TAB|COMMA>
: Used to specify an alternate delimiter in the STD or NOINDEX format output.

TIMESCALEFACTOR=<real scale factor>
: Specify a constant scaling factor for time. Time is normally printed in units of seconds, but if one would like the units to be milliseconds, then set TIMESCALEFACTOR=1000.

<output variable>
: Following the analysis type and other options is a list of output variables. There is no upper bound on the number of output variables. The output is divided up into data columns and output according to any specified options (see options given above). Output variables can be specified as:

- V(<circuit node>) to output the voltage at <circuit node>
- V(<circuit node>,<circuit node>) to output the voltage difference between the first <circuit node> and second <circuit node>
- I(<device>) to output current through a two terminal device
- I<lead abbreviation>(<device>) to output current into a particular lead of a three or more terminal device (see the Comments, below, for details)
- P(<device>) or W(<device>) to output the power dissipated/generated in a device. At this time, not all devices support power calculations. In addition, the results for semiconductor devices (D, J, M, Q and Z devices) and the lossless transmission device (T device) may differ from other simulators. Consult the Features Supported by Xyce Device Models table in section 2.3 and the individual sections on each device for more details.

- N(<device internal variable>) to output a specific device's internal variable. (The comments section below has more detail on this syntax.)
- {expression} to output an expression
- <device>:<parameter> to output a device parameter
- <model>:<parameter> to output a model parameter

When the analysis type is AC or HB, additional output variable formats are available:

- VR(<circuit node>) to output the real component of voltage response at a point in the circuit
- VI(<circuit node>) to output the imaginary component of voltage response at a point in the circuit
- VM(<circuit node>) to output the magnitude of voltage response
- VP(<circuit node>) to output the phase of voltage response
- VDB(<circuit node>) to output the magnitude of voltage response in decibels.
- VR(<circuit node>,<circuit node>) to output the real component of voltage response between two nodes in the circuit
- VI(<circuit node>,<circuit node>) to output the imaginary component of voltage response between two nodes in the circuit
- VM(<circuit node>,<circuit node>) to output the magnitude of voltage response between two nodes in the circuit
- VP(<circuit node>,<circuit node>) to output the phase of voltage response between two nodes in the circuit
- VDB(<circuit node>,<circuit node>) to output the magnitude of voltage response between two nodes in the circuit, in decibels
- IR(<device>) to output the real component of the current through a two terminal device
- II(<device>) to output the imaginary component of the current through a two terminal device
- IM(<device>) to output the magnitude of the current through a two terminal device
- IP(<device>) to output the phase of the current through a two terminal device
- IDB(<device>) to output the magnitude of the current through a two terminal device in decibels.

In AC analysis, outputting a voltage node without any of these optional designators results in output of the real and imaginary parts of the signal. Note that under AC analysis, printing of device lead currents, e.g. I(<device>), is not supported.

Note that when using the variable list for time domain output, usage of frequency domain functions like VDB can result in -Inf output being written to the output file. This is easily solved by defining the time

domain equivalent command to specify the correct output for time domain data.

Further explanation of current specification is in comments section below.

Comments

- Currents are positive flowing from node 1 to node 2 for two node devices, and currents are positive flowing into a particular lead for multi-terminal devices.
- `<circuit node>` is simply the name of any node in your top-level circuit, or `<subcircuit name>:<node>` to reference nodes that are internal to a subcircuit.
- `<device>` is the name of any device in your top-level circuit, or `<subcircuit name>:<device>` to reference devices that are internal to a subcircuit.
- `<lead abbreviation>` is a single character designator for individual leads on a device with three or more leads. For bipolar transistors these are: c (collector), b (base), e (emitter), and s (substrate). For mosfets, lead abbreviations are: d (drain), g (gate), s (source), and b (bulk). SOI transistors have: d, g, s, e (bulk), and b (body). For PDE devices, the nodes are numbered according to the order they appear, so lead currents are referenced like I1(`<device>`), I2(`<device>`), etc.
- The "lead current" method of printing from devices in Xyce is done at a low level with special code added to each device; the method is therefore only supported in specific devices that have this extra code. So, if `.PRINT I(Y)` does not work, for a device called Y, then you will need to attach an ammeter (zero-volt voltage source) in series with that device and print the ammeter's current instead.
- Lead currents of subcircuit ports are not supported. However, access is provided via specific node names (e.g., `X1:internalNodeName`) or specific devices (e.g., `X1:V3`) inside the subcircuit.
- Wildcards are partially supported on `.PRINT` lines. `V(*)` will print all of the node voltages in the circuit. `I(*)` will print all of the currents that are implemented in voltage sources. If, for example, an ammeter (zero-volt voltage source) is placed in series with a resistor then the current through that resistor would be included in the `I(*)` output.
- For STD formatted output, the values of the output variables are output as a series of columns (one for each output variable).
- When the command line option `-r <raw-file-name>` is used, all of the output is diverted to the *raw-file-name* file as a concatenation of the plots, and each plot includes all of the variables of the circuit. Using the `-a` options in conjunction with the `-r` option results in a raw file that is output all in ascii characters.
- Any output going to the same file from one simulation of **Xyce** results in the concatenation of output. However, if a simulation is re-run then the original output will we over-written.

- During analysis a number of output files may be generated. The selection of which files are created depends on a variety of factors, most obvious of which is the `.PRINT` command. See section 2.1 for more details.
- Frequency domain values are output as complex values for Raw, TecPlot and Probe formats when a complex variable is printed. For STD and CSV formats, the output appears in two columns, the real part followed by the imaginary part. The print variables `VR`, `VI`, `VM`, `VDB` and `VP` print the scalar values for the real part, imaginary part, magnitude, magnitude in decibels, and phase, respectively.
- When outputting a device or model parameter, it is usually necessary to specify both the device name and the parameter name, separated by a colon. For example, the saturation current of a diode model `DMOD` would be requested as `DMOD:IS`. Section 2.1.23 on "Device Parameters and Internal Variables" below gives more details and provides an example.
- The `N()` syntax is used to access internal solution variables that are not normally visible from the netlist, such as voltages on internal nodes and/or branch currents within a given device. The internal solution variables for each **Xyce** device are not given in the Reference Guide sections on those devices. However, if the user runs `Xyce -namesfile <filename> <netlist>` then **Xyce** will output into the first filename a list of all solution variables generated by that netlist. Section 2.1.23 on "Device Parameters and Internal Variables" below gives more details and provides an example.
- If multiple `.PRINT` lines are given for the same analysis type, the same output file name, and the same format, the variable lists of all matching `.PRINT` lines are merged together in the order found, and the resulting output is the same as if all the print line variable lists had been specified on a single `.PRINT` line.
- Attempting to specify multiple `.PRINT` lines for the same analysis type to the same file with different specifications of `FORMAT` is an error.
- **Xyce** should emit a warning or error message, similar to "Could not open filename" if: 1) the name of the output file is actually a directory name; or 2) the output file is in a subdirectory that does not already exist. **Xyce** will not create new subdirectories.
- The output filename specified with the -r command line option, to produce `FORMAT=RAW` output, should take precedence over a `FILE=` parameter specified on a `.PRINT` line.
- The print statements for some analysis types could result in multiple output files. For example, `.PRINT HB` will produce both frequency- and time-domain output, and place these in different files. The default name of these files is the name of the netlist followed by a data type suffix, followed by a format-specific extension.

  In **Xyce**, if a `FILE` option is given to such a print statement, only the "primary" data for that analysis type is sent to the named file. The secondary data is still sent to the default file name. This behavior may be subject to change in future releases.

For analysis types that can produce multiple files, special `.PRINT` lines have been provided to allow the user to control the handling of the additional files. These additional print line specifiers are enumerated in the analysis-specific sections below.

If one desires that all outputs for a given analysis type be given user-defined file names, it is necessary to use additional print lines with additional `FILE` options. For example, if one uses a `FILE` option to a `.PRINT HB` line, only frequency-domain data will be sent to the named file. To redirect the time-domain data to a file with a user-defined name, add a `.PRINT HB_TD` line. See the individual analysis types below for details of what additional print statements are available.

Print AC Analysis

AC Analysis generates two output files, the primary output is in the frequency domain and the initial conditions output is in the time domain.

Note that when using the `.PRINT AC` to create the variable list for DC type output, usage of frequency domain functions like `VDB` can result in -Inf output being written to the output file. This is easily solved by defining a `.PRINT AC_IC` command to specify the correct output for initial condition data.

Homotopy output can also be generated.

Table 2.10: Print AC Analysis Type

Trigger	Files	Columns/Description
`.PRINT AC`	*circuit-file*.FD.prn	INDEX FREQ
`.PRINT AC FORMAT=GNUPLOT`	*circuit-file*.FD.prn	INDEX FREQ
`.PRINT AC FORMAT=NOINDEX`	*circuit-file*.FD.prn	FREQ
`.PRINT AC FORMAT=CSV`	*circuit-file*.FD.csv	FREQ
`.PRINT AC FORMAT=RAW`	*circuit-file*.raw	FREQ
`Xyce -a` `.PRINT AC FORMAT=RAW`	*circuit-file*.raw	FREQ
`.PRINT AC FORMAT=TECPLOT`	*circuit-file*.FD.dat	FREQ
`.PRINT AC FORMAT=PROBE`	*circuit-file*.FD.csd	–
Add `.OP` To Netlist To Enable AC_IC Output		
`.PRINT AC_IC`	*circuit-file*.TD.prn	INDEX TIME
`.PRINT AC_IC FORMAT=GNUPLOT`	*circuit-file*.TD.prn	INDEX TIME
`.PRINT AC_IC FORMAT=CSV`	*circuit-file*.TD.csv	TIME
`.PRINT AC_IC FORMAT=RAW`	*circuit-file*.raw	TIME
`Xyce -a` `.PRINT AC_IC FORMAT=RAW`	*circuit-file*.raw	TIME

Table 2.10: Print AC Analysis Type

Trigger	Files	Columns/Description
`.PRINT AC_IC FORMAT=TECPLOT`	*circuit-file*.TD.dat	TIME
`.PRINT AC_IC FORMAT=PROBE`	*circuit-file*.TD.csd	–
Command Line Raw Override Output		
`Xyce -r`	*circuit-file*.raw	All circuit variables printed
`Xyce -r -a`	*circuit-file*.raw	All circuit variables printed
Additional Output Available		
`.OP`	*log file*	Operating point data
`.SENS` `.PRINT SENS`	see Print Sensitivity	
`.OPTIONS NONLIN CONTINUATION=<method>` `.PRINT HOMOTOPY`	see Print Homotopy	

Print DC Analysis

DC Analysis generates output based on the format specified by the `.PRINT` command.

Homotopy and sensitivity output can also be generated.

Table 2.11: Print DC Analysis Type

Trigger	Files	Columns/Description
`.PRINT DC`	*circuit-file*.prn	INDEX
`.PRINT DC FORMAT=GNUPLOT`	*circuit-file*.prn	INDEX
`.PRINT DC FORMAT=NOINDEX`	*circuit-file*.prn	–
`.PRINT DC FORMAT=CSV`	*circuit-file*.csv	–
`.PRINT DC FORMAT=RAW`	*circuit-file*.raw	–
`Xyce -a` `.PRINT DC FORMAT=RAW`	*circuit-file*.raw	–
`.PRINT DC FORMAT=TECPLOT`	*circuit-file*.dat	–
`.PRINT DC FORMAT=PROBE`	*circuit-file*.csd	–
Command Line Raw Override Output		
`Xyce -r`	*circuit-file*.raw	All circuit variables
`Xyce -r -a`	*circuit-file*.raw	All circuit variables
Additional Output Available		
`.OP`	*log file*	Operating point data
`.SENS` `.PRINT SENS`	see Print Sensitivity	

Table 2.11: Print DC Analysis Type

Trigger	Files	Columns/Description
.OPTIONS NONLIN CONTINUATION=<method> .PRINT HOMOTOPY		see Print Homotopy

Print Harmonic Balance Analysis

HB Analysis generates one output file in the frequency domain and one in the time domain based on the format specified by the .PRINT command. Additional startup and initial conditions output can be generated based on .OPTIONS commands.

Note that when using the .PRINT HB to create the variable list for time domain output, usage of frequency domain functions like VDB can result in -Inf output being written to the output file. This is easily solved by defining a .PRINT HB_TD, .PRINT HB_IC and .PRINT HB_STARTUP commands to specify the correct output for the time domain data.

Homotopy output can also be generated.

Table 2.12: Print HB Analysis Type

Trigger	Files	Columns/Description
.PRINT HB	*circuit-file*.HB.TD.prn *circuit-file*.HB.FD.prn *circuit-file*.hb_ic.prn	INDEX TIME INDEX FREQ INDEX TIME
.PRINT HB FORMAT=GNUPLOT	*circuit-file*.HB.TD.prn *circuit-file*.HB.FD.prn *circuit-file*.hb_ic.prn	INDEX TIME INDEX FREQ INDEX TIME
.PRINT HB FORMAT=NOINDEX	*circuit-file*.HB.TD.prn *circuit-file*.HB.FD.prn *circuit-file*.hb_ic.prn	TIME FREQ TIME
.PRINT HB FORMAT=CSV	*circuit-file*.HB.TD.csv *circuit-file*.HB.FD.csv *circuit-file*.hb_ic.csv	TIME FREQ TIME
.PRINT HB FORMAT=TECPLOT	*circuit-file*.HB.TD.dat *circuit-file*.HB.FD.dat *circuit-file*.hb_ic.dat	TIME FREQ TIME
.PRINT HB_FD	*circuit-file*.HB.FD.prn	INDEX FREQ
.PRINT HB_FD FORMAT=GNUPLOT	*circuit-file*.HB.FD.prn	INDEX FREQ
.PRINT HB_FD FORMAT=NOINDEX	*circuit-file*.HB.FD.prn	FREQ
.PRINT HB_FD FORMAT=CSV	*circuit-file*.HB.FD.csv	FREQ
.PRINT HB_FD FORMAT=TECPLOT	*circuit-file*.HB.FD.dat	FREQ
.PRINT HB_TD	*circuit-file*.HB.TD.prn	INDEX TIME
.PRINT HB_TD FORMAT=GNUPLOT	*circuit-file*.HB.TD.prn	INDEX TIME
.PRINT HB_TD FORMAT=NOINDEX	*circuit-file*.HB.TD.prn	TIME

Table 2.12: Print HB Analysis Type

Trigger	Files	Columns/Description
`.PRINT HB_TD FORMAT=CSV`	*circuit-file*.HB.TD.csv	TIME
`.PRINT HB_TD FORMAT=TECPLOT`	*circuit-file*.HB.TD.dat	TIME
Command Line Raw Override Output		
`Xyce -r`	*circuit-file*.raw	All circuit variables printed
`Xyce -r -a`	*circuit-file*.raw	All circuit variables printed
Startup Period		
`.OPTIONS HBINT STARTUPPERIODS=<n>` `.PRINT HB_STARTUP`	*circuit-file*.startup.prn	INDEX TIME
`.OPTIONS HBINT STARTUPPERIODS=<n>` `.PRINT HB_STARTUP FORMAT=GNUPLOT`	*circuit-file*.startup.prn	INDEX TIME
`.OPTIONS HBINT STARTUPPERIODS=<n>` `.PRINT HB_STARTUP FORMAT=NOINDEX`	*circuit-file*.startup.prn	TIME

`.OPTIONS HBINT STARTUPPERIODS=<n>`
`.PRINT HB_STARTUP FORMAT=CSV`
`.OPTIONS HBINT STARTUPPERIODS=<n>`
	circuit-file.startup.csv	TIME

`.OPTIONS HBINT STARTUPPERIODS=<n>`
`.PRINT HB_STARTUP FORMAT=TECPLOT`
`.OPTIONS HBINT STARTUPPERIODS=<n>`
	circuit-file.startup.dat	TIME

Initial Conditions		
`.OPTIONS HBINT SAVEICDATA=1` `.PRINT HB_IC`	*circuit-file*.hb_ic.prn	INDEX TIME
`.OPTIONS HBINT SAVEICDATA=1` `.PRINT HB_IC FORMAT=GNUPLOT`	*circuit-file*.hb_ic.prn	INDEX TIME
`.OPTIONS HBINT SAVEICDATA=1` `.PRINT HB_IC FORMAT=NOINDEX`	*circuit-file*.hb_ic.prn	TIME
`.OPTIONS HBINT SAVEICDATA=1` `.PRINT HB_IC FORMAT=CSV`	*circuit-file*.hb_ic.csv	TIME
`.OPTIONS HBINT SAVEICDATA=1` `.PRINT HB_IC FORMAT=TECPLOT`	*circuit-file*.hb_ic.dat	TIME
Additional Output Available		
`.OP`	*log file*	Operating point data
`.SENS` `.PRINT SENS`	see Print Sensitivity	
`.OPTIONS NONLIN CONTINUATION=<method>` `.PRINT HOMOTOPY`	see Print Homotopy	

Print Noise Analysis

NOISE Analysis generates two output files, the primary output is in the frequency domain and the initial conditions output is in the time domain.

Table 2.13: Print NOISE Analysis Type

Trigger	Files	Columns/Description
`.PRINT NOISE`	*circuit-file*.NOISE.prn	INDEX FREQ
`.PRINT NOISE FORMAT=GNUPLOT`	*circuit-file*.NOISE.prn	INDEX FREQ
`.PRINT NOISE FORMAT=NOINDEX`	*circuit-file*.NOISE.prn	FREQ
`.PRINT NOISE FORMAT=CSV`	*circuit-file*.NOISE.csv	FREQ
`.PRINT NOISE FORMAT=TECPLOT`	*circuit-file*.NOISE.dat	FREQ
Additional Output Available		
`.OP`	*log file*	Operating point data
`.OPTIONS NONLIN CONTINUATION=<method>` `.PRINT HOMOTOPY`	see Print Homotopy	

Print Transient Analysis

Transient Analysis generates time domain output based on the format specified by the `.PRINT` command.

Homotopy and sensitivty output can also be generated.

Table 2.14: Print Transient Analysis Type

Trigger	Files	Columns/Description
`.PRINT TRAN`	*circuit-file*.prn	INDEX TIME
`.PRINT TRAN FORMAT=GNUPLOT`	*circuit-file*.prn	INDEX TIME
`.PRINT TRAN FORMAT=NOINDEX`	*circuit-file*.prn	TIME
`.PRINT TRAN FORMAT=CSV`	*circuit-file*.csv	TIME
`.PRINT TRAN FORMAT=RAW`	*circuit-file*.raw	TIME
`Xyce -a` `.PRINT TRAN FORMAT=RAW`	*circuit-file*.raw	TIME
`.PRINT TRAN FORMAT=TECPLOT`	*circuit-file*.dat	TIME
`.PRINT TRAN FORMAT=PROBE`	*circuit-file*.csd	–
Command Line Raw Override Output		
`Xyce -r`	*circuit-file*.raw	All circuit variables printed
`Xyce -r -a`	*circuit-file*.raw	All circuit variables printed
Additional Output Available		
`.OP`	*log file*	Operating point data
`.SENS` `.PRINT SENS`	see Print Sensitivity	
`.OPTIONS NONLIN CONTINUATION=<method>` `.PRINT HOMOTOPY`	see Print Homotopy	

Print Homotopy

Homotopy output is generated by the inclusion of the `.OPTIONS NONLIN CONTINUATION=<method>` command.

Table 2.15: Print Homotopy

Trigger	Files	Columns/Description
`.OPTIONS NONLIN CONTINUATION=<method>` `.PRINT HOMOTOPY`	*circuit-file*.HOMOTOPY.prn	INDEX TIME
`.OPTIONS NONLIN CONTINUATION=<method>` `.PRINT HOMOTOPY FORMAT=GNUPLOT`	*circuit-file*.HOMOTOPY.prn	INDEX TIME
`.OPTIONS NONLIN CONTINUATION=<method>` `.PRINT HOMOTOPY FORMAT=NOINDEX`	*circuit-file*.HOMOTOPY.prn	TIME
`.OPTIONS NONLIN CONTINUATION=<method>` `.PRINT HOMOTOPY FORMAT=CSV`	*circuit-file*.HOMOTOPY.csv	TIME
`.OPTIONS NONLIN CONTINUATION=<method>` `.PRINT HOMOTOPY FORMAT=TECPLOT`	*circuit-file*.HOMOTOPY.dat	TIME
`.OPTIONS NONLIN CONTINUATION=<method>` `.PRINT HOMOTOPY FORMAT=PROBE`	*circuit-file*.HOMOTOPY.csd	–

Print Sensitivity

Sensitivity is enabled by inclusion of the .SENS command.

Table 2.16: Print Sensitivities

Trigger	Files	Columns/Description
`.SENS objfunc=<`obj`> p=[`p_1`1][,`p_n`]*` `.PRINT SENS`	*circuit-file*.SENS.prn	obj dobj/d(p_1) dobj/d(p_n)
`.SENS objfunc=<`obj`> p=[`p_1`1][,`p_n`]*` `.PRINT SENS FORMAT=GNUPLOT`	*circuit-file*.SENS.prn	obj dobj/d(p_1) dobj/d(p_n)
`.SENS objfunc=<`obj`> p=[`p_1`][,`p_n`]*` `.PRINT SENS FORMAT=TECPLOT`	*circuit-file*.SENS.dat	obj dobj/d(p_1) dobj/d(p_n)

Table 2.17: Print Transient Adjoint Sensitivities

Trigger	Files	Columns/Description
`.SENS objfunc=<`obj`> p=[`p_1`1][,`p_n`]*` `.PRINT TRANADJOINT`	*circuit-file*.TRADJ.prn	obj dobj/d(p_1) dobj/d(p_n)
`.SENS objfunc=<`obj`> p=[`p_1`][,`p_n`]*` `.PRINT TRANADJOINT FORMAT=TECPLOT`	*circuit-file*.TRADJ.dat	obj dobj/d(p_1) dobj/d(p_n)

Parameter Stepping

During parameter stepping, enabled with the `.STEP` command, the output generated by each of analysis types varies. Generally the FORMAT indicates this variation, however some combinations of analysis and format can result in additional variation.

The following table lists how the output differs for each analysis type and format.

Print Type	Format	Description
AC	STD	1, 3, 4, 11, 12, 13
AC	GNUPLOT	1, 3, 4, 11, 12, 13, 20
AC	CSV	4, 11
AC	PROBE	16
AC	TECPLOT	4, 12, 13, 18
AC	RAW	19
AC	RAW (Xyce -a)	19
AC_IC	STD	1, 4, 11, 12, 13
AC_IC	GNUPLOT	1, 4, 11, 12, 13, 20
AC_IC	CSV	4, 11
AC_IC	PROBE	16
AC_IC	TECPLOT	12, 13, 18
AC_IC	RAW	19
AC_IC	RAW (Xyce -a)	19
DC	STD	1, 11, 12
DC	GNUPLOT	1, 11, 12, 20
DC	CSV	11
DC	PROBE	17
DC	TECPLOT	4, 12, 13, 18
DC	RAW	19
DC	RAW (Xyce -a)	19
HB_TD	STD	1, 2, 4, 11, 12, 13
HB_TD	GNUPLOT	1, 2, 4, 11, 12, 13, 20
HB_TD	CSV	11
HB_TD	TECPLOT	12, 13, 18
HB_FD	STD	1, 3, 4, 11, 12, 13
HB_FD	GNUPLOT	1, 3, 4, 11, 12, 13, 20
HB_FD	CSV	4, 11
HB_FD	TECPLOT	4, 12, 13, 18
HB_IC	STD	1, 2, 4, 11, 12, 13

Print Type	Format	Description
HB_IC	GNUPLOT	1, 2, 4, 11, 12, 13, 20
HB_IC	CSV	11
HB_IC	TECPLOT	12, 13, 18
HB_STARTUP	STD	1, 2, 4, 11, 12, 13
HB_STARTUP	GNUPLOT	1, 2, 4, 11, 12, 13, 20
HB_STARTUP	CSV	11
HB_STARTUP	TECPLOT	12, 13, 18
TRAN	STD	1, 2, 11, 12
TRAN	GNUPLOT	1, 2, 11, 12, 20
TRAN	CSV	2, 11
TRAN	PROBE	17
TRAN	TECPLOT	2, 4, 12, 13, 18
TRAN	RAW	2, 19
TRAN	RAW (Xyce -a)	2, 19
Specialized Output Commands		
HOMOTOPY	STD	1, 2, 4, 11, 15
HOMOTOPY	GNUPLOT	1, 2, 4, 11, 15, 20
HOMOTOPY	CSV	2, 11
HOMOTOPY	PROBE	17
HOMOTOPY	TECPLOT	2, 4, 15, 18
SENSITIVITY	STD	1, 2, 11, 14
SENSITIVITY	GNUPLOT	1, 2, 11, 14, 20
SENSITIVITY	CSV	2, 11
SENSITIVITY	TECPLOT	2, 14, 18

Description	
1	INDEX column added to output variable list
2	TIME column added to output variable list
3	FREQ column added to output variable list
4	Frequency domain data written as Re(var) and Im(var)
11	INDEX resets to zero at start of each .STEP
12	Prints 'End of Xyce(TM) Parameter Sweep' at end of .STEP simulation
13	Prints 'End of Xyce(TM) Simulation' at end of non-.STEP simulation
14	Prints 'End of Xyce(TM) Sensitivity Simulation' at end of simulation

Description	
15	Prints 'End of Xyce(TM) Homotopy Simulation' at end of simulation
16	Two '#;' at the end of each .STEP (BUG)
17	One '#;' at end of each .STEP
18	New ZONE for each .STEP, and AUXDATA for each .STEP parameter
19	Prints 'Plotname: Step Analysis: Step s of n params' at the start of each .STEP
20	Inserts two blank lines before the data for steps 1,2,3,... where the first step is step 0

Device Parameters and Internal Variables

This subsection describes how to print out device parameters and device internal variables, via a simple V-R circuit example. In particular, the example given below gives illustrative examples of how to print out the voltage at a node (`V(1)`), the current through a device (`I(V1)`), the current through a device using using an internal solution variable (`N(V1_branch)`), a device parameter (`R1:R`) and the power dissipated by a device (`P(R1)`). It also shows how device parameters and internal variables can be used in a **Xyce** expression.

```
* filename is example.cir
.DC V1 1 2 1
V1 1 0 1
R1 1 0 2
.PRINT DC FORMAT=NOINDEX PRECISION=2 WIDTH=8
+ V(1) I(V1) N(V1_branch) R1:R P(R1) {R1:R*N(V1_branch)*I(V1)}
.END
```

The **Xyce** output would then be (where the `NOFORMAT`, `WIDTH` and `PRECISION` arguments were used mainly to format the example output for this guide):

```
V(1)        I(V1)     N(V1_BRANCH)    R1:R        P(R1)     {R1:R*N(V1_BRANCH)*I(V1)}
1.00e+00   -5.00e-01   -5.00e-01    2.00e+00    5.00e-01     5.00e-01
2.00e+00   -1.00e+00   -1.00e+00    2.00e+00    2.00e+00     2.00e+00
```

The internal solution variables for each **Xyce** device are typically not given in the Reference Guide sections on those devices. However, if for the example given above, the user runs `Xyce -namesfile example_names example.cir` then the file `example_names` would contain a list of the two solution variables that are accessible with the `N()` syntax on a `.PRINT` line. In this simple example, they are the voltage at Node 1 and the branch current through the voltage source `V1`. If `V1` was in a subcircuit then the `example_names` file would have shown the "fully-qualified" device name, including the subcircuit names.

```
HEADER
```

```
0     v1_branch
1             1
```

Additional (and more useful) examples for using the N() syntax to print out:

- The M, R, B and H internal variables for mutual inductors are given in Section 2.3.6. This includes an example where the mutual inductor is in a sub-circuit.
- The g_m (tranconductance), V_{th}, V_{ds}, V_{gs}, V_{bs}, and V_{dsat} internal variables for the BSIM3 and BSIM4 models for the MOSFET are given in Section 2.3.19.

In these two cases, only the M and R variables for the mutual inductors are actually solution variables. However, the `-namesfile` approach can still be used to determine the fully-qualified **Xyce** device names required to use the `N()` syntax.

2.1.24 .RESULT (Print results)

Outputs the value of user-specified expressions at the end of a simulation.

General Form `.RESULT {output variable}`

Examples

```
.RESULT {V(a)}
.RESULT {V(a)+V(b)}
```

Comments The `.RESULT` line must use an expression. The line `.RESULT V(a)` will result in a parse error.

Each `.RESULT` line must have only one expression. Multiple `.RESULT` lines can be used though to output multiple columns in the output `.res` file.

Xyce will not produce output for `.RESULT` statements if there are no `.STEP` statements in the netlist.

Example Netlist

`.RESULT` lines can be combined with `.STEP` lines to output the ending values of multiple simulation runs in one `.res` file, as shown in the following usage example. The resultant `.res` file will have four lines that give the final values of the expressions `{v(b)}` and `{v(b)*v(b)/2}` at time=0.75 seconds for all four requested combinations of `R2` and `v_amplitude`.

```
Simple Example of .RESULT capability with .STEP
R1 a b 10.0
R2 b 0 2.0

.GLOBAL_PARAM  v_amplitude=2.0
Va a 0 sin (5.0 {v_amplitude} 1.0 0.0 0.0)

.PRINT TRAN v(b) {v(b)*v(b)/2}
.TRAN 0 0.75

.STEP R2 1.0 2.0 1.0
.STEP v_amplitude 1.0 2.0 1.0

.RESULT {v(b)}
.RESULT {v(b)*v(b)/2}

.END
```

2.1.25 .SAVE (Save operating point conditions)

Stores the operating point of a circuit in the specified file for use in subsequent simulations. The data may be saved as .IC or .NODESET lines.

General Form

```
.SAVE [TYPE=<IC|NODESET>] [FILE=<filename>] [LEVEL=<all|none>]
+ [TIME=<save_time>]
```

Examples

```
.SAVE TYPE=IC FILE=mycircuit.ic
.SAVE TYPE=NODESET FILE=myothercircuit.ic

.include mycircuit.ic
```

Comments

The file created by .SAVE will contain .IC or .NODESET lines containing all the voltage node values at the DC operating point of the circuit. The default **TYPE** is NODESET. The default filename is *netlist.cir*.ic.

The resulting file may be used in subsequent simulations to obtain quick DC convergence simply by including it in the netlist, as in the third example line above. **Xyce** has no corresponding .LOAD statement.

The **LEVEL** parameter is included for compatability with HSPICE netlists. If none is specified, then no save file is created. The default **LEVEL** is all.

TIME is also an HSPICE compatibility parameter. This is unsupported in **Xyce**. **Xyce** outputs the save file only at time=0.0.

2.1.26 .SENS (Compute DC or transient sensitivities)

Computes sensitivies for a user-specificed objective function with respect to a user-specified list of circuit parameters.

General Form

```
.SENS objfunc=<output expression(s)> param=<circuit parameter(s)>
```

Examples

```
.SENS objfunc={0.5*(V(B)-3.0)**2.0} param=R1:R,R2:R
.options SENSITIVITY direct=1 adjoint=1

.SENS objfunc={I(VM)},{V(3)*V(3)} param= Q2N2222:bf
```

Comments

This capability can be applied to either DC or transient analysis. For both DC and transient, both direct and adjoint sensitivities are supported, and the user can optionally request either direct or adjoint sensitivities, or both.

Although **Xyce** will allow the user to specify both direct and adjoint, one would generally not choose to do both. The best choice of sensitivity method depends on the problem. For problems with a small number of parameters, and (possibly) lots of objective functions, then the direct method is a more efficient choice. For problems with large numbers of parameters, but a small number of objective functions, the adjoint method is more efficient.

For all variants of sensitivity analysis, it is necessary to specify circuit parameters on the `.SENS` line in a comma-separated list. Unlike the SPICE version, this capability will not automatically use every parameter in the circuit. It is also necessary for all variations of sensitivity analysis to specify at least one objective function. This capability will not assume any particular objective function. Also, it is possible to specify multiple objective functions, in a comma-separated list.

As noted, for transient analysis, both types of sensitivities are supported. Direct sensitivities are computed at each time step during the forward calculation. Transient adjoint sensitivities, in contrast, must be computed using a reverse time integration method. The reverse time integration must be performed after the original forward calculation is complete. As such, transient adjoint sensitivity calculations can be thought of as a post-processing step. One consequence of this is that transient adjoint output must be specified using the `.PRINT TRANADJOINT` type, rather than the `.PRINT SENS` type.

If transient adjoints are specified, the default behavior for the capability is for a transient sensitivity calculation be performed for each time step, even if the forward transient simulation consists of millions of steps. For adjoint calculations, this can be problematic, as adjoint methods (noted above) are not very efficient when applied to problems with a large number of objective functions. Each time step, from the point of view of transient adjoints, is effectively a separate objective function. As such, this isn't the best use of adjoints. One can specify a list of time points for which to compute transient adjoint sensitivities.

For many practical problems, the sensitivies at only one or a handful of points is needed, so this is a good way to mitigate the computational cost of adjoints.

2.1.27 .STEP (Step Parametric Analysis)

Calculates a full analysis (.DC, .TRAN, .AC, etc.) over a range of parameter values. This type of analysis is very similar to .DC analysis. Similar to .DC analysis, .STEP supports sweeps which are linear, decade logarithmic, octave logarithmic, or a list of values.

`LIN` Linear sweep
: The sweep variable is swept linearly from the starting to the ending value.

`OCT` Sweep by octaves
: The sweep variable is swept logarithmically by octaves.

`DEC` Sweep by decades
: The sweep variable is swept logarithmically by decades.

`LIST` Sweep over specified values
: The sweep variable is swept over an enumerated list of values.

Linear Sweeps

General Form

```
.STEP [LIN] <parameter name> <initial> <final> <step>
```

Examples

```
.STEP R1 45 50 5
.STEP V1 20 10 -1
.STEP LIN V1 20 10 -1
.STEP TEMP -45 -55 -10
.STEP C101:C 45 50 5
.STEP DLEAK:IS 1.0e-12 1.0e-11 1.0e-12

.global_param v1_val=10
V1 1 0 DC {v1_val}
.STEP v1_val 20 10 -1
```

Arguments and Options

`parameter name`
: Name of the parameter to be swept. This may be the special parameter name `TEMP` (the ambient simulation temperature), a device name, device instance or model parameter name, or global parameter name as defined in a `.global_param` statement. It may not be the name of a parameter defined in a `.param` statement.

  If a device name is given, the primary parameter for that device is taken as the parameter; in the first two examples above, the primary parameters of the devices R1 and V1 are stepped (resistance and DC voltage, respectively).

To specify a device instance parameter other than the device's primary parameter, use the syntax `<device name>:<parameter name>`, as in the fourth example above.

To sweep a device model parameter, use the syntax `<model name>:<parameter name>`, as in the fifth example above.

`initial`
: Initial value for the parameter.

`final`
: Final value for the parameter.

`step`
: Value that the parameter is incremented at each step.

Comments

For linear sweeps, the LIN keyword is optional.

STEP parameter analysis will sweep a parameter from its initial value to its final value, at increments of the step size. At each step of this sweep, it will conduct a full analysis (`.DC`, `.TRAN`, `.AC`, etc.) of the circuit.

The specification is similar to that of a `.DC` sweep, except that unlike `.DC`, only one parameter may be swept on each `.STEP` line. Multiple `.STEP` lines may be specified, forming nested step loops. The variables will be stepped in order such that the first `.STEP` line that appears in the netlist will be the innermost loop, and the last `.STEP` line will be the outermost.

Output, as designated by a `.PRINT` statement, is slightly more complicated in the case of a `.STEP` simulation. If the user has specified a `.PRINT` line in the input file, **Xyce** will output two files. All steps of the sweep will be output to a single file as usual, but with the results of each step appearing one after another with the "Index" column starting over at zero. Additionally, a file with a ".res" suffix will be produced indicating what parameters were used for each iteration of the step loops; this file will always be in columnar text format, irrespective of any `FORMAT=` option specified on `.PRINT` lines. If `.RESULT` lines (see section 2.1.24) appear in the netlist, the ".res" file will also contain columns for each expression given on the `.RESULT` lines, and the value of the result expression will be printed for each step taken.

Note that analysis lines in **Xyce** do not currently support use of expressions to define their parameters (e.g., end times for `.TRAN` analysis, or fundamental frequencies for `.HB` analysis), and so it is not possible to use stepped parameters to vary how the analysis will be run at each step. If each step requires different analysis parameters, this would have to be accomplished by performing separate runs of **Xyce**.

Decade Sweeps

General Form

```
.STEP DEC <sweep variable name> <start> <stop> <points>
```

Examples

```
.STEP DEC VIN 1 100 2
.STEP DEC R1 100 10000 3
.STEP DEC TEMP 1.0 10.0 3
```

Octave Sweeps

General Form

```
.STEP OCT <sweep variable name> <start> <stop> <points>
```

Examples

```
.STEP OCT VIN 0.125 64 2
.STEP OCT TEMP 0.125 16.0 2
.STEP OCT R1 0.015625 512 3
```

List Sweeps

General Form

```
.STEP <sweep variable name> LIST <val> <val> <val>...
```

Examples

```
.STEP VIN LIST 1.0 2.0 10. 12.0
.STEP TEMP LIST 8.0 21.0
```

2.1.28 .SUBCKT (Subcircuit)

The .SUBCKT statement begins a subcircuit definition by giving its name, the number and order of its nodes and the names and default parameters that direct its behavior. The .ENDS statement signifies the end of the subcircuit definition. See Section 2.3.30 for more information on using subcircuits with the X device.

General Form

```
.SUBCKT <name> [node]*
+ [PARAMS: [<name>=<value>]* ]
...
.ENDS
```

Examples

```
.SUBCKT OPAMP 10 12 111 112 13
...
.ENDS

.SUBCKT FILTER1 INPUT OUTPUT PARAMS: CENTER=200kHz,
+ BANDWIDTH=20kHz
...
.ENDS

.SUBCKT PLRD IN1 IN2 IN3 OUT1
+ PARAMS: MNTYMXDELY=0 IO_LEVEL=1
...
.ENDS

.SUBCKT 74LS01 A B Y
+ PARAMS: MNTYMXDELY=0 IO_LEVEL=1
...
.ENDS
```

Arguments and Options

`name`
: The name used to reference a subcircuit.

`node`
: An optional list of nodes. This is not mandatory since it is feasible to define a subcircuit without any interface nodes.

`PARAMS:`
: Keyword that provides values to subcircuits as arguments for use as expressions in the subcircuit. Parameters defined in the PARAMS: section may be used in expressions within the body of the subcircut and will take the default values specified in the subcircuit definition unless overridden by a PARAMS: section when the subcircuit is instantiated.

Comments

A subcircuit designation ends with a `.ENDS` command. The entire netlist between `.SUBCKT` and `.ENDS` is part of the definition. Each time the subcircuit is called via an `X` device, the entire netlist in the subcircuit definition replaces the `X` device.

There must be an equal number of nodes in the subcircuit call and in its definition. As soon as the subcircuit is called, the actual nodes (those in the calling statement) substitute for the argument nodes (those in the defining statement).

Node zero cannot be used in this node list, as it is the global ground node.

Subcircuit references may be nested to any level. Subcircuits definitions may also be nested; a `.SUBCKT` statement and its closing `.ENDS` may appear between another `.SUBCKT/.ENDS` pair. A subcircuit defined inside another subcircuit definition is local to the outer subcircuit and may not be used at higher levels of the circuit netlist.

Subcircuits should include only device instantiations and possibly these statements:

- `.MODEL` (model definition)
- `.PARAM` (parameter)
- `.FUNC` (function)

Models, parameters, and functions defined within a subcircuit are scoped to that definition. That is they are only accessible within the subcircuit definition in which they are included. Further, if a `.MODEL`, `.PARAM` or a `.FUNC` statement is included in the main circuit netlist, it is accessible from the main circuit as well as all subcircuits.

Node, device, and model names are scoped to the subcircuit in which they are defined. It is allowable to use a name in a subcircuit that has been previously used in the main circuit netlist. When the subcircuit is flattened (expanded into the main netlist), all of its names are given a prefix via the subcircuit instance name. For example, `Q17` becomes `X3:Q17` after expansion. After expansion, all names are unique. The single exception occurs in the use of global node names, which are not expanded.

Additional illustative examples of scoping are given in the “Working with Subcircuits and Models” section of the **Xyce** Users’ Guide [1] . Those examples apply to models and functions also.

2.1.29 .TRAN (Transient Analysis)

Calculates the time-domain response of a circuit for a specified duration.

General Form

```
.TRAN <initial step value> <final time value>
+ [<start time value> [<step ceiling value>]] [NOOP] [UIC]
+ [{schedule( <time>, <maximum time step>, ... )}]
```

Examples

```
.TRAN 1us 100ms
.TRAN 1ms 100ms 0ms .1ms
.TRAN 0 2.0e-3  {schedule( 0.5e-3, 0, 1.0e-3, 1.0e-6, 2.0e-3, 0 )}
```

Arguments and Options

`initial step value`
: Used to calculate the initial time step (see below).

`final time value`
: Sets the end time (duration) for the analysis.

`start time value`
: Sets the time at which output of the simulation results is to begin. Defaults to zero.

`step ceiling value`
: Sets a maximum time step. Defaults to ((final time value)-(start time value))/10, unless there are breakpoints (see below).

`NOOP`
: Specifies that no operating point calculation is to be performed.

`UIC` Specifies that no operating point calculation is to be performed, and that the specified initial condition (from .IC lines) should be used in its place. Unspecified values are set to zero. Finally, the .IC capability can only set voltage values, not current values.

`schedule(<time>, <maximum time step>, ...)`
: Specifies a schedule for maximum allowed time steps. The list of arguments, t_0, Δt_0, t_1, Δt_1, *etc.* implies that a maximum time step of Δt_0 will be used while the simulation time is greater than or equal to t_0 and less than t_1. A maximum time step of Δt_1 will be used when the simulation time is greater or equal to than t_1 and less than t_2. This sequence will continue for all pairs of t_i, Δt_i that are given in the {schedule()}. If Δt is zero or negative, then no maximum time step is enforced (other than hardware limits of the host computer).

Comments

The transient analysis calculates the circuit's response over an interval of time beginning with `TIME=0` and finishing at `<final time value>`. Use a `.PRINT` (print) statement to get the results of the transient analysis.

Before calculating the transient response **Xyce** computes a bias point for the circuit that is different from the regular bias point. This is necessary because at the start of a transient analysis, the independent sources can have different values than their DC values. Specifying `NOOP` on the `.TRAN` line causes **Xyce** to begin the transient analysis without performing the usual bias point calculation.

The time integration algorithms within **Xyce** use adaptive time-stepping methods that adjust the time-step size according to the activity in the analysis. The default ceiling for the internal time step is `(<final time value>-<start time value>)/10`. This default ceiling value is automatically adjusted if breakpoints are present, to ensure that there are always at least 10 time steps between breakpoints. If the user specifies a ceiling value, however, it overrides any internally generated ceiling values.

Xyce is not strictly compatible with SPICE in its use of the values on the `.TRAN` line. In SPICE, the first number on the `.TRAN` line specifies the printing interval. In **Xyce**, the first number is the `<initial step value>`, which is used in determining the initial step size. The actual initial step size is chosen to be the smallest of three quantities: the `<inital step value>`, the `<step ceiling value>`, or 1/200th of the time until the next breakpoint.

The third argument to `.TRAN` simply determines the earliest time for which results are to be output. Simulation of the circuit always begins at `TIME=0` irrespective of the setting of `<start time value>`.

2.1.30 Miscellaneous Commands

* (Comment)

A netlist comment line. Whitespace at the beginning of a line is also interpreted as a comment unless it is followed by a + symbol, in which case it treats the line as a continuation.

; (In-line Comment)

Add a netlist in-line comment.

+ (Line Continuation)

Continue the text of the previous line.

2.2 Expressions

Xyce supports use of mathematical expressions in several contexts:

- for the values of device instance and model parameters.
- in definition of parameters in `.PARAM` and `.GLOBAL_PARAM` statements.
- for output on `.PRINT` lines.

In all contexts where expressions are allowed, they should be enclosed in braces ({}). For netlist compatibility with other simulators they may be enclosed in single quotation marks instead (`'`), but these are simply replaced with braces at a very early stage of netlist parsing. It is recommended that the braces be used in netlists written specifically for **Xyce**.

The expression package in **Xyce** supports all standard arithmetic operators, trigonometric functions, a collection of arithmetic functions, and some functions to mimic the pulse, sine, exp, and sffm time-dependent functions in the independent current and voltage sources. These functions are listed in tables 2.21 and 2.22.

Please note that while curly braces should be used to enclose complete expressions, they may not be used inside expressions as a substitute for parentheses, as they may be in other simulators. Xyce will emit a generic fatal syntax error message when it encounters such usage.

Operators

Table 2.20: Operators

Class of Operator	Operator	Meaning
arithmetic	+	addition or string concatenation
	-	subtraction
	*	multiplication
	/	division
	**	exponentiation
logical[1]	~	unary NOT
	|	boolean OR
	^	boolean XOR
	&	boolean AND
relational	==	equality
	!=	non-equality
	>	greater-than
	>=	greater-than or equal
	<	less-than

Table 2.20: Operators

Class of Operator	Operator	Meaning
	<=	less-than or equal

Arithmetic Functions

Table 2.21: Arithmetic Functions

Function	Meaning	Explanation
	Arithmetic functions	
ABS(x)	$\|x\|$	absolute value of x
AGAUSS(μ,α,n)	$\mu - \alpha < result < \mu + \alpha$	Random number sampled from normal distribution with mean μ and standard deviation α/n The number returned will differ from the mean by at most α A deviation α will be n standard deviations from the mean.[1]
GAUSS(μ,α,n)	$\mu * (1 - \alpha) < result < \mu * (1 + \alpha)$	Random number sampled from normal distribution with mean μ and standard deviation $(\alpha * \mu)/n$ The number returned will differ from the mean by at most $\alpha * \mu$ A deviation $\alpha * \mu$ will be n standard deviations from the mean.[1]
DDT(x)	$\frac{d}{dt}x(t)$	time derivative of x
DDX(f(x),x)	$\frac{\partial}{\partial x}f(x)$	partial derivative of $f(x)$ with respect to x
IF(t,x,y)	x if t is true, y otherwise	t is an expression using the relational operators in Table 2.20.[2]
INT(x)	$\mathrm{sgn}(x)\lfloor\|x\|\rfloor$	integer part of the real variable x
LIMIT(x,y,z)	y if $x < y$ x if $y < x < z$ z if $x > z$	x limited to range y to z
M(x)	$\|x\|$	absolute value of x
MIN(x,y)	$\min(x, y)$	minimum of x and y
MAX(x,y)	$\max(x, y)$	maximum of x and y

[1] Logical and relational operators are used only with the `IF()` function.

Table 2.21: Arithmetic Functions

Function	Meaning	Explanation
PWR(x,y)	x^y	x raised to y power
POW(x,y)	x^y	x raised to y power
PWRS(x,y)	x^y if $x > 0$ 0 if $x = 0$ $-(-x)^y$ if $x < 0$	sign corrected x raised to y power
RAND()	$0 < result < 1$	random number between 0 and 1 sampled from a uniform distribution[1]
SDT(x)	$\int x(t)dt$	time integral of x
SGN(x)	+1 if $x > 0$ 0 if $x = 0$ -1 if $x < 0$	sign value of x
SIGN(x,y)	$\mathrm{sgn}(y)\lvert x\rvert$	sign of y times absolute value of x
STP(x)	1 if $x > 0$ 0 otherwise	step function
SQRT(x)	$\sqrt{x}$	square root of x
TABLE(x,y,z,*)	$f(x)$ where $f(y) = z$	piecewise linear interpolation, multiple (y,z) pairs can be specified
URAMP(x)	x if $x > 0$ 0 otherwise	ramp function
Exponential, logarithmic, and trigonometric functions		
ACOS(x)	$\arccos(x)$	result in radians
ACOSH(x)	$\cosh^{-1}(x)$	hyperbolic arccosine of x
ARCTAN(x)	$\arctan(x)$	result in radians
ASIN(x)	$\arcsin(x)$	result in radians
ASINH(x)	$\sinh^{-1}(x)$	hyperbolic arcsine of x
ATAN(x)	$\arctan(x)$	result in radians
ATANH(x)	$\tanh^{-1}(x)$	hyperbolic arctangent of x
ATAN2(x,y)	$\arctan(x/y)$	result in radians
COS(x)	$\cos(x)$	x in radians
COSH(x)	$\cosh(x)$	hyperbolic cosine of x
EXP(x)	e^x	e to the x power
LN(x)	$\ln(x)$	log base e
LOG(x)	$\log(x)$	log base 10

Table 2.21: Arithmetic Functions

Function	Meaning	Explanation
LOG10(x)	$\log(x)$	log base 10
SIN(x)	$\sin(x)$	x in radians
SINH(x)	$\sinh(x)$	hyperbolic sine of x
TAN(x)	$\tan(x)$	x in radians
TANH(x)	$\tanh(x)$	hyperbolic tangent of x

Spice Compatable Functions

Table 2.22: SPICE Compatibility Functions

Function	Explanation
SPICE_EXP(V1,V2,TD1,TAU1,TD2,TAU2)	SPICE style transient exponential V1 = initial value V2 = pulsed value TD1 = rise delay time TAU1 = rise time constant TD2 = fall delay time TAU2 = fall time constant
SPICE_PULSE(V1,V2,TD,TR,TF,PW,PER)	SPICE style transient pulse V1 = initial value V2 = pulsed value TD = delay TR = rise time TF = fall time PW = pulse width PER = period
SPICE_SFFM(V0,VA,FC,MDI,FS)	SPICE style transient single frequency FM V0 = offset VA = amplitude

[1]The random number functions `RAND`, `GAUSS`, and `AGAUSS` return a unique number per use in an expression, but once evaluated this number is constant for the entire run, even across `.STEP` iterations. Unless a specific seed is specified using the `-randseed` command line option, the random number generator will be seeded using the system "time" function. In all cases, **Xyce** will output text to the console indicating what seed is being used.

[2]Use of the `IF` function to create an expression that has step-function-like behavior as a function of a solution variable is highly likely to produce convergence errors in simulation. `IF` statements that have step-like behavior with an explicit time dependence are the exception, as the code will insert breakpoints at the discontinuities. Do not use step-function or other infinite-slope transitions dependent on variables other than time. Smooth the transition so that it is more easily integrated through. See the "Analog Behavioral Modeling" chapter of the **Xyce** Users Guide for guidance on using the `IF` function with the B-source device.

Table 2.22: Arithmetic Functions

Function	Explanation
	FC = carrier frequency
	MDI = modulation index
	FS = signal frequency
SPICE_SIN(V0,VA,FREQ,TD,THETA)	SPICE style transient sine wave
	V0 = offset
	VA = amplitude
	FREQ = frequency (hz)
	TD = delay
	THETA = damping factor

Information about the restrictions on expressions in specific contexts is given in the subsections that follow.

2.2.1 Expressions in .PARAM or .GLOBAL_PARAM Statements

Expressions used in .PARAM statements are the most highly constrained. They must evaluate to a constant at the beginning of a run, and therefore must involve only numerical constants and other previously defined .PARAMs. The value of the parameter will be computed when the netlist is parsed, and will replace the name wherever it is used.

Example: .PARAM SQUARES=5.0

Example: .PARAM SHEETRES=25

Example: .PARAM RESISTANCE={SQUARES*SHEETRES}

Global parameters are somewhat less constrained. These parameters are allowed to depend on parameters defined in .PARAMS or .GLOBAL_PARAMS statements, and may contain special variables such as TIME or TEMP. They may not contain any references to solution variables or lead currents.

Example: .PARAM dTdt=.01

Example: .GLOBAL_PARAM Temperature={27+dTdt*TIME}

2.2.2 Expressions in .PRINT Lines

Expressions on .PRINT lines may contain references to parameters defined in either .PARAM or .GLOBAL_PARAM statements, device parameters using the syntax <device name>:<parameter name>, and may also contain solution variables.

```
*example with .print expressions
.PARAM RES=50
R1 1 0 {RES}
V1 1 0 sin(0 5 100khz)
.tran 1u 1m
*Print power dissipated through resistor,
*and actual resistance used in the R1
*device
.print tran {V(1)*V(1)/RES} {R1:R}
.end
```

2.2.3 Limitations on Using Complex Values in Expressions

The **Xyce** expression library was not written to work with complex quantities. If AC voltages are used in expressions then the expression library uses only the real part. While the expression library was expanded recently to recognize the various components of complex quantities, such as real and imaginary parts (VR(A) and VI(A)) or the magnitude and phase (VM(A) or VP(A)), the arithmetic operators in the **Xyce** expression library only work on real quantities. The following approaches can be used to work around those limitations.

The voltage drop between two nodes N0 and N1 can be printed with the two-node variant of the V() accessor:

```
.PRINT AC  V(N0,N1)
```

For any other sort of complex arithmetic, the expression must use the real and imaginary parts of the variables in question. An example is as follows, where the real and imaginary parts of the desired quantities are calculated and printed separately:

```
.PRINT AC {VR(N0)-VR(N1)} {VI(N0)-VI(N1)}
+ {VR(N0)*VR(N1)-VI(N0)*VI(N1)} {VR(N0)*VI(N1)+VI(N0)*VR(N1)}
```

instead of:

```
.PRINT AC {V(N0)-V(N1)}  {V(N0)*V(N1)}
```

2.2.4 Expressions for Device Instance and Model Parameters

Expressions of constants and .PARAM parameters may be used for the values of any device parameters in instance and model lines.

Except in very specific devices, expressions used for device parameter values must evaluate to a time-independent constant, and must not contain dependence on solution variables such as nodal voltages or currents. In these cases, .GLOBAL_PARAM parameters may also be used as long as they are not time-dependent.

```
*example of use of expressions for device parameters
.PARAM RES=50
.GLOBAL_PARAM theSaturationCurrent=1.5e-14
R1 1 0 {RES}
V1 1 0 sin(0 5 100khz)
D1 1 0 DMODEL
.MODEL D DMODEL IS=theSaturationCurrent

.step theSaturationCurrent 1e-14 5e-14 1e-14
```

Some parameters of specific devices are exceptions to the general rule. These parameters have no restrictions and may depend on any parameters, time, or solution variables in the netlist:

- The V or I instance parameters of the B source.
- The CONTROL instance parameter of the switch (S device).
- The C (capacitance) instance parameter for the capacitor.
- The coupling coefficient instance parameter for the *LINEAR* mutual inductor (K device with no model card specified)

These specific instance parameters may be time-depdendent (i.e. they may reference the TIME special variable, but may not depend on any solution variables:

- The TEMP instance parameter of all devices.
- The L (inductance) parameter of the inductor.
- The R (resistance) parameter of the resistor.
- The R, RESISTIVITY, DENSITY, HEATCAPACITY and THERMAL_HEATCAPACITY parameters of the thermal resistor (resistor level 2).

2.2.5 Special PSpice POLY expression

The POLY keyword, available in the E,F,G, H and B dependent sources, is provided to simplify migration of netlists from PSpice to **Xyce**. POLY provides a compact method of specifying polynomial

expressions in which the variables in the polynomial are specified followed by an ordered list of polynomial coefficients. All expressions specified with POLY are ultimately translated by **Xyce** into an equivalent, straightforward polynomial expression in a B source. Since a straightforward polynomial expression can be easier to read, there is no real benefit to using POLY except to support legacy netlists imported from PSpice.

There are three different syntax forms for POLY, which can be a source of confusion. The E and G sources (voltage-dependent voltage or current sources) use one form, the F and H sources (current-dependent voltage or current sources) use a second form, and the B source (general nonlinear source) a third form. During input processing, any of the E,F,G or H sources that use nonlinear expressions are first converted into an equivalent B source, and then any B sources that use the POLY shorthand are further converted into standard polynomial expressions. This section describes how the compact form will be translated into the final form that is used internally.

All three formats of POLY express the same three components: a number of variables involved in the expression (N, the number in parentheses after the POLY keyword), the variables themselves, and an ordered list of coefficients for the polynomial terms. Where they differ is in how the variables are expressed.

Voltage-controlled sources

The E and G sources are both voltage-controlled, and so their POLY format requires specification of two nodes for each voltage on which the source depends, i.e. the positive and negative nodes from which a voltage drop is computed. There must therefore be twice as many nodes as the number of variables specified in parentheses after the POLY keyword:

```
Epoly 1 2 POLY(3) n1p n1m n2p n2m n3p n3m ...
```

In this example, the voltage between nodes 1 and 2 is determined by a polynomial whose variables are V(n1p,n1m), V(n2p,n2m), V(n3p,n3m). Not shown in this example are the polynomial coefficients, which will be described later.

Current-controlled sources

The F and H sources are both current-controlled, and so their POLY format requires specification of one voltage source name for each current on which the source depends. There must therefore be exactly as many nodes as the number of variables specified in parentheses after the POLY keyword:

```
Fpoly 1 2 POLY(3) V1 V2 V3 ...
```

In this example, the voltage between nodes 1 and 2 is determined by a polynomial whose variables are I(V1), I(V2), and I(V3). Not shown in this example are the polynomial coefficients, which will be described later.

B sources

Finally, the most general form of POLY is that used in the general nonlinear dependent source, the B source. In this variant, each specific variable must be named explicitly (i.e. not simply by node name or by voltage source name), because currents and voltages may be mixed as needed.

```
Bpoly 1 2 V={POLY(3) I(V1) V(2,3) V(3) ...}

Bpoly2 1 2 I={POLY(3) I(V1) V(2,3) V(3) ...}
```

In these examples, the source between nodes 1 and 2 is determined by a polynomial whose variables are I(V1), V(2,3), and V(3). In the first example, the polynomial value determines the voltage between nodes 1 and 2, and in the second the current.

The E, F, G and H formats are all converted internally in a first step to the B format. Thus the following pairs of sources are exactly equivalent:

```
Epoly 1 2 POLY(3) n1p n1m n2p n2m n3p n3m ...

BEpoly 1 2 V={POLY(3) V(n1p,n1m) V(n2p,n2m) V(n3p,n3m) ...

Fpoly 1 2 POLY(3) V1 V2 V3 ...

BFpoly 1 2 V={POLY(3) I(V1) I(V2) I(V3) ...
```

After conversion to the B source form, the POLY form is finally converted to a normal expression using the coefficients and variables given.

Coefficients are given in a standard order, and the polynomial is built up by terms until the list of coefficients is exhausted. The first coefficient is the constant term of the polynomial, followed by the coefficients of linear terms, then bi-linear, and so on. For example:

```
Epoly 1 2 POLY(3) n1p n1m n2p n2m n3p n3m 1 .5 .5 .5
```

In this example, the constant term is 1.0, and the coefficients of the three terms linear in the input variables are 0.5. Thus, this E source is precisely equivalent to the general B source:

```
BEstandard 1 2 V={1.0 + .5*V(n1p,n1m) + .5*V(n2p,n2m) +.5*V(n3p,n3m)}
```

The standard ordering for coefficients is:

POLY(N) $X_1 \ldots X_N C_0\ C_1 \ldots C_N\ C_{11} \ldots C_{1N}\ C_{21} \ldots C_{N1} \ldots C_{NN}\ C_{1^2 1} \ldots C_{1^2 N} \ldots$

with the polynomial then being:

$$Value = C_0 + \sum_{j=1}^{N} C_j X_j + \sum_{i=1}^{N}\sum_{j=1}^{N} C_{ij} X_i X_j + \sum_{i=1}^{N}\sum_{j=1}^{N} C_{i^2 j} X_i^2 X_j + \ldots$$

Here we have used the general form X_i for the ith variable, which may be either a current or

voltage variable in the general case.

It should be reiterated that the `POLY` format is provided primarily for support of legacy PSpice netlists that use the feature, and that its compactness may be a disadvantage in readability of the netlist and may be more prone to usage error. **Xyce** users are therefore advised that use of the more straightforward expression format in the `B` source may be more appropriate when crafting original netlists for use in **Xyce**. Since **Xyce** converts `POLY` format expressions to the simpler format internally, there is no performance benefit to use of `POLY`.

2.3 Devices

Xyce supports many devices, with an emphasis on analog devices, including sources, subcircuits and behavioral models. This section serves as a reference for the devices supported by **Xyce**. Each device is described separately and includes the following information, if applicable:

- a description and an example of the correct netlist syntax.
- the matching model types and their description.
- the matching list of model parameters and associated descriptions.
- the corresponding characteristic equations for the model (as required).
- references to publications on which the model is based.

User-defined models may be implemented using the `.MODEL` (model definition) statement, and macromodels can be created as subcircuits using the `.SUBCKT` (subcircuit) statement.

Please note that the characteristic equations are provided to give a general representation of the device behavior. The actual **Xyce** implementation of the device may be slightly different in order to improve, for example, the robustness of the device.

Table 2.23 gives a summary of the device types and the form of their netlist formats. Each of these is described below in detail.

Table 2.23: Analog Device Quick Reference.

Device Type	Letter	Typical Netlist Format
Nonlinear Dependent Source (B Source)	B	B<name> <+ node> <- node> + <I or V>={<expression>}
Capacitor	C	C<name> <+ node> <- node> [model name] <value> + [IC=<initial value>]
Diode	D	D<name> <anode node> <cathode node> + <model name> [area value]
Voltage Controlled Voltage Source	E	E<name> <+ node> <- node> <+ controlling node> + <- controlling node> <gain>
Current Controlled Current Source	F	F<name> <+ node> <- node> + <controlling V device name> <gain>
Voltage Controlled Current Source	G	G<name> <+ node> <- node> <+ controlling node> + <- controlling node> <transconductance>
Current Controlled Voltage Source	H	H<name> <+ node> <- node> + <controlling V device name> <gain>
Independent Current Source	I	I<name> <+ node> <- node> [[DC] <value>] + [AC [magnitude value [phase value]]] + [transient specification]

Table 2.23: Analog Device Quick Reference.

Device Type	Letter	Typical Netlist Format
Mutual Inductor	K	K<name> <inductor 1> [<ind. n>*] + <linear coupling or model>
Inductor	L	L<name> <+ node> <- node> [model name] <value> + [IC=<initial value>]
JFET	J	J<name> <drain node> <gate node> <source node> + <model name> [area value]
MOSFET	M	M<name> <drain node> <gate node> <source node> + <bulk/substrate node> [SOI node(s)] + <model name> [common model parameter]*
Lossy Transmission Line (LTRA)	O	O<name> <A port (+) node> <A port (-) node> + <B port (+) node> <B port (-) node> + <model name>
Bipolar Junction Transistor (BJT)	Q	Q<name> <collector node> <base node> + <emitter node> [substrate node] + <model name> [area value]
Resistor	R	R<name> <+ node> <- node> [model name] <value> + [L=<length>] [W=<width>]
Voltage Controlled Switch	S	S<name> <+ switch node> <- switch node> + <+ controlling node> <- controlling node> + <model name>
Transmission Line	T	T<name> <A port + node> <A port - node> + <B port + node> <B port - node> + <ideal specification>
Digital Devices	U	U<name> <type> <digital power node> + <digital ground node> [node]* <model name>
Independent Voltage Source	V	V<name> <+ node> <- node> [[DC] <value>] + [AC [magnitude value [phase value]]] + [transient specification]
Subcircuit	X	X<name> [node]* <subcircuit name> + [PARAMS:[<name>=<value>]*]
Current Controlled Switch	W	W<name> <+ switch node> <- switch node> + <controlling V device name> <model name>
Digital Devices, Y Type (deprecated)	Y<type>	Y<type> <name> [node]* <model name>
PDE Devices	YPDE	YPDE <name> [node]* <model name>
Accelerated masses	YACC	YACC <name> <acceleration> <velocity> <position> + [x0=<initial position>] [v0=<initial velocity>]
Memristor Device	YMEMRISTOR	YMEMRISTOR <name> <+ node> <- node> <model name>
MESFET	Z	Z<name> <drain node> <gate node> <source node> + <model name> [area value]

Table 2.24: Features Supported by Xyce Device Models

Device	Comments	Branch Current	Power	Analytic Sensi-tivity	Stationary Noise
Capacitor	Age-aware, semiconductor	Y	Y	Y	
Inductor	Coupled mutual inductors (see below)	Y	Y	Y	
Linear and Nonlinear Mutual Inductor		Y	Y		
Resistor (Level 1)	Normal and Semiconductor	Y	Y	Y	Y
Resistor (Level 2)	Thermal Resistor	Y	Y		
Diode (Level 1)		Y	Y	Y	Y
Diode (Level 2)	Addition of PSpice enhancements	Y	Y		
Diode (Level 200)	JUNCAP200 model	Y	Y	Y	Y
Independent Voltage Source (VSRC)		Y	Y	Y	
Independent Current Source (ISRC)		Y	Y	Y	
Voltage Controlled Voltage Source (VCVS)		Y	Y		
Voltage Controlled Current Source (VCCS)		Y	Y		
Current Controlled Voltage Source (CCVS)		Y	Y		
Current Controlled Current Source (CCCS)		Y	Y		
Nonlinear Dependent Source (B Source)		Y	Y		

Table 2.24: Features Supported by Xyce Device Models

Device	Comments	Branch Current	Power	Analytic Sensi-tivity	Stationary Noise
Bipolar Junction Transistor (BJT) (Level 1)		Y	Y	Y	Y
Bipolar Junction Transistor (BJT) (Level 10)	Vertical Bipolar Intercompany (VBIC) model, version 1.2	Y	Y	Y	N
Bipolar Junction Transistor (BJT) (Level 11)	Vertical Bipolar Intercompany (VBIC) model, version 1.3 (3-terminal)	Y	Y	Y	Y
Bipolar Junction Transistor (BJT) (Level 12)	Vertical Bipolar Intercompany (VBIC) model, version 1.3 (4-terminal)	Y	Y	Y	Y
Bipolar Junction Transistor (BJT) (Level 23)	FBH (Ferdinand-Braun-Institut für Höchstfrequenztechnik) HBT model, version 2.1	Y	Y	Y	N
Bipolar Junction Transistor (BJT) (Level 230)	HICUM Level 0	Y	Y	Y	Y
Bipolar Junction Transistor (BJT) (Level 234)	HICUM Level 2	Y	Y	Y	Y
Bipolar Junction Transistor (BJT) (Level 504)	MEXTRAM version 504.12.1	Y	Y	Y	Y
Bipolar Junction Transistor (BJT) (Level 505)	MEXTRAM version 504.12.1 (with self-heating)	Y	Y	Y	Y
Junction Field Effect Transistor (JFET) (Level 1)	SPICE-compatible JFET model	Y	Y		
Junction Field Effect Transistor (JFET) (Level 2)	Shockley JFET model	Y	Y		
MESFET		Y	Y		
MOSFET (Level 1)		Y	Y		Y
MOSFET (Level 2)	SPICE level 2 MOSFET	Y	Y		Y
MOSFET (Level 3)		Y	Y		Y

Table 2.24: Features Supported by Xyce Device Models

Device	Comments	Branch Current	Power	Analytic Sensi-tivity	Stationary Noise
MOSFET (Level 6)	SPICE level 6 MOSFET	Y	Y		Y
MOSFET (Level 9)	BSIM3 model	Y	Y		Y
MOSFET (Level 10)	BSIM SOI model	Y	Y		
MOSFET (Level 14 or 54)	BSIM4 model	Y	Y		
MOSFET (Level 18)	VDMOS general model	Y	Y		
MOSFET (Level 77)	BSIM6 model version 6.1.1	Y	Y	Y	Y
MOSFET (Level 102)	Legacy PSP model	Y	Y	Y	Y
MOSFET (Level 103)	PSP model	Y	Y	Y	Y
MOSFET (Level 107)	BSIM-CMG version 107.0.0	Y	Y	Y	Y
MOSFET (Level 110)	BSIM-CMG version 110.0.0	Y	Y	Y	Y
MOSFET (Level 301)	EKV model version 3.0.1	Y	Y	Y	Y
MOSFET (Level 2000)	MVS ETSOI model version 2.0.0	Y	Y	Y	Y
MOSFET (Level 2001)	MVS HEMT model version 2.0.0	Y	Y	Y	Y
Transmission Line (TRA)	Lossless	Y	Y		
Transmission Line (LTRA)	Lossy				
Lumped Transmission Line	Lossy or Lossless				

Table 2.24: Features Supported by Xyce Device Models

Device	Comments	Branch Current	Power	Analytic Sensi-tivity	Stationary Noise
Controlled Switch (S,W) (VSWITCH/ISWITCH)	Voltage or current controlled	Y	Y		
Generic Switch (SW)	Controlled by an expression	Y	Y		
PDE Devices (Level 1)	one-dimensional	Y			
PDE Devices (Level 2)	two-dimensional	Y			
Digital (Level 1)	Behavioral Digital	NA	NA		
ACC	Accelerated mass device, used for simulation of electromechanical and magnetically-driven machines	NA	NA		
Power Grid	Separate models for Branch, Bus Shunt, Transformer and Generator Bus. The Generator Bus model supports reactive power (Q) limiting				
Memristor	TEAM formulation	Y	Y		
Memristor	Yakopcic	Y	Y		
Memristor	PEM Formulation	Y	Y		

2.3.1 Voltage Nodes

Devices in a netlist are connected between *nodes*, and all device types in **Xyce** require at least two nodes on each instance line. Section 2.3.2 lists the characters that are legal and illegal in **Xyce** node and device names.

Except for global nodes (below), voltage node names appearing in a subcircuit that are not listed in the subcircuit's argument list are accessible only to that subcircuit; devices outside the subcircuit cannot connect to local nodes.

Global nodes

A special syntax is used to designate certain nodes as *global* nodes. Any node whose name starts with the two characters "$G" is a global node, and such nodes are available to be used in any subcircuit. A typical usage of such global nodes is to define a `VDD` or `VSS` signal that all subcircuits need to be able to access, but without having to provide `VSS` and `VDD` input nodes to every subcircuit. In this case, a global `$GVDD` node would be use for the VDD signal.

The node named `0` is a special global node. Node `0` is always ground, and is accessible to all levels of a hierarchical netlist.

Subcircuit Nodes

Hierarchical netlists may be created using `.SUBCKT` [2.1.28] to define common subcircuit types, and `X` [2.3.30] lines to create instances of those subcircuits. There are two types of nodes associated with such subcircuits, *interface* nodes and *internal* nodes.

Interface nodes are the nodes named on the `.SUBCKT` line. These are effectively local aliases internal to the subcircuit definition for the node names used on the `X` instance lines. Internal nodes are nodes inside the subcircuit definition that are strictly local to that subcircuit. Inside a subcircuit, these node names may be used without restriction in device instance lines and expressions on `B` source lines.

There are some circumstances when it is desirable to access internal nodes of a subcircuit from outside that subcircuit. **Xyce** provides a syntax that allows this to be done in *some* contexts. The primary context in which this is supported is on `.PRINT` lines, to allow the user to print out signals that are usually local to a subcircuit.

The syntax used by **Xyce** to refer to nodes within a subcircuit is to prefix the name of the node with the full path of subcircuit instances in which the node is contained, with colons (:) separating the instance names. So, to reference a node "A" that is inside a subcircuit instance called "Xnot1" inside another subcircuit instance called "Xmain", one would refer to "Xmain:Xnot1:A"

The same syntax works on `.PRINT` lines even if the subcircuit node is one of the interface nodes on the `.SUBCKT` line, but those nodes can also be accessed by using the names of the nodes at the higher level of circuit hierarchy that are used on its instance line.

```
* Netlist file demonstrating subcircuit node access
V1  1   0   1
X1  1   2   demosubc
X2  2   0   demosubc
.subckt demosubc A B
R1 A C 1
R2 C B 1
.ends

.dc V1 1 5 1

*V(X1:A) and V(1) are the same signal.
*V(X1:C) is the internal C node of the X1 instance
*V(X2:C) is the internal C node of the X2 instance
*V(X1:B), V(X2:A) and V(2) are the same signal
.print DC V(X1:C) V(X2:C) V(X1:A) V(1)  V(X1:B) V(X2:A) V(2)
.end
```

Subcircuit nodes may also be accessed from outside of the subcircuit in `B` source voltage or current expressions, though this usage violates the strict hierarchy of the netlist. The one difference between this usage and `.PRINT` usage is that it is not possible to use the subcircuit node syntax to access interface nodes. These must be accessed using the node names being used on the instance line, as in the "V(1)" example in the netlist fragment above.

2.3.2 Legal Characters in Node and Device Names

Xyce node names and device names can consist of any printable ASCII characters, with the following exceptions and caveats which may be different than other SPICE-like circuit simulators. The exceptions are:

- White space (space, tab, newline) is not allowed.
- Parentheses ("(" or ")"), braces ("{" or "}"), commas, colons, semi-colons, double quotes and single quotes are also not allowed, since they do not work correctly in node names or device names in all netlist contexts in **Xyce**.

The caveats are as follows:

- The star character (*) is allowed in both node names and device names. However, `.PRINT TRAN V(*)` has a special meaning in **Xyce**. So, the single-character node name of * is discouraged.
- Global nodes in **Xyce** begin with the two characters "$G".
- The node named `0` ("zero") is a special global node, which is always the ground node.

2.3.3 Lead Currents and Power Calculations

For some devices, such as independent voltage and current sources, the current through that device is a "solution" variable. For other devices, the current through the device is a "lead current", whose value is calculated during a post-processing step. This approach has ramifications in **Xyce** for the availability and accuracy of lead current values. In particular, both lead currents and power calculations need to have been explicitly enabled for a given device, analysis type (e.g., `.AC`) or netlist command (e.g., `.MEASURE`).

For voltage sources, both V and I are solution variables. So, their accuracy is more likely to be limited by the nonlinear solver tolerances (`RELTOL` and `ABSTOL`). The lead current accuracy, for a device like the resistor, can also be limited by the right-hand side tolerance `RHSTOL`. So, the calculated lead currents through very small resistances (e.g., 1e-12) may be inaccurate if the default solver tolerances for **Xyce** are used.

Lead currents have the following additional limitations:

- They are not enabled for `.AC` analyses.
- They are not allowed in the expression controlling a B-Source.
- They do not work for `.RESULT` statements.

Lead currents and power calculations are available in `.MEASURE` and `.FOUR` statements.

At this time the power calculations are only supported for `.DC` and `.TRAN` analysis types and for a limited set of devices. In addition, the results for semiconductor devices (D, J, M, Q and Z devices) and the lossless transmission device (T device) may differ from other simulators. Consult the Features Supported by Xyce Device Models table in section 2.3 and the individual sections on each device for more details.

As an example, the power supplied or dissipated by the voltage source `V` is calculated as $I \cdot \Delta V$ where the voltage drop is calculated as $(V_+ - V_-)$ and positive current flows from V_+ to V_-. Dissipated power has a positive sign, while supplied power has a negative sign.

An important note is that the power calculations are also a post-processing step, which places a limit on the accuracy of circuit-wide "energy conservation" calculations (e.g., total power supplied by sources - total power dissipated in non-source devices) in **Xyce**. The accuracy of the inputs (`V` and `I`) to the power calculations is limited by the nonlinear solver and right-hand side tolerances, as noted above, and the error in the power calculations is upper-bounded by the sum of the product-terms of `V*(error in I)` and `I*(error in V)`.

2.3.4 Capacitor

Symbol ⊣⊢

Instance Form

```
C<device name> <(+) node> <(-) node> [model name] [value]
+ [device parameters]
```

Model Form

```
.MODEL <model name> C [model parameters]
.MODEL <model name> CAP [model parameters]
```

Examples

```
CM12 2 4 5.288e-13
CLOAD 1 0 4.540pF IC=1.5V
CFEEDBACK 2 0 CMOD 1.0pF
CAGED 2 3 4.0uF D=0.0233 AGE=86200
CSOLDEP 3 0 C={40u + V(ref)}
```

Parameters and Options

`device name`
: The name of the device.

`(+) node`
`(-) node`
: Polarity definition for a positive voltage across the capacitor. The first node is defined as positive. Therefore, the voltage across the component is the first node voltage minus the second node voltage.

`model name`
: If `model name` is omitted, then `value` is the capacitance in farads. If [model name] is given then the value is determined from the model parameters; see the capacitor value formula below.

`value`
: Positional specification of device parameter C (capacitance). Alternately, this can be specified as a parameter, `C=<value>`, or in the (optional) model.

`device parameters`
: Parameters listed in Table 2.25 may be provided as space separated `<parameter>=<value>` specifications as needed. Any number of parameters may be specified.

`model parameters`
: Parameters listed in Table 2.26 may be provided as space separated `<parameter>=<value>` specifications as needed. Any number of parameters may be specified.

Comments

Positive current flows through the capacitor from the `(+)` node to the `(-)` node. In general, capacitors should have a positive capacitance value (`<value>` property). In all cases, the capacitance must not be zero.

However, cases exist when a negative capacitance value may be used. This occurs most often in filter designs that analyze an RLC circuit equivalent to a real circuit. When transforming from the real to the RLC equivalent, the result may contain a negative capacitance value.

In a transient run, negative capacitance values may cause the simulation to fail due to instabilities they cause in the time integration algorithms.

The power stored or released from the capacitor is calculated with $I \cdot \Delta V$ where the voltage drop is calculated as $(V_+ - V_-)$ and positive current flows from V_+ to V_-.

For compatibility with PSpice, either `C` or `CAP` can be used in a `.MODEL` statement for a capacitor.

The Multiplicity Factor (M) can be used to specify multiple, identical capacitors in parallel. The effective capacitance becomes C*M. The M value need not be an integer. It can be any positive real number. M can not be used as a model parameter.

Device Parameters

Table 2.25: Capacitor Device Instance Parameters

Parameter	Description	Units	Default
`AGE`	Age of capacitor	hour	0
`C`	Capacitance	F	1e-06
`D`	Age degradation coefficient	–	0.0233
`IC`	Initial voltage drop across device	V	0
`L`	Semiconductor capacitor width	m	1
`M`	Multiplicity Factor	–	1
`TC1`	Linear Temperature Coefficient	$^\circ C^{-1}$	0
`TC2`	Quadratic Temperature Coefficient	$^\circ C^{-2}$	0
`TEMP`	Device temperature	°C	Ambient Temperature
`W`	Semiconductor capacitor length	m	1e-06

In addition to the parameters shown in the table, the capacitor supports a vector parameter for the temperature correction coefficients. `TC1=<linear coefficient>` and `TC2=<quadratic coefficient>` may therefore be specified compactly as `TC=<linear coefficient>,<quadratic coefficient>`.

Model Parameters

Table 2.26: Capacitor Device Model Parameters

Parameter	Description	Units	Default
`C`	Capacitance multiplier	–	1
`CJ`	Junction bottom capacitance	F/m^2	0
`CJSW`	Junction sidewall capacitance	F/m	0
`DEFW`	Default device width	m	1e-06
`NARROW`	Narrowing due to side etching	m	0
`TC1`	Linear temperature coefficient	°C^{-1}	0
`TC2`	Quadratic temperature coefficient	°C^{-2}	0
`TNOM`	Nominal device temperature	°C	Ambient Temperature

Capacitor Equations

Capacitance Value Formula

If `[model name]` is specified, then the capacitance is given by:

$$\mathbf{C} \cdot (1 + \mathbf{TC1} \cdot (T - T_0) + \mathbf{TC2} \cdot (T - T_0)^2)$$

where `C` is the base capacitance specified on the device line and is normally positive (though it can be negative, but not zero). T_0 is the nominal temperature (set using $\mathbf{TNOM}$ option).

Age-aware Formula

If $\mathbf{AGE}$ is given, then the capacitance is:

$$\mathbf{C}[1 - \mathbf{D} \log(\mathbf{AGE})]$$

Semiconductor Formula

If `[model name]` and $\mathbf{L}$ and $\mathbf{W}$ are given, then the capacitance is:

$$\mathbf{CJ}(\mathbf{L} - \mathbf{NARROW})(\mathbf{W} - \mathbf{NARROW}) + 2 \cdot \mathbf{CJSW}(\mathbf{L} - \mathbf{W} + 2 \cdot \mathbf{NARROW})$$

Solution-Dependent Capacitor

If the capacitance (`C`) is set equal to an expression then a “solution-dependent” capacitor is used, where the capacitance is a function of other simulation variables. The formulas for temperature-dependence and age-dependence, given above, then use that calculated `C` value.

The restrictions for this formulation are:

- The expression must only use solution variables, which are node voltages and also branch currents for source devices.
- The expression must not use time derivatives.
- Capacitance (`C`) is the only instance or model parameter that is allowed to be solution-dependent.

Other Restrictions and Caveats

A netlist parsing error will occur if:

- Neither the `C` nor `L` instance parameters are specified.
- The `A` instance parameter is specified for a semiconductor capacitor (which is specified via `L`, `W` and `CJSW`).

If both the `C` and `L` instance parameters are specified then `C` will be used, rather than the semiconductor formulation.

2.3.5 Inductor

Symbol

Instance Form

```
L<name> <(+) node> <(-) node> [model] <value> [device parameters]
```

Model Form

```
.MODEL <model name> L [model parameters]
.MODEL <model name> IND [model parameters]
```

Examples

```
L1 1 5 3.718e-08
LM 7 8 L=5e-3 M=2
LLOAD 3 6 4.540mH IC=2mA
Lmodded 3 6 indmod 4.540mH
.model indmod L (L=.5 TC1=0.010 TC2=0.0094)
```

Parameters and Options

`(+) node`
`(-) node`
: Polarity definition for a positive voltage across the inductor. The first node is defined as positive. Therefore, the voltage across the component is the first node voltage minus the second node voltage.

`initial value`
: The initial current through the inductor during the bias point calculation.

Comments

In general, inductors should have a positive inductance value. The inductance must not be zero. Also, a netlist parsing error will occur if no value is specified for the inductance.

However, cases exist when a negative value may be used. This occurs most often in filter designs that analyze an RLC circuit equivalent to a real circuit. When transforming from the real to the RLC equivalent, the result may contain a negative inductance value.

The power stored or released from the inductor is calculated with $I \cdot \Delta V$ where the voltage drop is calculated as $(V_+ - V_-)$ and positive current flows from V_+ to V_-.

If a model name is given, the inductance is modified from the value given on the instance line by the parameters in the model card. See “Inductance Value Formula” below.

When an inductor is named in the list of coupled inductors in a mutual inductor device line (see page 138) , and that mutual inductor is of the nonlinear-core type, the `<value>` is interpreted as a number of turns rather than as an inductance in Henries.

For compatibility with PSpice, either `L` or `IND` can be used in a `.MODEL` statement for an inductor.

The Multiplicity Factor (`M`) can be used to specify multiple, identical inductors in parallel. The effective inductance becomes `L/M`. However, the value for the `IC` instance parameter is not multiplied by the `M` value. The `M` value need not be an integer. It can be any positive real number. `M` can not be used as a model parameter.

Device Parameters

Table 2.27: Inductor Device Instance Parameters

Parameter	Description	Units	Default
IC	Initial current through device	A	0
L	Inductance	henry	0
M	Multiplicity Factor	–	1
TC1	Linear Temperature Coefficient	$^\circ C^{-1}$	0
TC2	Quadratic Temperature Coefficient	$^\circ C^{-2}$	0
TEMP	Device temperature	°C	Ambient Temperature

Model Parameters

Table 2.28: Inductor Device Model Parameters

Parameter	Description	Units	Default
IC	Initial current through device	A	0
L	Inductance Multiplier	–	1
TC1	First order temperature coeff.	$^\circ C^{-1}$	0
TC2	Second order temperature coeff.	$^\circ C^{-2}$	0
TNOM	Reference temperature	°C	27

In addition to the parameters shown in the table, the inductor supports a vector parameter for the temperature correction coefficients. TC1=<linear coefficient> and TC2=<quadratic coefficient> may therefore be specified compactly as TC=<linear coefficient>,<quadratic coefficient>.

Inductor Equations

Inductance Value Formula

If [model name] is specified, then the inductance is given by:

$$\mathbf{L}_{base} \cdot \mathbf{L} \cdot (1 + \mathbf{TC1} \cdot (T - T_0) + \mathbf{TC2} \cdot (T - T_0)^2)$$

where $\mathbf{L}_{base}$ is the base inductance specified on the device line and is normally positive (though it can be negative, but not zero). $\mathbf{L}$ is the inductance multiplier specified in the model card. T_0 is the nominal temperature (set using $\mathbf{TNOM}$ option).

2.3.6 Mutual Inductors

Symbol

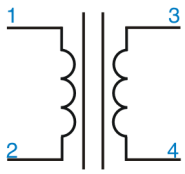

Instance Form

```
K<name> L<inductor name> [L<inductor name>*]
+ <coupling value> [model name]
```

Model Form

```
.MODEL <model name> CORE [model parameters]
```

Examples

```
ktran1 l1 l2 l3 1.0
KTUNED L3OUT  L4IN .8
KTRNSFRM LPRIMARY LSECNDRY 1
KXFRM L1 L2  L3  L4 .98 KPOT_3C8
```

Parameters and Options

`inductor name`

Identifies the inductors to be coupled. The inductors are coupled and in the dot notation the dot is placed on the first node of each inductor. The polarity is determined by the order of the nodes in the L devices and not by the order of the inductors in the K statement.

If more than two inductors are given on a single K line, each inductor is coupled to all of the others using the same coupling value.

`coupling value`

The coefficient of mutual coupling, which must be between -1.0 and 1.0.

This coefficient is defined by the equation

`<coupling value>` = $\frac{M_{ij}}{\sqrt{L_i L_j}}$

where

L_i is the inductance of the ith named inductor in the K-line

M_{ij} is the mutual inductance between L_i and L_j

For transformers of normal geometry, use 1.0 as the value. Values less than 1.0 occur in air core transformers when the coils do not completely overlap.

`model name`

If `model name` is present, four things change:

- The mutual coupling inductor becomes a nonlinear, magnetic core device.

- The inductors become windings, so the number specifying inductance now specifies the number of turns.
- The list of coupled inductors could be just one inductor.
- If two or more inductors are listed, each inductor is coupled to all others through the magnetic core.
- A model statement is required to specify the model parameters.

Comments Lead currents and power calculations are supported for the component inductors in both linear and nonlinear mutual inductors. They are not supported for the composite mutual inductor though. So, if `L1` is a component inductor for mutual inductor `K1`, then requests for `I(L1)`, `P(L1)` and `W(L1)` will return lead current and power values as defined in Section 2.3.5. However, any usage of `I(K1)`, `P(K1)` and `W(K1)` will result in a **Xyce** netlist parsing error.

Model Parameters

Table 2.29: Nonlinear Mutual Inductor Device Model Parameters

Parameter	Description	Units	Default
`A`	Thermal energy parameter	A/m	1000
`ALPHA`	Domain coupling parameter	–	5e-05
`AREA`	Mean magnetic cross-sectional area	cm^2	0.1
`BETAH`	Modeling constant	–	0.0001
`BETAM`	Modeling constant	–	3.125e-05
`BHSIUNITS`	Flag to report B and H in SI units	–	0
`C`	Domain flexing parameter	–	0.2
`CLIM`	Value below which domain flexing parameter will be treated as zero.	–	0.005
`CONSTDELVSCALING`	Use constant scaling factor to smooth voltage difference over first inductor	V	false
`DELVSCALING`	Smoothing coefficient for voltage difference over first inductor	V	1000
`FACTORMS`	Flag to save state variables	–	0
`GAP`	Effective air gap	cm	0
`INCLUDEMEQU`	Flag to include the magnetics in the solution.	–	true
`K`	Domain anisotropy parameter	A/m	500
`KIRR`	Domain anisotropy parameter	A/m	500
`LEVEL`	for pspice compatibility – ignored	–	0
`MEQNSCALING`	M-equation scaling	–	1
`MS`	Saturation magnetization	A/m	1e+06

Table 2.29: Nonlinear Mutual Inductor Device Model Parameters

Parameter	Description	Units	Default
MVARSCALING	M-variable scaling.	–	1
OUTPUTSTATEVARS	Flag to save state variables	–	0
PACK	for pspice compatibility – ignored	–	0
PATH	Total mean magnetic path	cm	1
PZEROTOL	Tolerance for nonlinear zero crossing	–	0.1
REQNSCALING	R-equation scaling	–	1
RVARSCALING	R-variable scaling	–	1
TC1	First order temperature coeff.	–	0
TC2	Second order temperature coeff.	–	0
TNOM	Reference temperature	°C	27

Note that **Xyce**'s default value for the GAP parameter as zero. Some simulators will use non-zero values of the GAP as a default. When using netlists from other simulators in **Xyce**, ensure that the default parameters are consistent.

Special Notes

The coupling coefficient of the linear mutual inductor (i.e. a mutual inductor without a core model) is permitted to be a time- or solution variable-dependent expression. This is intended to allow simulation of electromechnical devices in which there might be moving coils that interact with fixed coils.

Additionally, for linear mutual inductors, different coupling terms can be applied to different pairs of inductors with this syntax:

```
L1 1 2 2.0e-3
L2 0 3 8.1e-3
L3 3 4 8.1e-3
ktran1 l1 l2 0.7
ktran2 l2 l3 0.9
ktran3 l1 l3 0.99
```

Nonlinear mutual inductors can output $B(t)$ and $H(t)$ variables so that one can plot $B - H$ loops. On the `.print` line the B and H variables are accessible using the node output syntax as in `n( non-linear-inductor-name_b )` for B and `n( non-linear-inductor-name_h )` for H. A confusing aspect of this is that the non-linear inductor name is the *internal* name used by **Xyce**. For example, consider this circuit which defines a nonlinear mutual inductor at both the top level of the circuit and within a subcircuit:

```
* Test Circuit for Mutually Coupled Inductors
```

```
VS 0 1 SIN(0 169.7 60HZ)
R1 1 2 1K
R2 3 0 1K
L1 2 0 10
L2 3 0 20
K1 L1 L2 0.75 txmod
.model txmod core

.subckt mysub n1 n2 n3
r1s n1 n2 1000
r2s n3 0  1000
L1s n2 0  10
L2s n3 0  20
k1s L1s L2s 0.75 txmod
.ends

xtxs 1 4 5 mysub

.TRAN 100US 25MS

* output the current through each inductor and the B & H values.
.PRINT TRAN I(L1) I(L2) n(ymin!k1_b)  n(ymin!k1_h)
+ I(xtxs:L1s)  I(xtxs:l2s) n(xtxs:ymin!k1s_b) n(xtxs:ymin!k1s_h)

.END
```

The internal, **Xyce** name of the non-linear mutual inductor is `YMIN!K1` or `ymin!k1` as the name is not case-sensitive. The device `k1s` is declared within a subcircuit called `xtxs`. Thus, its full name is `xtxs:ymin!k1s`. The reason for this is that both the linear and non-linear mutual inductors are devices that are collections of other devices, inductors in this case. Rather than use one of the few remaining single characters left to signify a new device, **Xyce** uses `Y` devices as an indicator of a extended device set, where the characters after the `Y` denote the device type and then the device name. Here, `ymin` means a `min` device which is a *mutual-inductor, non-linear* device. Thus, to print the B or H variable of the non-linear mutual inductor called `k1` one would use `n(ymin!k1_b)` and `n(ymin!k1_h)` respectively for a `.print` line that looks like this:

```
.PRINT TRAN I(L1) I(L2) n(ymin!k1_b)  n(ymin!k1_h)
```

And if the mutual inductor is in a subcircuit called `xtxs` then the `.print` line would look like this:

```
.PRINT TRAN I(xtxs:L1s)  I(xtxs:l2s) n(xtxs:ymin!k1s_b) n(xtxs:ymin!k1s_h)
```

The above example also demonstrates how one outputs the current through inductors that are part of mutual inductors. The syntax is `I( inductor name )`.

Note that while MKS units are used internally in **Xyce**, B and H are output by default in the SI units of Gauss for B and Oersted for H. To convert B to units of Tesla divide **Xyce**'s output by $10,000$. To convert H to units of A/m divide **Xyce**'s output by $4\pi/1000$. Additionally, one can set the `.model CORE` parameter `BHSIUNITS` to 1 to force B and H to be output in MKS units.

Finally, one can access the B and H data via the `.model CORE` line. On the nonlinear mutual inductor's `.model` line, set the option `OUTPUTSTATEVARS=1`. This will cause **Xyce** to create a unique file for each nonlinear mutual inductor that uses this `.model` line with a name of the form `Inductor_device_name`. There are five columns of data in this file: time (t), magnetic moment (M), total current flux (R), flux density (B) and magnetic field strength (H). As with data output on the `.print` line, SI units are used such that B is output with units of Gauss and H in Oersted. As mentioned earlier, setting the model flag `BHSIUNITS` to 1 causes the output of B and H uses MKS units of Tesla and A/m respectively.

Mutual Inductor Equations

The voltage to current relationship for a set of linearly coupled inductors is:

$$V_i = \sum_{j=1}^{N} c_{ij} \sqrt{L_i L_j} \frac{dI_j}{dt} \tag{2.1}$$

Here, V_i is the voltage drop across the ith inductor in the coupled set. The coupling coefficient between a pair of inductors is c_{ij} with a value typically near unity and L is the inductance of a given inductor which has units of *Henry's* (1 Henry $= 1H = Volt \cdot s/Amp$)

For nonlinearly coupled inductors, the above equation is expanded to the form:

$$V_i = \left[1 + \left(1 - \frac{\ell_g}{\ell_t}\right) P(M, I_1 ... I_N)\right] \sum_{j=1}^{N} Lo_{ij} \frac{dI_j}{dt} \tag{2.2}$$

This is similar in form to the linearly coupled inductor equation. However, the coupling has become more complicated as it now depends on the magnetic moment created by the current flow, M. Additionally, there are geometric factors, ℓ_g and ℓ_t which are the effective air gap and total mean magnetic path for the coupled inductors. The matrix of terms, Lo_{ij} is defined as

$$Lo_{ij} = \frac{\mu_0 A_c N_i N_j}{\ell_t} \tag{2.3}$$

and it represents the physical coupling between inductors i and j. In this expression, N_i is the number of windings around the core of inductor i, μ_0 is the magnetic permeability of free space which has units of Henries per meter and a value of $4\pi \times 10^{-7}$ and A_c is the mean magnetic cross-sectional area.

The magnetic moment, M is defined by:

$$\frac{dM}{dt} = \frac{1}{\ell_t} P \sum_{i=1}^{N} N_i \frac{dI_i}{dt} \tag{2.4}$$

and the function P is defined as:

$$P = \frac{cM'_{an} + (1-c)M'_{irr}}{1 + \left(\frac{\ell_g}{\ell_t} - \alpha\right) cM'_{an} + \frac{\ell_g}{\ell_t}(1-c)M'_{irr}} \tag{2.5}$$

If $c <$ CLIM, then c is treated as zero in the above equation and **Xyce** simplifies the formulation. In this case, the magnetic-moment equation will not be needed and it will be be dropped form the formulation. One can controll this behavior by modifying the value of CLIM.

The remaining functions are:

$$M'_{an} = \frac{M_s A}{(A + |H_e|)^2} \tag{2.6}$$

$$H_e = H + \alpha M \tag{2.7}$$

$$H = H_{app} - \frac{\ell_g}{\ell_t} M \tag{2.8}$$

$$H_{app} = \frac{1}{\ell_t} \sum_{i=1}^{N} N_i I_i \tag{2.9}$$

$$M'_{irr} = \frac{\Delta M sgn(q) + |\Delta M|}{2\left(K_{irr} - \alpha|\Delta M|\right)} \tag{2.10}$$

$$\Delta M = M_{an} - M \tag{2.11}$$

$$M_{an} = \frac{M_s H_e}{A + |H_e|} \tag{2.12}$$

$$q = \text{DELVSCALING}\Delta V \tag{2.13}$$

Xyce dynamically modifies DELVSCALING to be $1000/$ Maximum Voltage Drop over the first inductor. This typically produces accurate results for both low voltage and high voltage applicaitons. However, it is possible to use a fixed scaling by setting the model parameter CONSTDELVSCALING to true and then setting DELVSCALING to the desired scaling value.

In **Xyce**'s formulation, we define R as:

$$R = \frac{dH_{app}}{dt} = \frac{1}{\ell_t} \sum_{i=1}^{N} N_i \frac{dI_i}{dt} \tag{2.14}$$

This simplifies the M equation to:

$$\frac{dM}{dt} = PR \tag{2.15}$$

Xyce then solves for the additional variables M and R when modeling a nonlinear mutual inductor device.

B-H Loop Calculations

To calculate B-H loops, H is used as defined above and B is a derived quantity calculated by:

$$B = \mu_0 (H + M) \tag{2.16}$$

$$= \mu_0 \left[H_{app} + \left(1 - \frac{\ell_g}{\ell_t}\right) M \right] \tag{2.17}$$

Converting Nonlinear to Linear Inductor Models

At times one may have a model for nonlinear mutual inductor, but wish to use a simpler linear model in a given circuit. To convert a non-linear model to an equivalent linear form, one can start by equating the coupling components of equations 2.1 and 2.2 as:

$$c_{ij}\sqrt{L_i L_j} = \left[1 + \left(1 - \frac{\ell_g}{\ell_t}\right) P(M, I_1 ... I_N)\right] Lo_{ij} \tag{2.18}$$

In the above relationship, i and j represent the ith and jth inductors. Since we would like to equate the ith inductor's nonliner properties to its linear properties, we will substitute $i \rightarrow j$ and simplify assuming steady state where $d/dt = 0$ and $M(t) = 0$.

$$L_i = \frac{1}{c_{ii}} \left\{ 1 + \left(1 - \frac{\ell_g}{\ell_t}\right) \left[\frac{c\frac{Ms}{A}}{1 + \left(\frac{\ell_g}{\ell_t} - \alpha\right)\frac{Ms}{A}} \right] \right\} \frac{\mu A_c}{\ell_t} N_i^2 \tag{2.19}$$

In the above equatin, c_{ii} represents the coupling coefficient between the ith inductor with itself. This will likely be 1 unless there are very unusual geometry considerations. Note, that the terms A, Ms, A_c, μ, ℓ_g and ℓ_t all have units of length within them and must use the same unit for this relationship to be valid. Specifically, μ has units of Henery's per meter and A and Ms have units of Amps per meter. A_c, ℓ_g and ℓ_p have units of length^2 and length respectively, but the length unit used in the model statement is cm^2 and cm respectively. Thus, one must use consistent units such as meters for A_c, ℓ_g and ℓ_p in equation 2.19 for a valid inductance approximation.

2.3.7 Resistor

Symbol

Instance Form

```
R<name> <(+) node> <(-) node> [model name] [value] [device parameters]
```

Model Form

```
.MODEL <model name> R [model parameters]
.MODEL <model name> RES [model parameters]
```

Examples

```
R1 1 2 2K TEMP=27
RM 4 5 R=4e3 M=2
RLOAD 3 6 RTCMOD 4.540 TEMP=85
.MODEL RTCMOD R (TC1=.01 TC2=-.001)
RSEMICOND 2 0 RMOD L=1000u W=1u
.MODEL RMOD R (RSH=1)
```

Parameters and Options

`(+) node`
`(-) node`
: Polarity definition for a positive voltage across the resistor. The first node is defined as positive. Therefore, the voltage across the component is the first node voltage minus the second node voltage. Positive current flows from the positive node (first node) to the negative node (second node).

`model name`
: If `[model name]` is omitted, then `[value]` is the resistance in Ohms. If `[model name]` is given then the resistance is determined from the model parameters; see the resistance value formula below.

`value`
: Positional specification of device parameter R (resistance). Alternately, this can be specified as a parameter, `R=<value>`, or in the (optional) model.

`device parameters`
: Parameters listed in Table 2.30 may be provided as space separated `<parameter>=<value>` specifications as needed. Any number of parameters may be specified.

Comments

Resistors can have either positive or negative resistance values (R). A zero resistance value (R) is also allowed.

The power dissipated in the resistor is calculated with $I \cdot \Delta V$ where the voltage drop is calculated as $(V_+ - V_-)$ and positive current flows from V_+ to V_-. The

power accessors (`P()` and `W()`) are supported for both the level 1 resistor and the level 2 (thermal) resistor.

For compatibility with PSpice, either `R` or `RES` can be used in a `.MODEL` statement for a resistor.

The Multiplicity Factor (`M`) can be used to specify multiple, identical resistors in parallel. The effective resistance becomes `R/M`. The `M` value need not be an integer. It can be any positive real number. `M` can not be used as a model parameter.

Device Parameters

Table 2.30: Resistor Device Instance Parameters

Parameter	Description	Units	Default
DTEMP	Device Temperature – For compatibility only. Parameter is NOT used	°C	0
L	Length	m	0
M	Multiplicity Factor	–	1
R	Resistance	Ω	1000
TC1	Linear Temperature Coefficient	$°C^{-1}$	0
TC2	Quadratic Temperature Coefficient	$°C^{-2}$	0
TEMP	Device temperature	°C	Ambient Temperature
W	Width	m	0

In addition to the parameters shown in the table, the resistor supports a vector parameter for the temperature correction coefficients. TC1=<linear coefficient> and TC2=<quadratic coefficient> may therefore be specified compactly as TC=<linear coefficient>,<quadratic coefficient>.

Model Parameters

Table 2.31: Resistor Device Model Parameters

Parameter	Description	Units	Default
DEFW	Default Instance Width	m	1e-05
NARROW	Narrowing due to side etching	m	0
R	Resistance Multiplier	–	1
RSH	Sheet Resistance	Ω	0
TC1	Linear Temperature Coefficient	$°C^{-1}$	0
TC2	Quadratic Temperature Coefficient	$°C^{-2}$	0
TNOM	Parameter Measurement Temperature	°C	Ambient Temperature

Note: There is no model parameter for Default Instance Length. The use of the semiconductor resistor model requires the user to specify a non-zero value for the instance parameter L.

Resistor Equations

Resistance Value Formula

If `[model name]` is included, then the resistance is:

$$\mathbf{R} \cdot (1 + \mathbf{TC1} \cdot (T - T_0) + \mathbf{TC2} \cdot (T - T_0)^2)$$

If $\mathbf{L}$ and $\mathbf{W}$ are given, the resistance is:

$$\mathbf{RSH} \frac{[\mathbf{L} - \mathbf{NARROW}]}{[\mathbf{W} - \mathbf{NARROW}]}$$

Thermal (level=2) Resistor

Xyce supports a thermal resistor model, which is associated with level=2.

Thermal Resistor Instance Parameters

Table 2.32: Resistor Device Instance Parameters

Parameter	Description	Units	Default
`A`	Area of conductor	m^2	0
`DENSITY`	Resistor material density (unused)	kg/m^3	0
`HEATCAPACITY`	Resistor material volumetric heat capacity	$J/(m^3K)$	0
`L`	Length of conductor	m	0
`M`	Multiplicity Factor	–	1
`OUTPUTINTVARS`	Debug Output switch	–	false
`R`	Resistance	Ω	1000
`RESISTIVITY`	Resistor material resistivity	Ω m	0
`TEMP`	Device temperature	°C	Ambient Temperature
`THERMAL_A`	Area of material thermally coupled to conductor	m^2	0
`THERMAL_HEATCAPACITY`	Volumetric heat capacity of material thermally coupled to conductor	$J/(m^3K)$	0
`THERMAL_L`	Length of material thermally coupled to conductor	m	0
`W`	Width of conductor	m	0

Thermal Resistor Model Parameters

Table 2.33: Resistor Device Model Parameters

Parameter	Description	Units	Default
DEFW	Default Instance Width	m	1e-05
DENSITY	Resistor material density (unused)	kg/m^3	0
HEATCAPACITY	Resistor material volumetric heat capacity	$J/(\mathrm{m}^3\mathrm{K})$	0
NARROW	Narrowing due to side etching	m	0
R	Resistance Multiplier	–	1
RESISTIVITY	Resistor material resistivity	Ω m	0
RSH	Sheet Resistance	Ω	0
TC1	Linear Temperature Coefficient	$^\circ\mathrm{C}^{-1}$	0
TC2	Quadratic Temperature Coefficient	$^\circ\mathrm{C}^{-2}$	0
THERMAL_HEATCAPACITY	Volumetric heat capacity of material thermally coupled to conductor	$J/(\mathrm{m}^3\mathrm{K})$	0
TNOM	Nominal device temperature	°C	Ambient Temperature

2.3.8 Diode

Symbol

Instance Form `D<name> <(+) node> <(-) node> <model name> [area value]`

Model Form `.MODEL <model name> D [model parameters]`

Examples

```
DCLAMP 1 0 DMOD
D2 15 17 SWITCH 1.5
```

Parameters and Options

`(+) node`
`(-) node`
: The anode and the cathode.

`area value`
: Scales IS, ISR, IKF, RS, CJO, and IBV, and has a default value of 1. IBV and BV are both specified as positive values.

Comments The diode is modeled as an ohmic resistance (`RS/area`) in series with an intrinsic diode. Positive current is current flowing from the anode through the diode to the cathode.

The power through the diode is calculated with $I \cdot \Delta V$ where the voltage drop is calculated as $(V_+ - V_-)$ and positive current flows from V_+ to V_-. This formula may differ from other simulators, such as HSpice.

Diode Operating Temperature

Model parameters can be assigned unique measurement temperatures using the $\mathbf{TNOM}$ model parameter.

Diode level selection

Three distinct implementations of the diode are available. These are selected by using the `LEVEL` model parameter. The default implementation is based on SPICE 3F5, and may be explicitly specified using `LEVEL=1` in the model parameters, but is also selected if no `LEVEL` parameter is specified. The PSpice implementation [2] is obtained by specifying `LEVEL=2`. The **Xyce** `LEVEL=200` diode is the JUNCAP200 model.

The **Xyce** `LEVEL=1` and `LEVEL=2` diodes have a parameter, $\mathbf{IRF}$, that allows the user to adjust the reverse current from the basic SPICE implementation. The usual SPICE treatment defines the linear portion of the reverse current in terms of IS which is defined by the forward current characteristics. Data shows that often the reverse current is quite far off when determined in this

manner. The parameter $\mathbf{IRF}$ is a multiplier that can be applied to adjust the linear portion of the reverse current.

Level 1 and 2 Diode Instance Parameters

Table 2.34: Diode Device Instance Parameters

Parameter	Description	Units	Default
AREA	Area scaling value (scales IS, ISR, IKF, RS, CJ0, and IBV)	–	1
IC		–	0
LAMBERTW	Option to solve diode equations with the Lambert-W function	logical (T/F)	0
OFF	Initial voltage drop across device set to zero	logical (T/F)	0
TEMP	Device temperature	–	Ambient Tempera-ture

Level 1 and 2 Diode Model Parameters

Table 2.35: Diode Device Model Parameters

Parameter	Description	Units	Default
AF	Flicker noise exponent	–	1
BV	Reverse breakdown ”knee” voltage	V	1e+99
CJ	Zero-bias p-n depletion capacitance	F	0
CJO	Zero-bias p-n depletion capacitance	F	0
CJO	Zero-bias p-n depletion capacitance	F	0
EG	Bandgap voltage (barrier height)	eV	1.11
FC	Forward-bias depletion capacitance coefficient	–	0.5
IBV	Reverse breakdown ”knee” current	A	0.001
IBVL	Low-level reverse breakdown ”knee” current (level 2)	A	0
IKF	High-injection ”knee” current (level 2)	A	0
IRF	Reverse current fitting factor	–	1
IS	Saturation current	A	1e-14
ISR	Recombination current parameter (level 2)	A	0
JS	Saturation current	A	1e-14
KF	Flicker noise coefficient	–	0
M	Grading parameter for p-n junction	–	0.5
N	Emission coefficient	–	1
NBV	Reverse breakdown ideality factor (level 2)	–	1
NBVL	Low-level reverse breakdown ideality factor (level 2)	–	1

Table 2.35: Diode Device Model Parameters

Parameter	Description	Units	Default
NR	Emission coefficient for ISR (level 2)	–	2
RS	Parasitic resistance	Ω	0
TBV1	BV temperature coefficient (linear) (level 2)	$^{\circ}C^{-1}$	0
TBV2	BV temperature coefficient (quadratic) (level 2)	$^{\circ}C^{-2}$	0
TIKF	IKF temperature coefficient (linear) (level 2)	$^{\circ}C^{-1}$	0
TNOM		–	Ambient Tempera-ture
TRS1	RS temperature coefficient (linear) (level 2)	$^{\circ}C^{-1}$	0
TRS2	RS temperature coefficient (quadratic) (level 2)	$^{\circ}C^{-2}$	0
TT	Transit time	s	0
VB	Reverse breakdown ”knee” voltage	V	1e+99
VJ	Potential for p-n junction	V	1
XTI	IS temperature exponent	–	3

The JUNCAP200 model has the instance and model parameters in the tables below. Complete documentation of JUNCAP200 may be found at `http://www.cea.fr/cea-tech/leti/pspsupport/Documents/juncap200p5_summary.pdf`.

JUNCAP200 Instance Parameters

Table 2.36: JUNCAP200 Diode Device Instance Parameters

Parameter	Description	Units	Default
AB	Junction area	m^2	1e-12
LG	Gate-edge part of junction perimeter	m^2	1e-06
LS	STI-edge part of junction perimeter	m^2	1e-06
M	Alias for MULT	—	1
MULT	Number of devices in parallel	—	1

JUNCAP200 Model Parameters

Table 2.37: JUNCAP200 Diode Device Model Parameters

Parameter	Description	Units	Default
CBBTBOT	Band-to-band tunneling prefactor of bottom component	A/V^3	1e-12
CBBTGAT	Band-to-band tunneling prefactor of gate-edge component	Am/V^3	1e-18

Table 2.37: JUNCAP200 Diode Device Model Parameters

Parameter	Description	Units	Default
CBBTSTI	Band-to-band tunneling prefactor of STI-edge component	Am/V^3	1e-18
CJORBOT	Zero-bias capacitance per unit-of-area of bottom component	F/m^2	0.001
CJORGAT	Zero-bias capacitance per unit-of-length of gate-edge component	F/m	1e-09
CJORSTI	Zero-bias capacitance per unit-of-length of STI-edge component	F/m	1e-09
CSRHBOT	Shockley-Read-Hall prefactor of bottom component	A/m^3	100
CSRHGAT	Shockley-Read-Hall prefactor of gate-edge component	A/m^2	0.0001
CSRHSTI	Shockley-Read-Hall prefactor of STI-edge component	A/m^2	0.0001
CTATBOT	Trap-assisted tunneling prefactor of bottom component	A/m^3	100
CTATGAT	Trap-assisted tunneling prefactor of gate-edge component	A/m^2	0.0001
CTATSTI	Trap-assisted tunneling prefactor of STI-edge component	A/m^2	0.0001
DTA	Temperature offset with respect to ambient temperature	K	0
FBBTRBOT	Normalization field at the reference temperature for band-to-band tunneling of bottom component	Vm^{-1}	1e+09
FBBTRGAT	Normalization field at the reference temperature for band-to-band tunneling of gate-edge component	Vm^{-1}	1e+09
FBBTRSTI	Normalization field at the reference temperature for band-to-band tunneling of STI-edge component	Vm^{-1}	1e+09
FJUNQ	Fraction below which junction capacitance components are considered negligible	—	0.03
FREV	Coefficient for reverse breakdown current limitation	—	1000
IDSATRBOT	Saturation current density at the reference temperature of bottom component	A/m^2	1e-12
IDSATRGAT	Saturation current density at the reference temperature of gate-edge component	A/m	1e-18
IDSATRSTI	Saturation current density at the reference temperature of STI-edge component	A/m	1e-18
IMAX	Maximum current up to which forward current behaves exponentially	A	1000

Table 2.37: JUNCAP200 Diode Device Model Parameters

Parameter	Description	Units	Default
LEVEL	Model level must be 200	—	200
MEFFTATBOT	Effective mass (in units of m0) for trap-assisted tunneling of bottom component	—	0.25
MEFFTATGAT	Effective mass (in units of m0) for trap-assisted tunneling of gate-edge component	—	0.25
MEFFTATSTI	Effective mass (in units of m0) for trap-assisted tunneling of STI-edge component	—	0.25
PBOT	Grading coefficient of bottom component	—	0.5
PBRBOT	Breakdown onset tuning parameter of bottom component	V	4
PBRGAT	Breakdown onset tuning parameter of gate-edge component	V	4
PBRSTI	Breakdown onset tuning parameter of STI-edge component	V	4
PGAT	Grading coefficient of gate-edge component	—	0.5
PHIGBOT	Zero-temperature bandgap voltage of bottom component	V	1.16
PHIGGAT	Zero-temperature bandgap voltage of gate-edge component	V	1.16
PHIGSTI	Zero-temperature bandgap voltage of STI-edge component	V	1.16
PSTI	Grading coefficient of STI-edge component	—	0.5
STFBBTBOT	Temperature scaling parameter for band-to-band tunneling of bottom component	1/K	-0.001
STFBBTGAT	Temperature scaling parameter for band-to-band tunneling of gate-edge component	1/K	-0.001
STFBBTSTI	Temperature scaling parameter for band-to-band tunneling of STI-edge component	1/K	-0.001
SWJUNEXP	Flag for JUNCAP-express; 0=full model, 1=express model	—	0
TRJ	Reference temperature	°C	21
TYPE	Type parameter, in output value 1 reflects n-type, -1 reflects p-type	—	1
VBIRBOT	Built-in voltage at the reference temperature of bottom component	V	1
VBIRGAT	Built-in voltage at the reference temperature of gate-edge component	V	1
VBIRSTI	Built-in voltage at the reference temperature of STI-edge component	V	1
VBRBOT	Breakdown voltage of bottom component	V	10

Table 2.37: JUNCAP200 Diode Device Model Parameters

Parameter	Description	Units	Default
VBRGAT	Breakdown voltage of gate-edge component	V	10
VBRSTI	Breakdown voltage of STI-edge component	V	10
VJUNREF	Typical maximum junction voltage; usually about 2*VSUP	V	2.5
XJUNGAT	Junction depth of gate-edge component	m	1e-07
XJUNSTI	Junction depth of STI-edge component	m	1e-07

Level 1 Diode Equations

The equations in this section use the following variables:

$$
\begin{aligned}
V_{di} &= \text{voltage across the intrinsic diode only} \\
V_{th} &= k \cdot T/q \text{ (thermal voltage)} \\
k &= \text{Boltzmann's constant} \\
q &= \text{electron charge} \\
T &= \text{analysis temperature (Kelvin)} \\
T_0 &= \text{nominal temperature (set using } \mathbf{TNOM} \text{ option)} \\
\omega &= \text{Frequency (Hz)}
\end{aligned}
$$

Other variables are listed above in the diode model parameters.

Level=1

The level 1 diode is based on the Spice3f5 level 1 model.

DC Current (Level=1)

The intrinsic diode current consists of forward and reverse bias regions where

$$
I_D = \begin{cases} \mathbf{IS} \cdot \left[\exp\left(\frac{V_{di}}{\mathbf{N}V_{th}}\right) - 1\right], & V_{di} > -3.0 \cdot \mathbf{N}V_{th} \\ -\mathbf{IS} \cdot \mathbf{IRF} \cdot \left[1.0 + \left(\frac{3.0 \cdot \mathbf{N}V_{th}}{V_{di} \cdot e}\right)^3\right], & V_{di} < -3.0 \cdot \mathbf{N}V_{th} \end{cases}
$$

$\mathbf{IRF}$ is a **Xyce**-specific parameter that can be used to scale the reverse-biased current to match measured data. It defaults to 1.0, which reduces the model to strict SPICE3F5 compatibility.

When $\mathbf{BV}$ and an optional parameter $\mathbf{IBV}$ are explicitly given in the model statement, an exponential model is used to model reverse breakdown (with a "knee" current of $\mathbf{IBV}$ at a "knee-on"

voltage of $\mathbf{BV}$). The equation for I_D implemented by **Xyce** is given by

$$I_D = -\mathbf{IBV_{eff}} \cdot \exp\left(-\frac{\mathbf{BV_{eff}} + V_{di}}{\mathbf{N}V_{th}}\right), \qquad V_{di} \leq \mathbf{BV_{eff}},$$

where $\mathbf{BV_{eff}}$ and $\mathbf{IBV_{eff}}$ are chosen to satisfy the following constraints:

1. Continuity of I_D between reverse bias and reverse breakdown regions (i.e., continuity of I_D at $V_{di} = -\mathbf{BV_{eff}}$):

$$\mathbf{IBV_{eff}} = \mathbf{IRF} \cdot \mathbf{IS}\left(1 - \left(\frac{3.0 \cdot \mathbf{N}V_{th}}{e \cdot \mathbf{BV_{eff}}}\right)^3\right)$$

2. "Knee-on" voltage/current matching:

$$\mathbf{IBV_{eff}} \cdot \exp\left(-\frac{\mathbf{BV_{eff}} - \mathbf{BV}}{\mathbf{N}V_{th}}\right) = \mathbf{IBV}$$

Substituting the first expression into the second yields a single constraint on $\mathbf{BV_{eff}}$ which cannot be solved for directly. By performing some basic algebraic manipulation and rearranging terms, the problem of finding $\mathbf{BV_{eff}}$ which satisfies the above two constraints can be cast as finding the (unique) solution of the equation

$$\mathbf{BV_{eff}} = f(\mathbf{BV_{eff}}), \tag{2.20}$$

where $f(\cdot)$ is the function that is obtained by solving for the $\mathbf{BV_{eff}}$ term which appears in the exponential in terms of $\mathbf{BV_{eff}}$ and the other parameters. **Xyce** solves Eqn. 2.20 by performing the so-called *Picard Iteration* procedure [6], i.e. by producing successive estimates of $\mathbf{BV_{eff}}$ (which we will denote as $\mathbf{BV_{eff}}^k$) according to

$$\mathbf{BV_{eff}}^{k+1} = f(\mathbf{BV_{eff}}^k)$$

starting with an initial guess of $\mathbf{BV_{eff}}^0 = \mathbf{BV}$. The current iteration procedure implemented in **Xyce** can be shown to guarantee at least six significant digits of accuracy between the numerical estimate of $\mathbf{BV_{eff}}$ and the true value.

In addition to the above, **Xyce** also requires that $\mathbf{BV_{eff}}$ lie in the range $\mathbf{BV} \geq \mathbf{BV_{eff}} \geq 3.0\mathbf{N}V_{th}$. In terms of $\mathbf{IBV}$, this is equivalent to enforcing the following two constraints:

$$\mathbf{IRF} \cdot \mathbf{IS}\left(1 - \left(\frac{3.0 \cdot \mathbf{N}V_{th}}{e \cdot \mathbf{BV}}\right)^3\right) \leq \mathbf{IBV} \tag{2.21}$$

$$\mathbf{IRF} \cdot \mathbf{IS}\left(1 - e^{-3}\right)\exp\left(\frac{-3.0 \cdot \mathbf{N}V_{th} + \mathbf{BV}}{\mathbf{N}V_{th}}\right) \geq \mathbf{IBV} \tag{2.22}$$

Xyce first checks the value of $\mathbf{IBV}$ to ensure that the above two constraints are satisfied. If Eqn. 2.21 is violated, **Xyce** sets $\mathbf{IBV_{eff}}$ to be equal to the left-hand side of Eqn. 2.21 and, correspondingly, sets $\mathbf{BV_{eff}}$ to $-3.0 \cdot \mathbf{N}V_{th}$. If Eqn. 2.22 is violated, **Xyce** sets $\mathbf{IBV_{eff}}$ to be equal to the left-hand side of Eqn. 2.22 and, correspondingly, sets $\mathbf{BV_{eff}}$ to $\mathbf{BV}$.

Capacitance (Level=1)

The p-n diode capacitance consists of a depletion layer capacitance C_d and a diffusion capacitance C_{dif}. The first is given by

$$C_d = \begin{cases} \mathbf{CJ} \cdot \mathbf{AREA} \left(1 - \frac{V_{di}}{\mathbf{VJ}}\right)^{-\mathbf{M}}, & V_{di} \leq \mathbf{FC} \cdot \mathbf{VJ} \\ \frac{\mathbf{CJ} \cdot \mathbf{AREA}}{\mathbf{F2}} \left(\mathbf{F3} + \mathbf{M}\frac{V_{di}}{\mathbf{VJ}}\right), & V_{di} > \mathbf{FC} \cdot \mathbf{VJ} \end{cases}$$

The diffusion capacitance (sometimes referred to as the transit time capacitance) is

$$C_{dif} = \mathbf{TT}G_d = \mathbf{TT}\frac{dI_D}{dV_{di}}$$

where G_d is the junction conductance.

Temperature Effects (Level=1)

The diode model contains explicit temperature dependencies in the ideal diode current, the generation/recombination current and the breakdown current. Further temperature dependencies are present in the diode model via the saturation current I_S, the depletion layer junction capacitance CJ, the junction potential V_J.

$$\begin{aligned}
V_t(T) &= \frac{kT}{q} \\
V_{tnom}(T) &= \frac{k\mathbf{TNOM}}{q} \\
E_g(T) &= E_{g0} - \frac{\alpha T^2}{\beta + T} \\
E_{gNOM}(T) &= E_{g0} - \frac{\alpha \mathbf{TNOM}^2}{\mathbf{TNOM} + \beta} \\
arg1(T) &= -\frac{E_g(T)}{2kT} + \frac{E_{g300}}{2kT_0} \\
arg2(T) &= -\frac{E_{gNOM}(T)}{2k\mathbf{TNOM}} + \frac{E_{g300}}{2kT_0} \\
pbfact1(T) &= -2.0 \cdot V_t(T) \left(1.5 \cdot \ln\left(\frac{T}{T_0}\right) + q \cdot arg1(T)\right) \\
pbfact2(T) &= -2.0 \cdot V_{tnom}(T) \left(1.5 \cdot \ln\left(\frac{\mathbf{TNOM}}{T_0}\right) + q \cdot arg2(T)\right) \\
pbo(T) &= (\mathbf{VJ} - pbfact2(T)) \frac{T_0}{\mathbf{TNOM}}
\end{aligned}$$

$$
\begin{aligned}
V_J(T) &= pbfact1(T) + \frac{T}{T_0} pbo(T) \\
gma_{old}(T) &= \frac{\mathbf{VJ} - pbo(T)}{pbo(T)} \\
gma_{new}(T) &= \frac{V_J(T) - pbo(T)}{pbo(T)} \\
CJ(T) &= \mathbf{CJ0} \frac{1.0 + \mathbf{M}\left(4.0 \times 10^{-4}\left(T - T_0\right) - gma_{new}(T)\right)}{1.0 + \mathbf{M}\left(4.0 \times 10^{-4}\left(\mathbf{TNOM} - T_0\right) - gma_{old}(T)\right)} \\
I_S(T) &= \mathbf{IS} \cdot \exp\left(\left(\frac{T}{\mathbf{TNOM}} - 1.0\right) \cdot \frac{\mathbf{EG}}{\mathbf{N} V_t(T)} + \frac{\mathbf{XTI}}{\mathbf{N}} \cdot \ln\left(\frac{T}{\mathbf{TNOM}}\right)\right)
\end{aligned}
$$

where, for silicon, $\alpha = 7.02 \times 10^{-4}\ eV/K$, $\beta = 1108\ K$ and $E_{g0} = 1.16\ eV$.

For a more thorough description of p-n junction physics, see [9]. For a thorough description of the U.C. Berkeley SPICE models see Reference [11].

2.3.9 Independent Current Source

Symbol

Instance Form

```
I<name> <(+) node> <(-) node> [ [DC] <value> ]
+ [AC [magnitude value [phase value] ] ] [transient specification]
```

Examples

```
ISLOW 1 22 SIN(0.5 1.0ma 1KHz 1ms)
IPULSE 1 3 PULSE(-1 1 2ns 2ns 2ns 50ns 100ns)
```

Parameters and Options

`transient specification`

There are five predefined time-varying functions for sources:

`PULSE <parameters>` Pulse waveform

`SIN <parameters>` Sinusoidal waveform

`EXP <parameters>` Exponential waveform

`PWL <parameters>` Piecewise linear waveform

`SFFM <parameters>` Frequency-modulated waveform

Comments

Positive current flows from the positive node through the source to the negative node.

The power supplied or dissipated by the current source is calculated with $I \cdot \Delta V$ where the voltage drop is calculated as $(V_+ - V_-)$ and positive current flows from V_+ to V_-. Dissipated power has a positive sign, while supplied power has a negative sign.

The default value is zero for the DC, AC, and transient values. None, any, or all of the DC, AC, and transient values can be specified. The AC phase value is in degrees.

Transient Specifications

This section outlines the available transient specifications. Δt and T_F are the time step size and simulation end-time, respectively.

Pulse

```
PULSE(I1 I2 TD TR TF PW PER)
```

Table 2.38: Pulse Parameters

Parameter	Description	Units	Default
I1	Initial Value	amp	–
I2	Pulse Value	amp	–
TD	Delay Time	s	0.0
TR	Rise Time	s	Δt
TF	Fall Time	s	Δt
PW	Pulse Width	s	T_F
PER	Period	s	T_F

Sine

```
SIN(IO IA FREQ TD THETA PHASE)
```

Table 2.39: Sine Parameters

Parameter	Description	Units	Default
IO	Offset	amp	–
IA	Amplitude	amp	–
FREQ	Frequency	s^{-1}	0.0
TD	Delay	s	Δt
THETA	Attenuation Factor	s	Δt
PHASE	Phase	degrees	0.0

The waveform is shaped according to the following equations, where $\phi = \pi * \mathbf{PHASE}/180$:

$$I = \begin{cases} I_0, & 0 < t < T_D \\ I_0 + I_A \sin[2\pi \cdot \mathbf{FREQ} \cdot (t - T_D) + \phi] \exp[-(t - T_D) \cdot \mathbf{THETA}], & T_D < t < T_F \end{cases}$$

Exponent

```
EXP(I1 I2 TD1 TAU1 TD2 TAU2)
```

Table 2.40: Exponent Parameters

Parameter	Description	Units	Default
I1	Initial Amplitude	amp	N/A
I2	Amplitude	amp	N/A
TD1	Rise Delay Time	s	0.0

Table 2.40: Exponent Parameters

Parameter	Description	Units	Default
TAU1	Rise Time Constant	s	Δt
TD2	Delay Fall Time	s	TD1 $+\Delta t$
TAU2	Fall Time Constant	s	Δt

The waveform is shaped according to the following equations:

$$I = \begin{cases} I_1, & 0 < t < \mathrm{TD1} \\ I_1 + (I_2 - I_1)\{1 - \exp[-(t - \mathrm{TD1})/\mathrm{TAU1}]\}, & \mathrm{TD1} < t < \mathrm{TD2} \\ I_1 + (I_2 - I_1)\{1 - \exp[-(t - \mathrm{TD1})/\mathrm{TAU1}]\} & \\ \quad +(I_1 - I_2)\{1 - \exp[-(t - \mathrm{TD2})/\mathrm{TAU2}]\}, & \mathrm{TD2} < t < T_2 \end{cases}$$

Piecewise Linear

```
PWL  T0 I0 [Tn In]*
PWL  FILE "<name>" [TD=<timeDelay>] [R=<repeatTime>]
```

Table 2.41: Piecewise Linear Parameters

Parameter	Description	Units	Default
T_n	Time at Corner	s	none
I_n	Current at Corner	amp	none
TD	Time Delay	s	0
R	Repeat Time	s	none

When the FILE option is given, **Xyce** will read the corner points from the file specified in the `<name>` field. This file should be a plain ASCII text file (or a .CSV file) with the time/current pairs. There should be one pair per line, and the time and current values should be separated by whitespace or commas. As an example, the file specified (e.g., `ipwl.csv`) could have these five lines:

```
0.00, 0.00
2.00, 3.00
3.00, 2.00
4.00, 2.00
4.01, 5.00
```

The corresponding example instance lines would be:

```
IPWL1 1 0 PWL 0S 0A  2S 3A  3S 2A  4S 2A  4.01S 5A
IPWL2 2 0 PWL FILE "ipwl.txt"
```

```
IPWL3 3 0 PWL file "ipwl.csv"
IPWL4 4 0 PWL FILE ipwl.csv
```

The double quotes around the file name are optional, as shown above.

It is a best practice to specify all of the time-voltage pairs in the PWL specification. However, for compatibility with HSpice and PSpice, if the user-specified list of time/voltage pairs omits the pair at time=0 as the first pair in the list then **Xyce** will insert a pair at time=0 with the voltage value at the first user-specified time value. As an example, this user-specified list:

```
2S 3V  3S 2V  4S 2V  4.01S 5V
```

would be implemented in **Xyce** as follows:

```
0S 3V  2S 3V  3S 2V  4S 2V  4.01S 5V
```

TD has units of seconds, and specifies the length of time to delay the start of PWL waveform. The default is to have no delay, and TD is an optional parameter.

The Repeat Time (R) is an optional parameter. If R is omitted then the waveform will not repeat. If R is included then the waveform will repeat until the end of the simulation. As examples, R=0 means repeat the PWL waveform from time=0 to the last time (T_N) specified in the waveform specification. (This would use the time points 0s, 2s, 3s, 4s and 4.01s for the example waveform given above.). In general, R=`<repeatTime>` means repeat the waveform from time equal to `<repeatTime>` seconds in the waveform specification to the last time (T_N) specified in the waveform specification. So, the `<repeatTime>` must be greater than or equal to 0 and less than the last time point (T_N). If the R parameter is used then it must have a value.

The specification `PWL FILE "<name>" R` is illegal in **Xyce** as a shorthand for R=0. Also, the **Xyce** syntax for PWL sources is not compatible with the PSpice `REPEAT` syntax for PWL sources. See section 6.1.11 for more details.

The repeat time (R) does enable the specification of discontinuous piecewise linear waveforms. For example, this waveform is a legal **Xyce** syntax.

```
IPWL1 1 0 PWL 0S 0V  2S 3V  3S 2V  4S 2V  4.01V 5V  R=2
```

However, in general, discontinuous source waveforms may cause convergence problems.

Frequency Modulated

```
SFFM (IOFF IAMPL FC MOD FM)
```

Table 2.42: Frequency Modulated Parameters

Parameter	Description	Units	Default
`IOFF`	Offset Current	amp	none
`IAMPL`	Peak Current Amplitude	amp	none
`FC`	Carrier Frequency	hertz	1/**TSTOP**
`MOD`	Modulation Index	-	0
`FM`	Modulation Frequency	hertz	1/**TSTOP**

TSTOP is the final time, as entered into the transient (`.TRANS`) command. The waveform is shaped according to the following equation:

$$I = \mathbf{ioff} + \mathbf{iampl} \cdot \sin(2\pi \cdot \mathbf{fc} \cdot \mathbf{TIME} + \mathrm{mod} \cdot \sin(2\pi \cdot \mathbf{fm} \cdot \mathbf{TIME}))$$

where **TIME** is the current simulation time.

2.3.10 Independent Voltage Source

Symbol

Instance Form

```
V<name> <(+) node> <(-) node> [ [DC] <value> ]
+ [AC [magnitude value [phase value] ] ] [transient specification]
```

Examples

```
VSLOW 1 22 SIN(0.5 1.0mV 1KHz 1ms)
VPULSE 1 3 PULSE(-1 1 2ns 2ns 2ns 50ns 100ns)
```

Parameters and Options

`transient specification`

There are five predefined time-varying functions for sources:

`PULSE <parameters>` Pulse waveform

`SIN <parameters>` Sinusoidal waveform

`EXP <parameters>` Exponential waveform

`PWL <parameters>` Piecewise linear waveform

`SFFM <parameters>` Frequency-modulated waveform

Comments

Positive current flows from the positive node through the source to the negative node.

The power supplied or dissipated by the voltage source is calculated with $I \cdot \Delta V$ where the voltage drop is calculated as $(V_+ - V_-)$ and positive current flows from V_+ to V_-. Dissipated power has a positive sign, while supplied power has a negative sign.

None, any, or all of the DC, AC, and transient values can be specified. The AC phase value is in degrees.

Transient Specifications

This section outlines the available transient specifications. Δt and T_F are the time step size and simulation end-time, respectively.

Pulse

```
PULSE(V1 V22 TD TR TF PW PER)
```

Table 2.43: Pulse Parameters

Parameter	Description	Units	Default
V1	Initial Value	Volt	–
V2	Pulse Value	Volt	–
TD	Delay Time	s	0.0
TR	Rise Time	s	Δt
TF	Fall Time	s	Δt
PW	Pulse Width	s	T_F
PER	Period	s	T_F

Sine

```
SIN(VO VA FREQ TD THETA PHASE)
```

Table 2.44: Sine Parameters

Parameter	Description	Units	Default
VO	Offset	Volt	–
VA	Amplitude	Volt	–
FREQ	Frequency	s^{-1}	0.0
TD	Delay	s	Δt
THETA	Attenuation Factor	s	Δt
PHASE	Phase	degrees	0.0

The waveform is shaped according to the following equations, where $\phi = \pi * \mathbf{PHASE}/180$:

$$V = \begin{cases} V_0, & 0 < t < T_D \\ V_0 + V_A \sin[2\pi \cdot \mathbf{FREQ} \cdot (t - T_D) + \phi] \exp[-(t - T_D) \cdot \mathbf{THETA}], & T_D < t < T_F \end{cases}$$

Exponent

```
EXP(V1 V2 TD1 TAU1 TD2 TAU2)
```

Table 2.45: Exponent Parameters

Parameter	Description	Units	Default
V1	Initial Amplitude	Volt	N/A
V2	Amplitude	Volt	N/A
TD1	Rise Delay Time	s	0.0

Table 2.45: Exponent Parameters

Parameter	Description	Units	Default
TAU1	Rise Time Constant	s	Δt
TD2	Delay Fall Time	s	TD1 $+\Delta t$
TAU2	Fall Time Constant	s	Δt

The waveform is shaped according to the following equations:

$$V = \begin{cases} V_1, & 0 < t < \mathrm{TD1} \\ V_1 + (V_2 - V_1)\{1 - \exp[-(t - \mathrm{TD1})/\mathrm{TAU1}]\}, & \mathrm{TD1} < t < \mathrm{TD2} \\ V_1 + (V_2 - V_1)\{1 - \exp[-(t - \mathrm{TD1})/\mathrm{TAU1}]\} & \\ \quad +(V_1 - V_2)\{1 - \exp[-(t - \mathrm{TD2})/\mathrm{TAU2}]\}, & \mathrm{TD2} < t < T_2 \end{cases}$$

Piecewise Linear

```
PWL  T0 V0 [Tn Vn]*
PWL  FILE "<name>" [TD=<timeDelay>] [R=<repeatTime>]
```

Table 2.46: Piecewise Linear Parameters

Parameter	Description	Units	Default
T_n	Time at Corner	s	none
V_n	Voltage at Corner	Volt	none
TD	Time Delay	s	0
R	Repeat Time	s	none

When the FILE option is given, **Xyce** will read the corner points from the file specified in the `<name>` field. This file should be a plain ASCII text file (or a .CSV file) with time/voltage pairs. There should be one pair per line, and the time and voltage values should be separated by whitespace or commas. As an example, the file specified (e.g., `vpwl.csv`) could have these five lines:

```
0.00, 0.00
2.00, 3.00
3.00, 2.00
4.00, 2.00
4.01, 5.00
```

The corresponding example instance lines would be:

```
VPWL1 1 0 PWL 0S 0V  2S 3V  3S 2V  4S 2V  4.01S 5V
VPWL2 2 0 PWL FILE "vpwl.txt"
```

```
VPWL3 3 0 PWL file "vpwl.csv"
VPWL4 4 0 PWL FILE vpwl.csv
```

The double quotes around the file name are optional, as shown above.

It is a best practice to specify all of the time-voltage pairs in the PWL specification. However, for compatibility with HSpice and PSpice, if the user-specified list of time/voltage pairs omits the pair at time=0 as the first pair in the list then **Xyce** will insert a pair at time=0 with the voltage value at the first user-specified time value. As an example, this user-specified list:

```
2S 3V  3S 2V  4S 2V  4.01S 5V
```

would be implemented in **Xyce** as follows:

```
0S 3V  2S 3V  3S 2V  4S 2V  4.01S 5V
```

TD has units of seconds, and specifies the length of time to delay the start of PWL waveform. The default is to have no delay, and TD is an optional parameter.

The Repeat Time (R) is an optional parameter. If R is omitted then the waveform will not repeat. If R is included then the waveform will repeat until the end of the simulation. As examples, R=0 means repeat the PWL waveform from time=0 to the last time (T_N) specified in the waveform specification. (This would use the time points 0s, 2s, 3s, 4s and 4.01s for the example waveform given above.) In general, R=`<repeatTime>` means repeat the waveform from time equal to `<repeatTime>` seconds in the waveform specification to the last time (T_N) specified in the waveform specification. So, the `<repeatTime>` must be greater than or equal to 0 and less than the last time point (T_N). If the R parameter is used then it must have a value.

The specification `PWL FILE "<name>" R` is illegal in **Xyce** as a shorthand for R=0. Also, the **Xyce** syntax for PWL sources is not compatible with the PSpice `REPEAT` syntax for PWL sources. See section 6.1.11 for more details.

The repeat time (R) does enable the specification of discontinuous piecewise linear waveforms. For example, this waveform is a legal **Xyce** syntax.

```
VPWL1 1 0 PWL 0S 0V  2S 3V  3S 2V  4S 2V  4.01V 5V  R=2
```

However, in general, discontinuous source waveforms may cause convergence problems.

Frequency Modulated

```
SFFM (VOFF VAMPL FC MOD FM)
```

Table 2.47: Frequency Modulated Parameters

Parameter	Description	Units	Default
`VOFF`	Offset Current	Volt	none
`VAMPL`	Peak Current Amplitude	Volt	none
`FC`	Carrier Frequency	hertz	1/**TSTOP**
`MOD`	Modulation Index	-	0
`FM`	Modulation Frequency	hertz	1/**TSTOP**

TSTOP is the final time, as entered into the transient (`.TRANS`) command. The waveform is shaped according to the following equation:

$$V = \mathbf{voff} + \mathbf{vampl} \cdot \sin(2\pi \cdot \mathbf{fc} \cdot \mathbf{TIME} + \mathrm{mod} \cdot \sin(2\pi \cdot \mathbf{fm} \cdot \mathbf{TIME}))$$

where **TIME** is the current simulation time.

2.3.11 Voltage Controlled Voltage Source

Symbol

Instance Form

```
E<name> <(+) node> <(-) node> <(+) controlling node>
+ <(-) controlling node> <gain>
E<name> <(+) node> <(-) node> VALUE =  <expression>
E<name> <(+) node> <(-) node> TABLE  <expression>  =
+ < <input value>,<output value> >*
E<name> <(+) node> <(-) node> POLY(<value>)
+ [<+ control node> <- control node>]*
+ [<polynomial coefficient value>]*
```

Examples

```
EBUFFER 1 2 10 11 5.0
ESQROOT   5   0 VALUE = 5V*SQRT(V(3,2))
ET2 2 0 TABLE V(ANODE,CATHODE) = (0,0) (30,1)
EP1 5 1 POLY(2) 3 0 4 0 0 .5 .5
```

Parameters and Options

`(+) node`
`(-) node`
: Output nodes. Positive current flows from the `(+)` node through the source to the `(-)` node.

`(+) controlling node`
`(-) controlling node`
: Node pairs that define a set of controlling voltages. A given node may appear multiple times and the output and controlling nodes may be the same.

Comments

In the first form, a specified voltage drop between controlling nodes is multiplied by the gain to determine the voltage drop across the output nodes.

The second through fourth forms allow nonlinear controlled sources using the `VALUE`, `TABLE`, or `POLY` keywords, respectively, and are used in analog behavioral modeling. They are provided primarily for netlist compatibility with other simulators. These three forms are automatically converted within **Xyce** to its principal ABM device, the `B` nonlinear dependent source device. See the B-source section (2.3.15) and the **Xyce** User's Guide for more guidance on analog behavioral modeling. For details concerning the use of the `POLY` format, see section 2.2.5.

The power supplied or dissipated by this source device is calculated with $I \cdot \Delta V$ where the voltage drop is calculated as $(V_+ - V_-)$ and positive current flows

from V_+ to V_-. Dissipated power has a positive sign, while supplied power has a negative sign.

2.3.12 Current Controlled Current Source

Symbol

Instance Form

```
F<name> <(+) node> <(-) node>
+ <controlling V device name> <gain>
F<name> <(+) node> <(-) node> POLY(<value>)
+ <controlling V device name>*
+ < <polynomial coefficient value> >*
```

Examples

```
FSENSE 1 2 VSENSE 10.0
FAMP 13 0 POLY(1) VIN 0 500
FNONLIN 100 101 POLY(2) VCNTRL1 VCINTRL2 0.0 13.6 0.2 0.005
```

Parameters and Options

`(+) node`
`(-) node`
: Output nodes. Positive current flows from the `(+)` node through the source to the `(-)` node.

`controlling V device`
: The controlling voltage source which must be an independent voltage source (V device).

Comments

In the first form, a specified current through a controlling device is multiplied by the gain to determine this device's output current.

The second form using the `POLY` keyword is used in analog behavioral modeling. This form is automatically converted within **Xyce** to its principal ABM device, the `B` nonlinear dependent source device. See the B-source section (2.3.15) and the **Xyce** User's Guide for more guidance on analog behavioral modeling. For details concerning the use of the `POLY` format, see section 2.2.5.

The power supplied or dissipated by this source device is calculated with $I \cdot \Delta V$ where the voltage drop is calculated as $(V_+ - V_-)$ and positive current flows from V_+ to V_-. Dissipated power has a positive sign, while supplied power has a negative sign.

2.3.13 Voltage Controlled Current Source

Symbol

Instance Form

```
G<name> <(+) node> <(-) node> <(+) controlling node>
+ <(-) controlling node> <transconductance>
G<name> <(+) <node> <(-) node> VALUE =  <expression>
G<name> <(+) <node> <(-) node> TABLE  <expression>  =
+ < <input value>,<output value> >*
G<name> <(+) <node> <(-) node> POLY(<value>)
+ [<+ controlling node> <- controlling node>]*
+ [<polynomial coefficient>]*
```

Examples

```
GBUFFER 1 2 10 11 5.0
GPSK 11 6 VALUE = 5MA*SIN(6.28*10kHz*TIME+V(3))
GA2 2 0 TABLE V(5) = (0,0) (1,5) (10,5) (11,0)
```

Parameters and Options

`(+) node`
`(-) node`
: Output nodes. Positive current flows from the `(+)` node through the source to the `(-)` node.

`(+) controlling node`
`(-) controlling node`
: Node pairs that define a set of controlling voltages. A given node may appear multiple times and the output and controlling nodes may be the same.

Comments

In the first form, the voltage drop between the controlling nodes is multiplied by the transconductance to obtain the current-source output of the `G` device.

The second through fourth forms using the `VALUE`, `TABLE`, and `POLY` keywords, respectively, are used in analog behavioral modeling. They are provided primarily for netlist compatibility with other simulators. These two forms are automatically converted within **Xyce** to its principal ABM device, the B nonlinear dependent source device. See the B-source section (2.3.15) and the **Xyce** User's Guide for more guidance on analog behavioral modeling. For details concerning the use of the `POLY` format, see section 2.2.5.

The power supplied or dissipated by this source device is calculated with $I \cdot \Delta V$ where the voltage drop is calculated as $(V_+ - V_-)$ and positive current flows from V_+ to V_-. Dissipated power has a positive sign, while supplied power has a negative sign.

2.3.14 Current Controlled Voltage Source

The syntax of this device is exactly the same as for a Current Controlled Current Source. For a Current-Controlled Voltage Source just substitute an H for the F. The H device generates a voltage, whereas the F device generates a current.

Symbol

Instance Form

```
H<name> <(+) node> <(-) node>
+ <controlling V device name> <gain>
H<name> <(+) node> <(-) node> POLY(<value>)
+ <controlling V device name>*
+ < <polynomial coefficient value> >*
```

Examples

```
HSENSE 1 2 VSENSE 10.0
HAMP 13 0 POLY(1) VIN 0 500
HNONLIN 100 101 POLY(2) VCNTRL1 VCINTRL2 0.0 13.6 0.2 0.005
```

Comments

In the first form, the current through a specified voltage source controls is multiplied by a constant to obtain the voltage-source output.

The second form using the `POLY` keyword is used in analog behavioral modeling. It is provided primarily for netlist compatibility with other simulators. These two forms are automatically converted within **Xyce** to its principal ABM device, the B nonlinear dependent source device. See the B-source section (2.3.15) and the **Xyce** User's Guide for more guidance on analog behavioral modeling. For details concerning the use of the `POLY` format, see section 2.2.5.

The power supplied or dissipated by this source device is calculated with $I \cdot \Delta V$ where the voltage drop is calculated as $(V_+ - V_-)$ and positive current flows from V_+ to V_-. Dissipated power has a positive sign, while supplied power has a negative sign.

2.3.15 Nonlinear Dependent Source

Instance Form

```
B<name> <(+) node> <(-) node> V=ABM expression
B<name> <(+) node> <(-) node> I=ABM expression
```

Examples

```
B1 2 0 V={sqrt(V(1))}
B2 4 0 V={V(1)*TIME}
B3 4 2 I={I(V1) + V(4,2)/100}
B4 5 0 V={Table V(5)=(0,0) (1.0,2.0) (2.0,3.0) (3.0,10.0)}
```

Comments

The nonlinear dependent source device, also known as the B-source device, is used in analog behavioral modeling (ABM). The `(+)` and `(-)` nodes are the output nodes. Positive current flows from the `(+)` node through the source to the `(-)` node.

The power supplied or dissipated by the nonlinear dependent source is calculated with $I \cdot \Delta V$ where the voltage drop is calculated as $(V_+ - V_-)$ and positive current flows from V_+ to V_-. Dissipated power has a positive sign, while supplied power has a negative sign.

It is important to note that the B-source allows the user to specify expressions that could have infinite-slope transitions, such as the following. (Note: the braces surrounding all expressions are required in this definition.)

```
Bcrtl OUTA 0 V={ IF( (V(IN) > 3.5), 5, 0 ) }
```

This can lead to "timestep too small" errors when **Xyce** reaches the transition point. Infinite-slope transitions in expressions dependent only on the `time` variable are a special case, because **Xyce** can detect that they are going to happen in the future and set a "breakpoint" to capture them. Infinite-slope transitions depending on other solution variables cannot be predicted in advance, and cause the time integrator to scale back the timestep repeatedly in an attempt to capture the feature until the timestep is too small to continue.

See the "Analog Behavioral Modeling" chapter of the **Xyce** User's Guide for guidance on using the B-source device and ABM expressions, and the Expressions Section (2.2) for complete documentation of expressions and expression operators.

2.3.16 Bipolar Junction Transistor (BJT)

Symbol

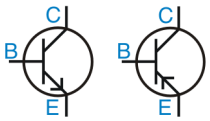

Instance Form

```
Q<name> <collector node> <base node> <emitter node>
 + [substrate node] <model name> [area value]

Q<name> <collector node> <base node> <emitter node>
 + <thermal node> <VBIC 1.2 model name>

Q<name> <collector node> <base node> <emitter node>
 + [thermal node] <VBIC 1.3 3-terminal model name>

Q<name> <collector node> <base node> <emitter node>
 + <substrate> [thermal node] <VBIC 1.3 4-terminal model name>

 Q<name> <collector node> <base node> <emitter node>
 + <substrate> <thermal node> <HICUM model name>
```

Model Form

```
.MODEL <model name> NPN [model parameters]
.MODEL <model name> PNP [model parameters]
```

Examples

```
Q2 10 2 9 PNP1
Q12 14 2 0 1 NPN2 2.0
Q6 VC 4 11 [SUB] LAXPNP
Q6 Coll Base Emit DT VBICMODEL1
Q6 Coll Base Emit DT VBIC13MODEL2
Q6 Coll Base Emit VBIC13MODEL3
Q6 Coll Base Emit Subst DT VBIC13MODEL4
Q6 Coll Base Emit Subst DT HICUMMMODEL1
```

Parameters and Options

`substrate node`

Optional and defaults to ground. Since **Xyce** permits alphanumeric node names and because there is no easy way to make a distinction between these and the model names, the name (not a number) used for the substrate node must be enclosed in square brackets `[ ]`. Otherwise, nodes would be interpreted as model names. See the fourth example above.

`area value`

The relative device area with a default value of 1.

Comments The BJT is modeled as an intrinsic transistor using ohmic resistances in series with the collector (RC/area), with the base (value varies with current, see BJT equations) and with the emitter (RE/area).For model parameters with optional names, such as VAF and VA (the optional name is in parentheses), either may be used.For model types NPN and PNP, the isolation junction capacitance is connected between the intrinsic-collector and substrate nodes. This is the same as in SPICE and works well for vertical IC transistor structures.

The VBIC 1.2 model requires a slightly different form of the instance line than does the level 1 BJT; this variant of the Q line is shown in the fourth example above. VBIC 1.2 instance lines have four required nodes, the first three are the normal collector, base, and emitter, and the fourth node is for electrothermal effects. This fourth node, named "dt" in the VBIC literature, is the difference between the device temperature including self-heating and the baseline temperature of the device. The base temperature of the device is the sum of the ambient temperature of the simulation and the `DTEMP` model parameter. It is common to tie this "dt" node to ground using a large-value resistor and to use the node only for output to observe the device heating, but it can also be used to couple the thermal effects of several VBIC models.

Both the VBIC 1.3 and VBIC 1.2 models are available in Xyce. The VBIC 1.3 model is provided in both 3-terminal (Q level 11) and 4-terminal (Q level 12) variants, both supporting electrothermal and excess-phase effects, and is slightly different in usage than the VBIC 1.2. These variants of the Q line are shown in the fifth through seventh examples above. VBIC 1.3 instance lines have three or four required nodes, depending on model level, and an *optional* "dt" node. The first three are the normal collector, base,and emitter. In the level 12 (4-terminal) the fourth node is the substrate, just as for the level 1 BJT. If the optional "dt" node is specified for either variant, it can be used to view the local temperature rise due to self-heating, and could possibly be used to model coupled heating effects of several VBIC devices.

The HICUM models require both a substrate and thermal node.

BJT Level selection

Xyce supports the level 1 BJT model, which is based on the documented standard SPICE 3F5 BJT model, but was coded independently at Sandia. It is mostly based on the classic Gummel-Poon BJT model [7].

Three variants of the VBIC model are provided as BJT levels 10-12. The level 10 is the 3-terminal, electrothermal, constant phase model of VBIC version 1.2 [8]. Levels 11 and 12 are the 3-terminal and 4-terminal variants of the VBIC 1.3.

An experimental release of the FBH HBT_X model version 2.1[9] is provided as BJT level 23.

Both the HICUM/L0 (level 230) and HICUM/L2 (level 234) models are also provided (`https://www.iee.et.tu-dresden.de/iee/eb/hic_new/hic_start.html`).

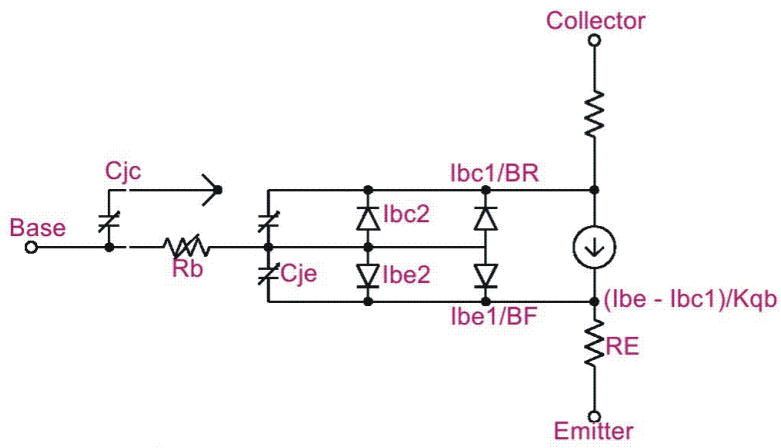

Figure 2.1. BJT model schematic. Adapted from reference [2].

The MEXTRAM[10] BJT model version 504.12.1 model is provided. Two variants of this model are available: the level 504 model without self-heating and without external substrate node, and the level 505 model with self heating but without external substrate node. The level 505 instance line requires a fourth node for the 'dt' node, similar to the usage in all of the VBIC models (levels 10-12), but is otherwise identical to the level 504 model.

BJT Power Calculations

Power dissipated in the transistor is calculated with $|I_B * V_{BE}| + |I_C * V_{CE}|$, where I_B is the base current, I_C is the collector current, V_{BE} is the voltage drop between the base and the emitter and V_{CE} is the voltage drop between the collector and the emitter. This formula may differ from other simulators.

The Level 1 Model

BJT Equations

The Level 1 BJT implementation within **Xyce** is based on [11]. The equations in this section describe an NPN transistor. For the PNP device, reverse the signs of all voltages and currents. The equations use the following variables:

V_{be} = intrinsic base-intrinsic emitter voltage
V_{bc} = intrinsic base-intrinsic collector voltage
V_{bs} = intrinsic base-substrate voltage
V_{bw} = intrinsic base-extrinsic collector voltage (quasi-saturation only)
V_{bx} = extrinsic base-intrinsic collector voltage
V_{ce} = intrinsic collector-intrinsic emitter voltage
V_{js} = (NPN) intrinsic collector-substrate voltage

$$
\begin{aligned}
&= \text{(PNP) intrinsic substrate-collector voltage} \\
V_t &= kT/q \text{ (thermal voltage)} \\
V_{th} &= \text{threshold voltage} \\
k &= \text{Boltzmann's constant} \\
q &= \text{electron charge} \\
T &= \text{analysis temperature (K)} \\
T_0 &= \text{nominal temperature (set using } \mathbf{TNOM} \text{ option)}
\end{aligned}
$$

Other variables are listed above in BJT Model Parameters.

<u>DC Current</u>

The BJT model is based on the Gummel and Poon model [12] where the different terminal currents are written

$$
\begin{aligned}
I_e &= -I_{cc} - I_{be} + I_{re} + (C_{dife} + C_{de})\frac{dV_{be}}{dt} \\
I_c &= -I_{cc} + I_{bc} - I_{rc} - (C_{difc} + C_{dc})\frac{dV_{bc}}{dt} \\
I_b &= I_e - I_c
\end{aligned}
$$

Here, C_{dife} and C_{difc} are the capacitances related to the hole charges per unit area in the base, Q_{dife} and Q_{difc}, affiliated with the electrons introduced across the emitter-base and collector-base junctions, respectively. Also, C_{be} and C_{bc} are the capacitances related to donations to the hole charge of the base, Q_{be} and Q_{bc}, affiliated with the differences in the depletion regions of the emitter-base and collector-base junctions, respectively. The intermediate currents used are defined as

$$
\begin{aligned}
-I_{be} &= \frac{\mathbf{IS}}{\mathbf{BF}}\left[\exp\left(\frac{V_{be}}{\mathbf{NF}V_{th}}\right) - 1\right] \\
-I_{cc} &= \frac{Q_{bo}}{Q_b}\mathbf{IS}\left[\exp\left(\frac{V_{be}}{\mathbf{NF}V_{th}}\right) - \exp\left(\frac{V_{bc}}{\mathbf{NF}V_{th}}\right)\right] \\
-I_{bc} &= \frac{\mathbf{IS}}{\mathbf{BR}}\left[\exp\left(\frac{V_{bc}}{\mathbf{NR}V_{th}}\right) - 1\right] \\
I_{re} &= \mathbf{ISE}\left[\exp\left(\frac{V_{be}}{\mathbf{NE}V_{th}}\right) - 1\right] \\
I_{rc} &= \mathbf{ISC}\left[\exp\left(\frac{V_{bc}}{\mathbf{NC}V_{th}}\right) - 1\right]
\end{aligned}
$$

where the last two terms are the generation/recombination currents related to the emitter and collector junctions, respectively. The charge Q_b is the majority carrier charge in the base at large injection levels and is a key difference in the Gummel-Poon model over the earlier Ebers-Moll model. The ratio Q_b/Q_{bo} (where Q_{bo} represents the zero-bias base charge, i.e. the value of Q_b

when $V_{be} = V_{bc} = 0$) as computed by **Xyce** is given by

$$\frac{Q_b}{Q_{bo}} = \frac{q_1}{2}\left(1 + \sqrt{1 + 4q_2}\right)$$

where

$$\begin{aligned} q_1 &= \left(1 - \frac{V_{be}}{\mathbf{VAR}} - \frac{V_{bc}}{\mathbf{VAF}}\right)^{-1} \\ q_2 &= \frac{\mathbf{IS}}{\mathbf{IKF}}\left[\exp\left(\frac{V_{be}}{\mathbf{NF}V_{th}}\right) - 1\right] + \frac{\mathbf{IS}}{\mathbf{IKR}}\left[\exp\left(\frac{V_{bc}}{\mathbf{NR}V_{th}}\right) - 1\right] \end{aligned}$$

Capacitance Terms

The capacitances listed in the above DC $I - V$ equations each consist of a depletion layer capacitance C_d and a diffusion capacitance C_{dif}. The first is given by

$$C_d = \begin{cases} \mathbf{CJ}\left(1 - \frac{V_{di}}{\mathbf{VJ}}\right)^{-\mathbf{M}} & V_{di} \leq \mathbf{FC} \cdot \mathbf{VJ} \\ \mathbf{CJ}\left(1 - \mathbf{FC}\right)^{-(1+\mathbf{M})}\left[1 - \mathbf{FC}(1 + \mathbf{M}) + \mathbf{M}\frac{V_{di}}{\mathbf{VJ}}\right] & V_{di} > \mathbf{FC} \cdot \mathbf{VJ} \end{cases}$$

where $\mathbf{CJ} = \mathbf{CJE}$ for C_{de}, and where $\mathbf{CJ} = \mathbf{CJC}$ for C_{dc}. The diffusion capacitance (sometimes referred to as the transit time capacitance) is

$$C_{dif} = \mathbf{TT}G_d = \mathbf{TT}\frac{dI}{dV_{di}}$$

where I is the diode DC current given, G_d is the corresponding junction conductance, and where $\mathbf{TT} = \mathbf{TF}$ for C_{dife} and $\mathbf{TT} = \mathbf{TR}$ for C_{difc}.

Temperature Effects

SPICE temperature effects are default, but all levels of the BJT have a more advanced temperature compensation available. By specifying `TEMPMODEL=QUADRATIC` in the netlist, parameters can be interpolated quadratically between measured values extracted from data. In the BJT, IS and ISE are interpolated logarithmically because they can change over an order of magnitude or more for temperature ranges of interest. See the Section 2.1.14 for more details on how to include quadratic temperature effects.

For further information on BJT models, see [12]. For a thorough description of the U.C. Berkeley SPICE models see Reference [13].

VBIC Temperature Considerations

The VBIC (Q levels 10, 11, and 12) model all support a self-heating model. The model works by computing the power dissipated by all branches of the device, applying this power as a flow

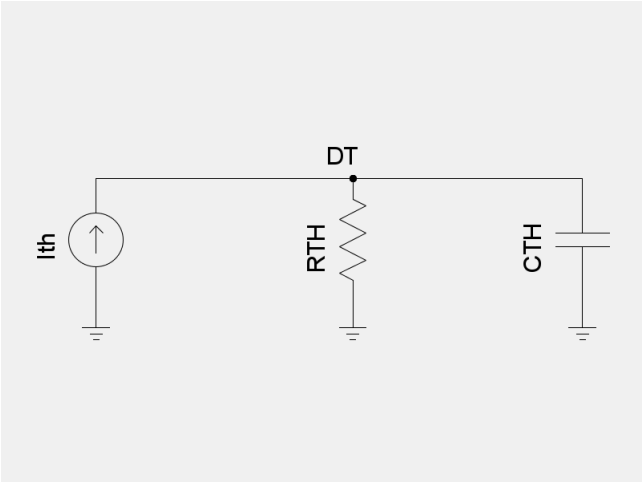

Figure 2.2. VBIC thermal network schematic.

through a small thermal network consisting of a power flow ("current") source through a thermal resistance and thermal capacitance, as shown in Figure 2.2. The circuit node DT will therefore be the "thermal potential" (temperature) across the parallel thermal resistance and capacitance. This temperature is the temperature rise due to self heating of the device, which is added to the ambient temperature and `DTEMP` parameter to obtain the device operating temperature.

In VBIC 1.2, the dt node must always be specified on the netlist line, and thermal power is always sourced into this node. If a node name other than ground is given, then the "voltage" on this node is the temperature rise due to self heating. If the ground node is used for the fourth node on the netlist line, then the self-heating effect is diabled — the voltage rise is always zero.

In VBIC 1.3, the dt node is optional on the netlist line. If not given, the dt node is used internally for thermal effects calculations, but not accessible from the rest of the netlist. Unlike VBIC 1.2, the VBIC 1.3 provides an instance parameter `SW_ET` that may be set to zero to turn off electrothermal self-heating effects. When set to zero, no thermal power is sourced into the dt node. This parameter defaults to 1, meaning that thermal power is computed and flows into dt even when dt is unspecified on the netlist and remains an internal node.

In both VBIC 1.2 and VBIC 1.3, setting RTH to zero does *NOT* disable the self-heating model, and does not short the dt node to ground, even though one might expect that to be the behavior. Rather, it simply removes the RTH resistor from the equivalent circuit of figure 2.2 and leaves the dt node floating. This is an important point to recognize when using the VBIC.

If a node name is given as the fourth node of a VBIC **Xyce** will emit warnings about the node not having a DC path to ground and being connected to only one device. These warnings may safely be ignored, and are an artifact of Xyce's connectivity checker. It is possible to silence this warning by adding a very large resistance between the dt node and ground — 1GOhm or 1TOhm are effectively the same as leaving the node floating, and will satisfy the connectivity checker's tests. This is safe *if and only if a nonzero* `RTH` *value is specified for the device.* If, however, RTH is zero, then dt is otherwise floating and your external resistance now becomes the primary path for

thermal power flow, and rather than turning off self-heating effects, it will be as if you had set RTH to a very large value.

The **Xyce** team therefore makes the following recommendations for VBIC users:

- The VBIC 1.2 HAS BEEN DEPRECATED SINCE RELEASE 6.6 and will be removed in a future version of **Xyce**. The VBIC 1.3 model should be used in preference to the VBIC 1.2 wherever possible. This model is more recent and is far more robust. VBIC 1.2 parameter extractions will work well in VBIC 1.3, with only minor changes.
- VBIC 1.2 in **Xyce** does not support excess phase effects, and so all parameters concerning excess phase are ignored. The **Xyce** team has observed that some users' VBIC 1.2 parameter extractions have non-zero excess phase parameters, and that sometimes **Xyce** will fail to converge when the equivalent VBIC 1.3 model is substituted. The VBIC 1.2 behavior can be recovered by setting the model parameter `TD` to zero, which will disable the excess phase effect in VBIC 1.3.

  If the excess phase effect is important to you, then you MUST use VBIC 1.3, and if you have the problem indicated above, you will probably need to perform a new parameter extraction to get a good value of the TD parameter that VBIC 1.2 was ignoring.
- VBIC 1.2 has a model parameter called `DTEMP`, which **Xyce** also recognized on the instance line. In VBIC 1.3 this parameter has been replaced by another called `TRISE`, which is only an instance parameter, and is unrecognized in model cards. VBIC 1.3 also recognizes `DTEMP` on the instance line as an alias for `TRISE`. If you are specifying `DTEMP` in your VBIC model cards, you will need to move it to the instance line instead in order for the parameter to be properly recognized by both VBIC 1.2 and VBIC 1.3.
- If not using the dt node as a way of thermally coupling devices to each other, leave it off of VBIC 1.3 instance lines, allowing it to be an internal variable. This will silence any connectivity warnings from Xyce. Since the dt node may be printed using the N() syntax even when internal, it is unnecessary to put a dt node on the instance line just to print the local temperature rise due to self-heating. The only reasons to include it on the instance line would be for backward compatibility to VBIC 1.2 netlists, or to implement a thermal coupling network between devices.
- Since VBIC 1.2 requires a non-ground dt node in order to enable electrothermal effects, if you must use VBIC 1.2 then the best approach is to ignore the warnings about the connectivity of the dt node.
- If you want to turn off all electrothermal effects in the VBIC 1.3, set the `SW_ET` parameter to zero, and do not include dt in the node list.
- If you want to turn off all electrothermal effects in VBIC 1.2, use 0 (ground) for the dt node (fourth node).
- If you set RTH to zero in VBIC 1.2, you should also ground the dt node, otherwise it will float and likely lead to convergence problems.
- If using a non-ground dt node on VBIC 1.2, and you really need to silence the connectivity warnings, tie this node to ground through a very large (1G or 1T) resistor. But never use this method when RTH is zero.

Level 1 BJT Tables

Table 2.48: Bipolar Junction Transistor Device Instance Parameters

Parameter	Description	Units	Default
AREA	Relative device area	–	1
IC1	Vector of initial values: Vbe,Vce. Vbe=IC1	V	0
IC2	Vector of initial values: Vbe,Vce. Vce=IC2	V	0
LAMBERTW	Flag for toggling the use of the lambert-W function instead of exponentials.	logical (T/F)	false
OFF	Initial condition of no voltage drops accross device	logical (T/F)	false
TEMP	Device temperature	°C	Ambient Temperature

Table 2.49: Bipolar Junction Transistor Device Model Parameters

Parameter	Description	Units	Default
AF	Flicker noise exponent	—	1
BF	Ideal maximum foward beta	–	100
BFM	Ideal maximum foward beta	–	100
BR	Ideal maximum reverse beta	–	1
BRM	Ideal maximum reverse beta	–	1
BV	Reverse early voltage	V	0
C2	Coefficient for base-emitter leak current.	—	0
C4	Coefficient for base-collector leak current.	—	0
CCS	Substrate zero-bias p-n capacitance	F	0
CDIS	Fraction of CJC connected internally to RB	–	1
CJC	Base-collector zero-bias p-n capacitance	F	0
CJE	Base-emitter zero-bias p-n capacitance	F	0
CJS	Substrate zero-bias p-n capacitance	F	0
CSUB	Substrate zero-bias p-n capacitance	F	0
EG	Bandgap voltage (barrier highth)	eV	1.11
ESUB	Substrate p-n grading factor	–	0
FC	Foward-bias depletion capacitor coefficient	–	0.5
IK	Corner for foward-beta high-current roll-off	A	0
IKF	Corner for foward-beta high-current roll-off	A	0
IKR	Corner for reverse-beta high-current roll-off	A	0

Table 2.49: Bipolar Junction Transistor Device Model Parameters

Parameter	Description	Units	Default
IOB	Current at which RB falls off by half	A	0
IRB	Current at which RB falls off by half	A	0
IS	Transport saturation current	A	1e-16
ISC	Base-collector leakage saturation current	A	0
ISE	Base-emitter leakage saturation current	A	0
ITF	Transit time dependancy on IC	—	0
JBF	Corner for foward-beta high-current roll-off	A	0
JBR	Corner for reverse-beta high-current roll-off	A	0
JLC	Base-collector leakage saturation current	A	0
JLE	Base-emitter leakage saturation current	A	0
JRB	Current at which RB falls off by half	A	0
JTF	Transit time dependancy on IC	—	0
KF	Flicker noise coefficient	–	0
MC	Base-collector p-n grading factor	–	0.33
ME	Base-emitter p-n grading factor	–	0.33
MJC	Base-collector p-n grading factor	–	0.33
MJE	Base-emitter p-n grading factor	–	0.33
MJS	Substrate p-n grading factor	–	0
MS	Substrate p-n grading factor	–	0
NC	Base-collector leakage emission coefficient	–	2
NE	Base-emitter leakage emission coefficient	–	1.5
NF	Foward current emission coefficient	–	1
NK	High current rolloff coefficient	–	0.5
NKF	High current rolloff coefficient	–	0.5
NLE	Base-emitter leakage emission coefficient	–	1.5
NR	Reverse current emission coefficient	–	1
PC	Base-collector built-in potential	V	0.75
PE	Base-emitter built-in potential	V	0.75
PS	Substrate built-in potential	V	0.75
PSUB	Substrate built-in potential	V	0.75
PT	Temperature exponent for IS. (synonymous with XTI)	—	3
PTF	Excess Phase at 1/(2pi*TF) Hz	degree	0
RB	Zero-bias (maximum) base resistance	Ω	0

Table 2.49: Bipolar Junction Transistor Device Model Parameters

Parameter	Description	Units	Default
RBM	Maximum base resistance	Ω	0
RC	Collector ohmic resistance	Ω	0
RE	Emitter ohmic resistance	Ω	0
TB	Foward and reverse beta temperature coefficient	–	0
TCB	Foward and reverse beta temperature coefficient	–	0
TEMPMODEL	Specifies the type of parameter interpolation over temperature	–	'NONE'
TF	Ideal foward transit time	s	0
TNOM	Parameter measurement temperature	°C	Ambient Temperature
TR	Ideal reverse transit time	s	0
VA	Foward early voltage	V	0
VAF	Foward early voltage	V	0
VAR	Reverse early voltage	V	0
VB	Reverse early voltage	V	0
VBF	Foward early voltage	V	0
VJC	Base-collector built-in potential	V	0.75
VJE	Base-emitter built-in potential	V	0.75
VJS	Substrate built-in potential	V	0.75
VRB	Reverse early voltage	V	0
VTF	Transit time dependancy on Vbc	V	0
XCJC	Fraction of CJC connected internally to RB	–	1
XTB	Foward and reverse beta temperature coefficient	–	0
XTF	Transit time bias dependence coefficient	–	0
XTI	Temperature exponent for IS. (synonymous with PT)	—	3

Level 10 BJT Tables (VBIC 1.2)

Table 2.50: VBIC 3T et cf v1.2 Device Instance Parameters

Parameter	Description	Units	Default
DTEMP	Device temperature (use 0.0 for ambient)	–	0
M	Number of devices in parallel	–	1

Table 2.51: VBIC 3T et cf v1.2 Device Model Parameters

Parameter	Description	Units	Default
AFN	Base-Emitter Flicker Noise coefficient (unused)	–	1
AJC	Base-Collector capacitor smoothing factor	–	-0.5
AJE	Base-Emitter capacitor smoothing factor	–	-0.5
AJS	Substrate-collector capacitor smoothing factor (unused)	–	-0.5
ART		–	0.1
AVC1	B-C weak avalanche parameter	V^{-1}	0
AVC2	B-C weak avalanche parameter	V^{-1}	0
BFN	B-E flicker noise dependence (unused)	–	1
CBCO	Extrinsic B-C overlap capacitance	F	0
CBEO	Extrinsic B-E overlap capacitance	F	0
CCSO	(unused)	–	0
CJC	B-C zero-bias capacitance	F	0
CJCP	S-C zero-bias capacitance	F	0
CJE	B-E zero-bias capacitance	F	0
CJEP	S-E zero-bias capacitance	F	0
CTH	Thermal capacitance	F	0
DEAR	Activation energy for ISRR	–	0
DTEMP	Device temperature (use 0.0 for ambient)	–	0
EA	Activation energy for IS	eV	1.12
EAIC	Activation energy for IBCI	eV	1.12
EAIE	Activation energy for IBEI	eV	1.12
EAIS	Activation energy for IBCIP	eV	1.12
EANC	Activation energy for IBCN	eV	1.12
EANE	Activation energy for IBEN	eV	1.12
EANS	Activation energy for IBCNP	eV	1.12
EAP	Activation energy for ISP	–	1.12
EBBE	(unused)	–	0
FC	Forward-bias depletion capacitance limit	–	0.9
GAMM	Epi doping parameter	–	0
HRCF	High current RC factor	–	0
IBBE		–	1e-06
IBCI	Ideal B-C saturation current	A	1e-16
IBCIP	Ideal parasitic B-C saturation current	A	0
IBCN	Nonideal B-C saturation current	A	0

Table 2.51: VBIC 3T et cf v1.2 Device Model Parameters

Parameter	Description	Units	Default
IBCNP	Nonideal parasitic B-C saturation current	A	0
IBEI	Ideal B-E saturation current	A	1e-18
IBEIP	Ideal parasitic B-E saturation current	A	0
IBEN	Nonideal B-E saturation current	A	0
IBENP	Nonideal parasitic B-E saturation current	A	0
IKF	Forward knee current	A	0
IKP	Parasitic knee current	A	0
IKR	Reverse knee current	A	0
IS	Transport saturation current	A	1e-16
ISP	Parasitic transport saturation current	A	0
ISRR	Saturation current for reverse operation	–	1
ITF	Coefficient of tf dependence on Ic	–	0
KFN	B-E flicker (1/f) noise coefficient (unused)	–	0
MC	B-C grading coefficient	–	0.33
ME	B-E grading coefficient	–	0.33
MS	S-C grading coefficient	–	0.33
NBBE		–	1
NCI	Ideal B-C emission coefficient	–	1
NCIP	Ideal parasitic B-C emission coefficient	–	1
NCN	Non-ideal B-C emission coefficient	–	2
NCNP	Non-ideal parasitic B-C emission coefficient	–	2
NEI	Ideal B-E emission coefficient	–	1
NEN	Non-ideal B-E emission coefficient	–	2
NF	Forward emission coefficient	–	1
NFP	Parasitic forward emission coefficient	–	1
NKF		–	0.5
NR	Reverse emission coefficient	–	1
PC	B-C built-in potential	–	0.75
PE	B-E built-in potential	–	0.75
PS	S-C built-in potential	–	0.75
QBM		–	0
QCO	Epi charge parameter	C	0
QTF	Variation of tf with base width modulation	–	0
RBI	Intrinsic base resistance	Ω	0
RBP	Parasitic base resistance	Ω	0

Table 2.51: VBIC 3T et cf v1.2 Device Model Parameters

Parameter	Description	Units	Default
RBX	Extrinsic base resistance	Ω	0
RCI	Intrinsic Collector resistance	Ω	0
RCX	Extrinsic Collector resistance	Ω	0
RE	Emitter resistance	Ω	0
RS	Substrate resistance	Ω	0
RTH	Thermal resistance, must be given for self-heating	Ω	0
TAVC	Temperature coefficient of Avc2	–	0
TD	Forward excess-phase delay time (unused in this version)	–	0
TF	Forward transit time	s	0
TNBBE		–	0
TNF	Temperature coefficient of Nf	–	0
TNOM	Nominal temperature	°C	27
TR	Reverse transit time	–	0
TVBBE1		–	0
TVBBE2		–	0
VBBE		–	0
VEF	Forward Early voltage	V	0
VER	Reverse Early voltage	V	0
VERS	Version of this VBIC model	–	1.2
VO	Epi drift saturation voltage	V	0
VREV		–	0
VRT		–	0
VTF	Coefficient of tf dependence on Vbc	–	0
WBE	Portion of Ibei from Vbei	–	1
WSP	Portion of Iccp from Vbep	–	1
XII	Temperature exponent of Ibei, Ibci, Ibeip, and Ibcip	–	3
XIKF		–	0
XIN	Temperature exponent of Iben, Ibcn, Ibenp, and Ibcnp	–	3
XIS	Temperature exponent of IS	–	3
XISR	Temperature exponent of ISRR	–	0
XRBI		–	0
XRBP		–	0

Table 2.51: VBIC 3T et cf v1.2 Device Model Parameters

Parameter	Description	Units	Default
XRBX		–	0
XRCI		–	0
XRCX		–	0
XRE	Temperature exponent of re	–	0
XRS	Temperature exponent of rs	–	0
XTF	Coefficient of tf with bias dependence	–	0
XVO	Temperature exponent of vo	–	0

Level 11 and 12 BJT Tables (VBIC 1.3)

The VBIC 1.3 (level 11 transistor for 3-terminal, level 12 for 4-terminal) supports a number of instance parameters that are not available in the VBIC 1.2. The level 11 and level 12 differ only by the number of required nodes. The level 11 is the 3-terminal device, having only collector, base, and emitter as required nodes. The level 12 is the 4-terminal device, requiring collector, base, emitter and substrate nodes. Both models support an optional 'dt' node as their last node on the instance line.

Model cards extracted for the VBIC 1.2 will mostly work with the VBIC 1.3, with one notable exception: in VBIC 1.2 the `DTEMP` parameter was a model parameter, and **Xyce** allowed it also to be specified on the instance line, overriding whatever was specified in the model. This parameter was replaced in VBIC 1.3 with the `TRISE` parameter, which is *only* an instance parameter. `DTEMP` and `DTA` are both supported as aliases for the `TRISE` instance parameter.

Table 2.52: VBIC 1.3 3T Device Instance Parameters

Parameter	Description	Units	Default
DTA	Alias for trise	°C	0
DTEMP	Alias for trise	°C	0
M	multiplicity factor	—	1
SW_ET	switch for self-heating: 0=no and 1=yes	—	1
SW_NOISE	switch for including noise: 0=no and 1=yes	—	1
TRISE	local temperature delta to ambient (before self-heating)	°C	0

Table 2.53: VBIC 1.3 3T Device Model Parameters

Parameter	Description	Units	Default
ABK	SiGe base current kink exponent	—	1
AFN	b-e flicker noise current exponent	—	1
AJC	b-c capacitance smoothing factor	—	-0.5
AJE	b-e capacitance smoothing factor	—	-0.5
AJS	c-s capacitance smoothing factor	—	-0.5
ART	smoothing parameter for reach-through	—	0.1
AVC1	b-c weak avalanche parameter 1	V^{-1}	0
AVC2	b-c weak avalanche parameter 2	—	0
AVCX1	bx-cx weak avalanche parameter 1	V^{-1}	0
AVCX2	bx-cx weak avalanche parameter 2	—	0
BBK	SiGe base current kink current factor	A	0
BFN	b-e flicker noise 1/f exponent	—	1
CBCO	extrinsic b-c overlap capacitance	F	0

Table 2.53: VBIC 1.3 3T Device Model Parameters

Parameter	Description	Units	Default
CBEO	extrinsic b-e overlap capacitance	F	0
CCSO	extrinsic c-s overlap capacitance	F	0
CJC	zero-bias b-c depletion capacitance	F	0
CJCP	zero-bias extrinsic c-s depletion capacitance	F	0
CJE	zero-bias b-e depletion capacitance	F	0
CJEP	zero-bias extrinsic b-c depletion capacitance	F	0
CTH	thermal capacitance	—	0
DEAR	delta activation energy for isrr	V	0
EA	activation energy for is	V	1.12
EAIC	activation energy for ibci and ibeip	V	1.12
EAIE	activation energy for ibei	V	1.12
EAIS	activation energy for ibcip	V	1.12
EANC	activation energy for ibcn and ibenp	V	1.12
EANE	activation energy for iben	V	1.12
EANS	activation energy for ibcnp	V	1.12
EAP	activation energy for isp	V	1.12
FC	forward bias depletion capacitance limit	—	0.9
GAMM	epi doping parameter	—	0
GMIN	minimum conductance	Ω^{-1}	1e-12
HRCF	high current collector resistance factor	—	0
IBBE	b-e breakdown current	A	1e-06
IBCI	ideal b-c saturation current	A	1e-16
IBCIP	ideal parasitic b-c saturation current	A	0
IBCN	non-ideal b-c saturation current	A	0
IBCNP	non-ideal parasitic b-c saturation current	A	0
IBEI	ideal b-e saturation current	A	1e-18
IBEIP	ideal parasitic b-e saturation current	A	0
IBEN	non-ideal b-e saturation current	A	0
IBENP	non-ideal parasitic b-e saturation current	A	0
IBKO	SiGe base current kink current reference	A	0
IKF	forward knee current (zero=infinite)	A	0
IKP	parasitic knee current (zero=infinite)	A	0
IKR	reverse knee current (zero=infinite)	A	0
IS	transport saturation current	A	1e-16
ISP	parasitic transport saturation current	A	0

Table 2.53: VBIC 1.3 3T Device Model Parameters

Parameter	Description	Units	Default
ISRR	ratio of is(reverse) to is(forward)	—	1
ITF	tf coefficient of Ic dependence	A	0
KFN	b-e flicker noise constant	—	0
MAXEXP	argument at which to linearize general exponentials	—	1e+22
MC	b-c grading coefficient	—	0.33
MCX	bx-cx grading coefficient for avalanche	—	0.33
ME	b-e grading coefficient	—	0.33
MS	c-s grading coefficient	—	0.33
NBBE	b-e breakdown emission coefficient	—	1
NCI	ideal b-c emission coefficient	—	1
NCIP	ideal parasitic b-c emission coefficient	—	1
NCN	non-ideal b-c emission coefficient	—	2
NCNP	non-ideal parasitic b-c emission coefficient	—	2
NEI	ideal b-e emission coefficient	—	1
NEN	non-ideal b-e emission coefficient	—	2
NF	fwd emission coefficient (ideality factor)	—	1
NFP	parasitic emission coeff (ideality factor)	—	1
NKF	high current beta roll-off parameter	—	0.5
NPN	npn transistor type	—	0
NR	rev emission coefficient (ideality factor)	—	1
PC	b-c built-in potential	V	0.75
PE	b-e built-in potential	V	0.75
PNJMAXI	current at which to linearize diode currents	A	1
PNP	pnp transistor type	—	0
PS	c-s built-in potential	V	0.75
QBM	base charge model selection switch: 0=GP and 1=SGP	—	0
QCO	epi charge parameter	C	0
QNIBEIR	ideal b-e quasi-neutral base recombination parameter	—	0
QTF	variation of tf with base-width modulation	—	0
RBI	intrinsic base resistance	Ω	0
RBP	parasitic transistor base resistance	Ω	0
RBX	extrinsic base resistance	Ω	0
RCI	intrinsic collector resistance	Ω	0

Table 2.53: VBIC 1.3 3T Device Model Parameters

Parameter	Description	Units	Default
RCX	extrinsic collector resistance	Ω	0
RE	extrinsic emitter resistance	Ω	0
RS	extrinsic substrate resistance	Ω	0
RTH	thermal resistance	—	0
SCALE	scale factor for instance geometries	—	1
SHRINK	shrink percentage for instance geometries	—	0
TAVC	temperature exponent of avc2	$°C^{-1}$	0
TAVCX	temperature exponent of avcx2	$°C^{-1}$	0
TCRTH	temperature exponent of rth	$°C^{-1}$	0
TCVEF	temperature exponent of vef	$°C^{-1}$	0
TCVER	temperature exponent of ver	$°C^{-1}$	0
TD	forward excess-phase delay time	s	0
TF	forward transit time	s	0
TMAX	maximum ambient temperature	°C	500
TMAXCLIP	clip maximum temperature	°C	500
TMIN	minimum ambient temperature	°C	-100
TMINCLIP	clip minimum temperature	°C	-100
TNBBE	temperature coefficient of nbbe	$°C^{-1}$	0
TNF	temperature exponent of nf and nr	$°C^{-1}$	0
TNOM	nominal (reference) temperature	°C	27
TR	reverse transit time	s	0
TVBBE1	linear temperature coefficient of vbbe	$°C^{-1}$	0
TVBBE2	quadratic temperature coefficient of vbbe	—	0
TYPE	transistor type: -1=npn and +1=pnp (overriden by npn or pnp)	—	-1
VBBE	b-e breakdown voltage	V	0
VEF	forward Early voltage (zero=infinite)	V	0
VER	reverse Early voltage (zero=infinite)	V	0
VO	epi drift saturation voltage	V	0
VPTE	SiGe base current kink voltage	V	0
VRT	reach-through voltage for Cbc limiting	V	0
VTF	tf coefficient of Vbci dependence	V	0
WBE	partitioning of Ibe/Ibex and Qbe/Qbex	—	1
WSP	partitioning of Iccp between Vbep and Vbci	—	1
XII	temperature exponent of ibei, ibci, ibeip, ibcip	—	3

Table 2.53: VBIC 1.3 3T Device Model Parameters

Parameter	Description	Units	Default
XIKF	temperature exponent of ikf	—	0
XIN	temperature exponent of iben, ibcn, ibenp, ibcnp	—	3
XIS	temperature exponent of is	—	3
XISR	temperature exponent for isrr	—	0
XRB	temperature exponent of rbx and rbi	—	0
XRBI	temperature exponent of rbi (overrides xrb)	—	0
XRBP	temperature exponent of rbp (overrides xrc)	—	0
XRBX	temperature exponent of rbx (overrides xrb)	—	0
XRC	temperature exponent of rci and rcx and rbp	—	0
XRCI	temperature exponent of rci (overrides xrc)	—	0
XRCX	temperature exponent of rcx (overrides xrc)	—	0
XRE	temperature exponent of re	—	0
XRS	temperature exponent of rs	—	0
XTF	tf bias dependence coefficient	—	0
XVO	temperature exponent of vo	—	0

Table 2.54: VBIC 1.3 4T Device Instance Parameters

Parameter	Description	Units	Default
DTA	Alias for trise	°C	0
DTEMP	Alias for trise	°C	0
M	multiplicity factor	—	1
SW_ET	switch for self-heating: 0=no and 1=yes	—	1
SW_NOISE	switch for including noise: 0=no and 1=yes	—	1
TRISE	local temperature delta to ambient (before self-heating)	°C	0

Table 2.55: VBIC 1.3 4T Device Model Parameters

Parameter	Description	Units	Default
ABK	SiGe base current kink exponent	—	1
AFN	b-e flicker noise current exponent	—	1
AJC	b-c capacitance smoothing factor	—	-0.5
AJE	b-e capacitance smoothing factor	—	-0.5
AJS	c-s capacitance smoothing factor	—	-0.5
ART	smoothing parameter for reach-through	—	0.1
AVC1	b-c weak avalanche parameter 1	V^{-1}	0
AVC2	b-c weak avalanche parameter 2	—	0
AVCX1	bx-cx weak avalanche parameter 1	V^{-1}	0
AVCX2	bx-cx weak avalanche parameter 2	—	0
BBK	SiGe base current kink current factor	A	0
BFN	b-e flicker noise 1/f exponent	—	1
CBCO	extrinsic b-c overlap capacitance	F	0
CBEO	extrinsic b-e overlap capacitance	F	0
CCSO	extrinsic c-s overlap capacitance	F	0
CJC	zero-bias b-c depletion capacitance	F	0
CJCP	zero-bias extrinsic c-s depletion capacitance	F	0
CJE	zero-bias b-e depletion capacitance	F	0
CJEP	zero-bias extrinsic b-c depletion capacitance	F	0
CTH	thermal capacitance	—	0
DEAR	delta activation energy for isrr	V	0
EA	activation energy for is	V	1.12
EAIC	activation energy for ibci and ibeip	V	1.12
EAIE	activation energy for ibei	V	1.12
EAIS	activation energy for ibcip	V	1.12

Table 2.55: VBIC 1.3 4T Device Model Parameters

Parameter	Description	Units	Default
EANC	activation energy for ibcn and ibenp	V	1.12
EANE	activation energy for iben	V	1.12
EANS	activation energy for ibcnp	V	1.12
EAP	activation energy for isp	V	1.12
FC	forward bias depletion capacitance limit	—	0.9
GAMM	epi doping parameter	—	0
GMIN	minimum conductance	Ω^{-1}	1e-12
HRCF	high current collector resistance factor	—	0
IBBE	b-e breakdown current	A	1e-06
IBCI	ideal b-c saturation current	A	1e-16
IBCIP	ideal parasitic b-c saturation current	A	0
IBCN	non-ideal b-c saturation current	A	0
IBCNP	non-ideal parasitic b-c saturation current	A	0
IBEI	ideal b-e saturation current	A	1e-18
IBEIP	ideal parasitic b-e saturation current	A	0
IBEN	non-ideal b-e saturation current	A	0
IBENP	non-ideal parasitic b-e saturation current	A	0
IBK0	SiGe base current kink current reference	A	0
IKF	forward knee current (zero=infinite)	A	0
IKP	parasitic knee current (zero=infinite)	A	0
IKR	reverse knee current (zero=infinite)	A	0
IS	transport saturation current	A	1e-16
ISP	parasitic transport saturation current	A	0
ISRR	ratio of is(reverse) to is(forward)	—	1
ITF	tf coefficient of Ic dependence	A	0
KFN	b-e flicker noise constant	—	0
MAXEXP	argument at which to linearize general exponentials	—	1e+22
MC	b-c grading coefficient	—	0.33
MCX	bx-cx grading coefficient for avalanche	—	0.33
ME	b-e grading coefficient	—	0.33
MS	c-s grading coefficient	—	0.33
NBBE	b-e breakdown emission coefficient	—	1
NCI	ideal b-c emission coefficient	—	1
NCIP	ideal parasitic b-c emission coefficient	—	1

Table 2.55: VBIC 1.3 4T Device Model Parameters

Parameter	Description	Units	Default
NCN	non-ideal b-c emission coefficient	—	2
NCNP	non-ideal parasitic b-c emission coefficient	—	2
NEI	ideal b-e emission coefficient	—	1
NEN	non-ideal b-e emission coefficient	—	2
NF	fwd emission coefficient (ideality factor)	—	1
NFP	parasitic emission coeff (ideality factor)	—	1
NKF	high current beta roll-off parameter	—	0.5
NPN	npn transistor type	—	0
NR	rev emission coefficient (ideality factor)	—	1
PC	b-c built-in potential	V	0.75
PE	b-e built-in potential	V	0.75
PNJMAXI	current at which to linearize diode currents	A	1
PNP	pnp transistor type	—	0
PS	c-s built-in potential	V	0.75
QBM	base charge model selection switch: 0=GP and 1=SGP	—	0
QCO	epi charge parameter	C	0
QNIBEIR	ideal b-e quasi-neutral base recombination parameter	—	0
QTF	variation of tf with base-width modulation	—	0
RBI	intrinsic base resistance	Ω	0
RBP	parasitic transistor base resistance	Ω	0
RBX	extrinsic base resistance	Ω	0
RCI	intrinsic collector resistance	Ω	0
RCX	extrinsic collector resistance	Ω	0
RE	extrinsic emitter resistance	Ω	0
RS	extrinsic substrate resistance	Ω	0
RTH	thermal resistance	—	0
SCALE	scale factor for instance geometries	—	1
SHRINK	shrink percentage for instance geometries	—	0
TAVC	temperature exponent of avc2	$^{\circ}C^{-1}$	0
TAVCX	temperature exponent of avcx2	$^{\circ}C^{-1}$	0
TCRTH	temperature exponent of rth	$^{\circ}C^{-1}$	0
TCVEF	temperature exponent of vef	$^{\circ}C^{-1}$	0
TCVER	temperature exponent of ver	$^{\circ}C^{-1}$	0

Table 2.55: VBIC 1.3 4T Device Model Parameters

Parameter	Description	Units	Default
TD	forward excess-phase delay time	s	0
TF	forward transit time	s	0
TMAX	maximum ambient temperature	°C	500
TMAXCLIP	clip maximum temperature	°C	500
TMIN	minimum ambient temperature	°C	-100
TMINCLIP	clip minimum temperature	°C	-100
TNBBE	temperature coefficient of nbbe	$°C^{-1}$	0
TNF	temperature exponent of nf and nr	$°C^{-1}$	0
TNOM	nominal (reference) temperature	°C	27
TR	reverse transit time	s	0
TVBBE1	linear temperature coefficient of vbbe	$°C^{-1}$	0
TVBBE2	quadratic temperature coefficient of vbbe	—	0
TYPE	transistor type: -1=npn and +1=pnp (overriden by npn or pnp)	—	-1
VBBE	b-e breakdown voltage	V	0
VEF	forward Early voltage (zero=infinite)	V	0
VER	reverse Early voltage (zero=infinite)	V	0
VO	epi drift saturation voltage	V	0
VPTE	SiGe base current kink voltage	V	0
VRT	reach-through voltage for Cbc limiting	V	0
VTF	tf coefficient of Vbci dependence	V	0
WBE	partitioning of Ibe/Ibex and Qbe/Qbex	—	1
WSP	partitioning of Iccp between Vbep and Vbci	—	1
XII	temperature exponent of ibei, ibci, ibeip, ibcip	—	3
XIKF	temperature exponent of ikf	—	0
XIN	temperature exponent of iben, ibcn, ibenp, ibcnp	—	3
XIS	temperature exponent of is	—	3
XISR	temperature exponent for isrr	—	0
XRB	temperature exponent of rbx and rbi	—	0
XRBI	temperature exponent of rbi (overrides xrb)	—	0
XRBP	temperature exponent of rbp (overrides xrc)	—	0
XRBX	temperature exponent of rbx (overrides xrb)	—	0
XRC	temperature exponent of rci and rcx and rbp	—	0
XRCI	temperature exponent of rci (overrides xrc)	—	0
XRCX	temperature exponent of rcx (overrides xrc)	—	0

Table 2.55: VBIC 1.3 4T Device Model Parameters

Parameter	Description	Units	Default
XRE	temperature exponent of re	—	0
XRS	temperature exponent of rs	—	0
XTF	tf bias dependence coefficient	—	0
XVO	temperature exponent of vo	—	0

Level 23 BJT Tables (FBH HBT_X)

Table 2.56: FBH HBT_X v2.1 Device Instance Parameters

Parameter	Description	Units	Default
L	Length of emitter fingers	m	3e-05
N	Number of emitter fingers	–	1
TEMP	Device operating temperature	°C	25
W	Width of emitter fingers	m	3e-06

Table 2.57: FBH HBT_X v2.1 Device Model Parameters

Parameter	Description	Units	Default
AHC		–	0
BF		–	100
BR		–	1
BVCEO		–	0
BVEBO		–	0
CJC		–	1e-15
CJE		–	1e-15
CMIN		–	1e-16
CPB		–	0
CPC		–	0
CQ		–	0
CTH		–	7e-07
DEBUG		–	0
DEBUGPLUS		–	0
IKF		–	0
IKR		–	0
JO		–	0.001
JK		–	0.0004
JSC		–	0
JSE		–	0
JSEE		–	0
JSF		–	2e-23
JSR		–	2e-17
KBETA		–	0
KC		–	0
KJC		–	1

Table 2.57: FBH HBT_X v2.1 Device Model Parameters

Parameter	Description	Units	Default
L	Length of emitter fingers	m	3e-05
LB		–	0
LC		–	0
LE		–	0
MC		–	0
MJC		–	0.5
MJE		–	0.5
MODE		–	1
N	Number of emitter fingers	–	1
NC		–	0
NE		–	0
NEE		–	0
NF		–	1
NOISE		–	1
NR		–	1
RB		–	1
RB2		–	1
RBBXX		–	1e+06
RBXX		–	1e+06
RC		–	1
RCIO		–	0.001
RCXX		–	1e+06
RE		–	1
RJK		–	0.001
RTH		–	0.1
TEMP	Device operating temperature	°C	25
TF		–	1e-12
TFT		–	0
THCS		–	0
TNOM		–	20
TR		–	1e-15
TRX		–	1e-15
VAF		–	0
VAR		–	0
VCES		–	0.001

Table 2.57: FBH HBT_X v2.1 Device Model Parameters

Parameter	Description	Units	Default
VG		–	1.3
VGB		–	0
VGBB		–	0
VGC		–	0
VGR		–	0
VJC		–	1.3
VJE		–	1.3
W	Width of emitter fingers	m	3e-06
XCJC		–	0.5
XJO		–	1

Level 230 BJT Tables (HICUM/L0)

Table 2.58: HICUM L0 v1.32 Device Instance Parameters

Parameter	Description	Units	Default
DT	Temperature change for particular transistor	–	0

Table 2.59: HICUM L0 v1.32 Device Model Parameters

Parameter	Description	Units	Default
AF	flicker noise exponent factor	–	2
AHC	Smoothing facor for current dependence	–	0.1
AHQ	Smoothing factor for the d.c. injection width	–	0
AJE	Ratio of maximum to zero-bias value	–	2.5
AJEDC	BE capacitance ratio Ratio maximum to zero-bias value for d.c. transfer current	–	2.5
ALCES	Relative TC of vces	–	0
ALEAV	TC of avalanche exponential factor	–	0
ALIQFH	Frist-order TC of iqfh	–	0
ALIT	Factor for additional delay time of transfer current	–	0.333
ALKAV	TC of avalanche prefactor	–	0
ALQF	Factor for additional delay time of minority charge	–	0.167
ALT0	Frist-order TC of tf0	–	0
ALVS	Relative TC of satur.drift velocity	–	0
AVER	bias dependence for reverse Early voltage	–	0
CBCPAR	Collector-base isolation (overlap) capacitance	–	0
CBEPAR	Emitter-base oxide capacitance	–	0
CJCI0	Total zero-bias BC depletion capacitance	–	1e-20
CJCX0	Zero-bias external BC depletion capacitance	–	1e-20
CJE0	Zero-bias BE depletion capacitance	–	1e-20
CJS0	Zero-bias SC depletion capacitance	–	1e-20
CTH	Thermal capacitance	–	0
DT0H		–	0
DVGBE	Bandgap difference between base and BE-junction	–	0
EAVL	Exponent factor	–	0
F1VG	Coefficient K1 in T-dependent bandgap equation	–	-0.000102377
F2VG	Coefficient K2 in T-dependent bandgap equation	–	0.00043215
FBC	Split factor = Cjci0/Cjc0	–	1

Table 2.59: HICUM L0 v1.32 Device Model Parameters

Parameter	Description	Units	Default
FGEO	Geometry factor	–	0.656
FIQF	flag for turning on base related critical current	–	0
FLNQS	Flag for turning on and off of vertical NQS effect	–	0
FLSH	Flag for self-heating calculation	–	0
GTE	Exponent factor for emmiter transit time	–	1
IBCS	BC saturation current	–	0
IBES	BE saturation current	–	1e-18
IQF	forward d.c. high-injection toll-off current	–	1e+06
IQFH	high-injection correction current	–	1e+06
IQR	inverse d.c. high-injection roll-off current	–	1e+06
IRES	BE recombination saturation current	–	0
IS	(Modified) saturation current	–	1e-16
ISCS	SC saturation current	–	0
IT_MOD	Flag for using third order solution for transfer current	–	0
ITSS	Substrate transistor transfer saturation current	–	0
KAVL	Prefactor	–	0
KF	flicker noise coefficient	–	0
KIQFH	Second-order TC of iqfh	–	0
KT0	Second-order TC of tf0	–	0
MBC	BC non-ideality factor	–	1
MBE	BE non-ideality factor	–	1
MCF	Non-ideality coefficient of forward collector current	–	1
MCR	Non-ideality coefficient of reverse collector current	–	1
MRE	BE recombination non-ideality factor	–	2
MSC	SC non-ideality factor	–	1
MSF	Substrate transistor transfer current non-ideality factor	–	1
RBI0	Internal base resistance at zero-bias	–	0
RBX	External base series resistance	–	0
RCI0	Low-field collector resistance under emitter	–	150
RCX	Emitter series resistance	–	0
RE	External collector series resistance	–	0
RTH	Thermal resistance	–	0

Table 2.59: HICUM L0 v1.32 Device Model Parameters

Parameter	Description	Units	Default
TO	low current transit time at Vbici=0	–	0
TBVL	SCR width modulation contribution	–	0
TEF0	Storage time in neutral emitter	–	0
TEF_TEMP	Flag for turning temperature dependence of tef0 on and off	–	1
TFH	high-injection correction factor	–	0
THCS	Saturation time at high current densities	–	0
TNOM	Temperature for which parameters are valid	–	27
TR	Storage time at inverse operation	–	0
TYPE	For transistor type NPN(+1) or PNP (-1)	–	1
VCES	Saturation voltage	–	0.1
VDCI	BC built-in voltage	–	0.7
VDCX	External BC built-in voltage	–	0.7
VDE	BE built-in voltage	–	0.9
VDEDC	BE charge built-in voltage for d.c. transfer current	–	0.9
VDS	SC built-in voltage	–	0.3
VEF	forward Early voltage (normalization volt.)	–	1e+06
VER	reverse Early voltage (normalization volt.)	–	1e+06
VGB	Bandgap-voltage	–	1.2
VGC	Effective collector bandgap-voltage	–	1.17
VGE	Effective emitter bandgap-voltage	–	1.17
VGS	Effective substrate bandgap-voltage	–	1.17
VLIM	Voltage dividing ohmic and satur.region	–	0.5
VPT	Punch-through voltage	–	100
VPTCI	Punch-through voltage of BC junction	–	100
VPTCX	Punch-through voltage	–	100
VPTS	SC punch-through voltage	–	100
VR0C	forward Early voltage (normalization volt.)	–	1e+06
VR0E	forward Early voltage (normalization volt.)	–	2.5
ZCI	BC exponent factor	–	0.333
ZCX	External BC exponent factor	–	0.333
ZE	BE exponent factor	–	0.5
ZEDC	charge BE exponent factor for d.c. transfer current	–	0.5
ZETABET	Exponent coefficient in BE junction current temperature dependence	–	3.5

Table 2.59: HICUM L0 v1.32 Device Model Parameters

Parameter	Description	Units	Default
ZETACI	TC of epi-collector diffusivity	–	0
ZETACT	Exponent coefficient in transfer current temperature dependence	–	3
ZETAIQF	TC of iqf	–	0
ZETARBI	TC of internal base resistance	–	0
ZETARBX	TC of external base resistance	–	0
ZETARCX	TC of external collector resistance	–	0
ZETARE	TC of emitter resistances	–	0
ZETARTH	Exponent factor for temperature dependent thermal resistance	–	0
ZETAVER	TC of Reverse Early voltage	–	-1
ZETAVGBE	TC of AVER	–	1
ZS	External SC exponent factor	–	0.3

Level 234 BJT Table (HICUM/L2)

NOTE: The HICUM/L2 model has no instance parameters.

Table 2.60: HICUM v2.34 Device Model Parameters

Parameter	Description	Units	Default
ABET	Exponent factor for tunneling current	–	40
ACBAR	Smoothing parameter for barrier voltage	–	0.01
AF	Flicker noise exponent factor	–	2
AFRE	Emitter resistance flicker noise exponent factor	–	2
AHC	Smoothing factor for current dependence of base and collector transit time	–	0.1
AHJEI	Parameter describing the slope of hjEi(VBE)	–	0
AICK	Smoothing term for ICK	–	0.001
AJEI	Ratio of maximum to zero-bias value of internal B-E capacitance	–	2.5
AJEP	Ratio of maximum to zero-bias value of peripheral B-E capacitance	–	2.5
ALB	Relative TC of forward current gain for V2.1 model	–	0
ALCES	Relative TC of VCES	–	0
ALFAV	Relative TC for FAVL	–	0
ALIT	Factor for additional delay time of transfer current	–	0.333
ALQAV	Relative TC for QAVL	–	0
ALQF	Factor for additional delay time of minority charge	–	0.167
ALRTH	First order relative TC of parameter Rth	–	0
ALT0	First order relative TC of parameter T0	–	0
ALVS	Relative TC of saturation drift velocity	–	0
C10	GICCR constant	–	2e-30
CBCPAR	Total parasitic B-C capacitance	–	0
CBEPAR	Total parasitic B-E capacitance	–	0
CFBE	Flag for determining where to tag the flicker noise source	–	-1
CJCI0	Internal B-C zero-bias depletion capacitance	–	1e-20
CJCX0	External B-C zero-bias depletion capacitance	–	1e-20
CJEI0	Internal B-E zero-bias depletion capacitance	–	1e-20
CJEP0	Peripheral B-E zero-bias depletion capacitance	–	1e-20
CJS0	C-S zero-bias depletion capacitance	–	0
CSCP0	Perimeter S-C zero-bias depletion capacitance	–	0
CSU	Substrate shunt capacitance	–	0

Table 2.60: HICUM v2.34 Device Model Parameters

Parameter	Description	Units	Default
CTH	Thermal capacitance	–	0
DELCK	Fitting factor for critical current	–	2
DT	Temperature change w.r.t. chip temperature for particular transistor	–	0
DT0H	Time constant for base and B-C space charge layer width modulation	–	0
DVGBE	Bandgap difference between B and B-E junction used for hjEi0 and hf0	–	0
F1VG	Coefficient K1 in T-dependent band-gap equation	–	-0.000102377
F2VG	Coefficient K2 in T-dependent band-gap equation	–	0.00043215
FAVL	Avalanche current factor	–	0
FBCPAR	Partitioning factor of parasitic B-C cap	–	0
FBEPAR	Partitioning factor of parasitic B-E cap	–	1
FCRBI	Ratio of HF shunt to total internal capacitance (lateral NQS effect)	–	0
FDQR0	Correction factor for modulation by B-E and B-C space charge layer	–	0
FGEO	Factor for geometry dependence of emitter current crowding	–	0.6557
FLCOMP	Flag for compatibility with v2.1 model (0=v2.1)	–	0
FLCONO	Flag for turning on and off of correlated noise implementation	–	0
FLNQS	Flag for turning on and off of vertical NQS effect	–	0
FLSH	Flag for turning on and off self-heating effect	–	0
FQI	Ration of internal to total minority charge	–	1
FTHC	Partitioning factor for base and collector portion	–	0
GTFE	Exponent factor for current dependence of neutral emitter storage time	–	1
HF0	Weight factor for the low current minority charge	–	1
HFC	Collector minority charge weighting factor in HBTs	–	1
HFE	Emitter minority charge weighting factor in HBTs	–	1
HJCI	B-C depletion charge weighting factor in HBTs	–	1
HJEI	B-E depletion charge weighting factor in HBTs	–	1
IBCIS	Internal B-C saturation current	–	1e-16
IBCXS	External B-C saturation current	–	0
IBEIS	Internal B-E saturation current	–	1e-18

Table 2.60: HICUM v2.34 Device Model Parameters

Parameter	Description	Units	Default
IBEPS	Peripheral B-E saturation current	–	0
IBETS	B-E tunneling saturation current	–	0
ICBAR	Normalization parameter	–	0
ICH	High-current correction for 2D and 3D effects	–	0
IREIS	Internal B-E recombination saturation current	–	0
IREPS	Peripheral B-E recombination saturation current	–	0
ISCS	C-S diode saturation current	–	0
ITSS	Substrate transistor transfer saturation current	–	0
KF	Flicker noise coefficient	–	0
KFRE	Emitter resistance flicker noise coefficient	–	0
KT0	Second order relative TC of parameter T0	–	0
LATB	Scaling factor for collector minority charge in direction of emitter width	–	0
LATL	Scaling factor for collector minority charge in direction of emitter length	–	0
MBCI	Internal B-C current ideality factor	–	1
MBCX	External B-C current ideality factor	–	1
MBEI	Internal B-E current ideality factor	–	1
MBEP	Peripheral B-E current ideality factor	–	1
MCF	Non-ideality factor for III-V HBTs	–	1
MREI	Internal B-E recombination current ideality factor	–	2
MREP	Peripheral B-E recombination current ideality factor	–	2
MSC	Ideality factor of C-S diode current	–	1
MSF	Forward ideality factor of substrate transfer current	–	1
QAVL	Exponent factor for avalanche current	–	0
QP0	Zero-bias hole charge	–	2e-14
RBI0	Zero bias internal base resistance	–	0
RBX	External base series resistance	–	0
RCI0	Internal collector resistance at low electric field	–	150
RCX	External collector series resistance	–	0
RE	Emitter series resistance	–	0
RHJEI	Smoothing parameter for hjEi(VBE) at high voltage	–	1
RSU	Substrate series resistance	–	0

Table 2.60: HICUM v2.34 Device Model Parameters

Parameter	Description	Units	Default
RTH	Thermal resistance	–	0
T0	Low current forward transit time at VBC=0V	–	0
TBHREC	Base current recombination time constant at B-C barrier for high forward injection	–	0
TBVL	Time constant for modeling carrier jam at low VCE	–	0
TEF0	Neutral emitter storage time	–	0
THCS	Saturation time constant at high current densities	–	0
TNOM	Temperature at which parameters are specified	–	27
TR	Storage time for inverse operation	–	0
TSF	Transit time for forward operation of substrate transistor	–	0
TUNODE	Specifies the base node connection for the tunneling current	–	1
TYPE	For transistor type NPN(+1) or PNP (-1)	–	1
VCBAR	Barrier voltage	–	0
VCES	Internal C-E saturation voltage	–	0.1
VDCI	Internal B-C built-in potential	–	0.7
VDCX	External B-C built-in potential	–	0.7
VDEI	Internal B-E built-in potential	–	0.9
VDEP	Peripheral B-E built-in potential	–	0.9
VDS	C-S built-in potential	–	0.6
VDSP	Perimeter S-C built-in potential	–	0.6
VGB	Bandgap voltage extrapolated to 0 K	–	1.17
VGC	Effective collector bandgap voltage	–	1.17
VGE	Effective emitter bandgap voltage	–	1.17
VGS	Effective substrate bandgap voltage	–	1.17
VLIM	Voltage separating ohmic and saturation velocity regime	–	0.5
VPT	Collector punch-through voltage	–	100
VPTCI	Internal B-C punch-through voltage	–	100
VPTCX	External B-C punch-through voltage	–	100
VPTS	C-S punch-through voltage	–	100
VPTSP	Perimeter S-C punch-through voltage	–	100
ZCI	Internal B-C grading coefficient	–	0.4
ZCX	External B-C grading coefficient	–	0.4

Table 2.60: HICUM v2.34 Device Model Parameters

Parameter	Description	Units	Default
ZEI	Internal B-E grading coefficient	–	0.5
ZEP	Peripheral B-E grading coefficient	–	0.5
ZETABET	Exponent coefficient in B-E junction current temperature dependence	–	3.5
ZETACI	Temperature exponent for RCI0	–	0
ZETACT	Exponent coefficient in transfer current temperature dependence	–	3
ZETACX	Temperature exponent of mobility in substrate transistor transit time	–	1
ZETAHJEI	Temperature coefficient for ahjEi	–	1
ZETARBI	Temperature exponent of internal base resistance	–	0
ZETARBX	Temperature exponent of external base resistance	–	0
ZETARCX	Temperature exponent of external collector resistance	–	0
ZETARE	Temperature exponent of emitter resistance	–	0
ZETARTH	Temperature coefficient for Rth	–	0
ZETAVGBE	Temperature coefficient for hjEi0	–	1
ZS	C-S grading coefficient	–	0.5
ZSP	Perimeter S-C grading coefficient	–	0.5

Table 2.61: MEXTRAM 504.12.1 Device Instance Parameters

Parameter	Description	Units	Default
M	Alias for MULT	—	1
MULT	Multiplication factor	—	1

Table 2.62: MEXTRAM 504.12.1 Device Model Parameters

Parameter	Description	Units	Default
AB	Temperature coefficient of the resistivity of the base	—	1
AC	Temperature coefficient of the resistivity of the collector contact	—	2
ACBL	Temperature coefficient of the resistivity of the collector buried layer	—	2
AE	Temperature coefficient of the resistivity of the emitter	—	0
AEPI	Temperature coefficient of the resistivity of the epilayer	—	2.5
AEX	Temperature coefficient of the resistivity of the extrinsic base	—	0.62
AF	Exponent of the Flicker-noise	—	2
AQBO	Temperature coefficient of the zero-bias base charge	—	0.3
AS	Substrate temperature coefficient	—	1.58
ASUB	Temperature coefficient for mobility of minorities in the substrate	—	2
AVGEB	Temperature coefficient band-gap voltage for Zener effect emitter-base junction	—	0.000473
AXI	Smoothness parameter for the onset of quasi-saturation	—	0.3
BF	Ideal forward current gain	—	215
BRI	Ideal reverse current gain	—	7
CBCO	Collector-base overlap capacitance	—	0
CBEO	Emitter-base overlap capacitance	—	0
CJC	Zero-bias collector-base depletion capacitance	—	7.8e-14
CJE	Zero-bias emitter-base depletion capacitance	—	7.3e-14
CJS	Zero-bias collector-substrate depletion capacitance	—	3.15e-13

Table 2.62: MEXTRAM 504.12.1 Device Model Parameters

Parameter	Description	Units	Default
DAIS	Fine tuning of temperature dependence of C-E saturation current	—	0
DEG	Bandgap difference over the base	—	0
DTA	Difference between the local and global ambient temperatures	—	0
DVGBF	Band-gap voltage difference of the forward current gain	—	0.05
DVGBR	Band-gap voltage difference of the reverse current gain	—	0.045
DVGTE	Band-gap voltage difference of emitter stored charge	—	0.05
EXAVL	Flag for extended modeling of avalanche currents	—	0
EXMOD	Flag for extended modeling of the reverse current gain	—	1
EXPHI	Flag for the distributed high-frequency effects in transient	—	1
EXSUB	Flag for extended modelling of substrate currents	—	0
FTAUN	Fraction of noise transit time to total transit time	—	0
GMIN	Minimum conductance	—	1e-13
IBF	Saturation current of the non-ideal forward base current	—	2.7e-15
IBR	Saturation current of the non-ideal reverse base current	—	1e-15
ICSS	Collector-substrate ideal saturation current	—	-1
IHC	Critical current for velocity saturation in the epilayer	—	0.004
IK	Collector-emitter high injection knee current	—	0.1
IKS	Base-substrate high injection knee current	—	0.00025
IS	Collector-emitter saturation current	—	2.2e-17
ISS	Base-substrate saturation current	—	4.8e-17
IZEB	Pre-factor of emitter-base Zener tunneling current	—	0
KAVL	Switch for white noise contribution due to avalanche	—	0
KC	Switch for RF correlation noise model selection	—	0
KE	Fraction of QE in excess phase shift	—	0
KF	Flicker-noise coefficient of the ideal base current	—	2e-11

Table 2.62: MEXTRAM 504.12.1 Device Model Parameters

Parameter	Description	Units	Default
KFN	Flicker-noise coefficient of the non-ideal base current	—	2e-11
LEVEL	Model level	—	504
M	Alias for MULT	—	1
MC	Coefficient for current modulation of CB depletion capacitance	—	0.5
MLF	Non-ideality factor of the non-ideal forward base current	—	2
MTAU	Non-ideality factor of the emitter stored charge	—	1
MULT	Multiplication factor	—	1
NZEB	Coefficient of emitter-base Zener tunneling current	—	22
PC	Collector-base grading coefficient	—	0.5
PE	Emitter-base grading coefficient	—	0.4
PS	Collector-substrate grading coefficient	—	0.34
RBC	Constant part of the base resistance	—	23
RBV	Zero-bias value of the variable part of the base resistance	—	18
RCBLI	Resistance Collector Buried Layer Intrinsic	—	0
RCBLX	Resistance Collector Buried Layer eXtrinsic	—	0
RCC	Constant part of the collector resistance	—	12
RCV	Resistance of the un-modulated epilayer	—	150
RE	Emitter resistance	—	5
SCRCV	Space charge resistance of the epilayer	—	1250
SFH	Current spreading factor of avalanche model when EXAVL=1	—	0.3
TAUB	Transit time of stored base charge	—	4.2e-12
TAUE	Minimum transit time of stored emitter charge	—	2e-12
TAUR	Transit time of reverse extrinsic stored base charge	—	5.2e-10
TEPI	Transit time of stored epilayer charge	—	4.1e-11
TREF	Reference temperature	—	25
TVGEB	Temperature coefficient band-gap voltage for Zener effect emitter-base junction	—	636
TYPE	Flag for NPN (1) or PNP (-1) transistor type	—	1
VAVL	Voltage determining curvature of avalanche current	—	3
VDC	Collector-base diffusion voltage	—	0.68

Table 2.62: MEXTRAM 504.12.1 Device Model Parameters

Parameter	Description	Units	Default
VDE	Emitter-base diffusion voltage	—	0.95
VDS	Collector-substrate diffusion voltage	—	0.62
VEF	Forward Early voltage	—	44
VER	Reverse Early voltage	—	2.5
VGB	Band-gap voltage of the base	—	1.17
VGC	Band-gap voltage of the collector	—	1.18
VGJ	Band-gap voltage recombination emitter-base junction	—	1.15
VGS	Band-gap voltage of the substrate	—	1.2
VGZEB	Band-gap voltage at Tref of Zener effect emitter-base junction	—	1.15
VLR	Cross-over voltage of the non-ideal reverse base current	—	0.2
WAVL	Epilayer thickness used in weak-avalanche model	—	1.1e-06
XCJC	Fraction of CB depletion capacitance under the emitter	—	0.032
XCJE	Sidewall fraction of the emitter-base depletion capacitance	—	0.4
XEXT	Part of currents and charges that belong to extrinsic region	—	0.63
XIBI	Part of ideal base current that belongs to the sidewall	—	0
XP	Constant part of Cjc	—	0.35
XQB	Emitter-fraction of base diffusion charge	—	0.333333
XREC	Pre-factor of the recombination part of Ib1	—	0

Table 2.63: MEXTRAM 504.12.1 with self heating Device Instance Parameters

Parameter	Description	Units	Default
M	Alias for MULT	—	1
MULT	Multiplication factor	—	1

Table 2.64: MEXTRAM 504.12.1 with self heating Device Model Parameters

Parameter	Description	Units	Default
AB	Temperature coefficient of the resistivity of the base	—	1
AC	Temperature coefficient of the resistivity of the collector contact	—	2
ACBL	Temperature coefficient of the resistivity of the collector buried layer	—	2
AE	Temperature coefficient of the resistivity of the emitter	—	0
AEPI	Temperature coefficient of the resistivity of the epilayer	—	2.5
AEX	Temperature coefficient of the resistivity of the extrinsic base	—	0.62
AF	Exponent of the Flicker-noise	—	2
AQBO	Temperature coefficient of the zero-bias base charge	—	0.3
AS	Substrate temperature coefficient	—	1.58
ASUB	Temperature coefficient for mobility of minorities in the substrate	—	2
ATH	Temperature coefficient of the thermal resistance	—	0
AVGEB	Temperature coefficient band-gap voltage for Zener effect emitter-base junction	—	0.000473
AXI	Smoothness parameter for the onset of quasi-saturation	—	0.3
BF	Ideal forward current gain	—	215
BRI	Ideal reverse current gain	—	7
CBCO	Collector-base overlap capacitance	—	0
CBEO	Emitter-base overlap capacitance	—	0
CJC	Zero-bias collector-base depletion capacitance	—	7.8e-14
CJE	Zero-bias emitter-base depletion capacitance	—	7.3e-14
CJS	Zero-bias collector-substrate depletion capacitance	—	3.15e-13

Table 2.64: MEXTRAM 504.12.1 with self heating Device Model Parameters

Parameter	Description	Units	Default
CTH	Thermal capacitance	—	3e-09
DAIS	Fine tuning of temperature dependence of C-E saturation current	—	0
DEG	Bandgap difference over the base	—	0
DTA	Difference between the local and global ambient temperatures	—	0
DVGBF	Band-gap voltage difference of the forward current gain	—	0.05
DVGBR	Band-gap voltage difference of the reverse current gain	—	0.045
DVGTE	Band-gap voltage difference of emitter stored charge	—	0.05
EXAVL	Flag for extended modeling of avalanche currents	—	0
EXMOD	Flag for extended modeling of the reverse current gain	—	1
EXPHI	Flag for the distributed high-frequency effects in transient	—	1
EXSUB	Flag for extended modelling of substrate currents	—	0
FTAUN	Fraction of noise transit time to total transit time	—	0
GMIN	Minimum conductance	—	1e-13
IBF	Saturation current of the non-ideal forward base current	—	2.7e-15
IBR	Saturation current of the non-ideal reverse base current	—	1e-15
ICSS	Collector-substrate ideal saturation current	—	-1
IHC	Critical current for velocity saturation in the epilayer	—	0.004
IK	Collector-emitter high injection knee current	—	0.1
IKS	Base-substrate high injection knee current	—	0.00025
IS	Collector-emitter saturation current	—	2.2e-17
ISS	Base-substrate saturation current	—	4.8e-17
IZEB	Pre-factor of emitter-base Zener tunneling current	—	0
KAVL	Switch for white noise contribution due to avalanche	—	0
KC	Switch for RF correlation noise model selection	—	0
KE	Fraction of QE in excess phase shift	—	0

Table 2.64: MEXTRAM 504.12.1 with self heating Device Model Parameters

Parameter	Description	Units	Default
KF	Flicker-noise coefficient of the ideal base current	—	2e-11
KFN	Flicker-noise coefficient of the non-ideal base current	—	2e-11
LEVEL	Model level	—	504
M	Alias for MULT	—	1
MC	Coefficient for current modulation of CB depletion capacitance	—	0.5
MLF	Non-ideality factor of the non-ideal forward base current	—	2
MTAU	Non-ideality factor of the emitter stored charge	—	1
MULT	Multiplication factor	—	1
NZEB	Coefficient of emitter-base Zener tunneling current	—	22
PC	Collector-base grading coefficient	—	0.5
PE	Emitter-base grading coefficient	—	0.4
PS	Collector-substrate grading coefficient	—	0.34
RBC	Constant part of the base resistance	—	23
RBV	Zero-bias value of the variable part of the base resistance	—	18
RCBLI	Resistance Collector Buried Layer Intrinsic	—	0
RCBLX	Resistance Collector Buried Layer eXtrinsic	—	0
RCC	Constant part of the collector resistance	—	12
RCV	Resistance of the un-modulated epilayer	—	150
RE	Emitter resistance	—	5
RTH	Thermal resistance	—	300
SCRCV	Space charge resistance of the epilayer	—	1250
SFH	Current spreading factor of avalanche model when EXAVL=1	—	0.3
TAUB	Transit time of stored base charge	—	4.2e-12
TAUE	Minimum transit time of stored emitter charge	—	2e-12
TAUR	Transit time of reverse extrinsic stored base charge	—	5.2e-10
TEPI	Transit time of stored epilayer charge	—	4.1e-11
TREF	Reference temperature	—	25
TVGEB	Temperature coefficient band-gap voltage for Zener effect emitter-base junction	—	636
TYPE	Flag for NPN (1) or PNP (-1) transistor type	—	1

Table 2.64: MEXTRAM 504.12.1 with self heating Device Model Parameters

Parameter	Description	Units	Default
VAVL	Voltage determining curvature of avalanche current	—	3
VDC	Collector-base diffusion voltage	—	0.68
VDE	Emitter-base diffusion voltage	—	0.95
VDS	Collector-substrate diffusion voltage	—	0.62
VEF	Forward Early voltage	—	44
VER	Reverse Early voltage	—	2.5
VGB	Band-gap voltage of the base	—	1.17
VGC	Band-gap voltage of the collector	—	1.18
VGJ	Band-gap voltage recombination emitter-base junction	—	1.15
VGS	Band-gap voltage of the substrate	—	1.2
VGZEB	Band-gap voltage at Tref of Zener effect emitter-base junction	—	1.15
VLR	Cross-over voltage of the non-ideal reverse base current	—	0.2
WAVL	Epilayer thickness used in weak-avalanche model	—	1.1e-06
XCJC	Fraction of CB depletion capacitance under the emitter	—	0.032
XCJE	Sidewall fraction of the emitter-base depletion capacitance	—	0.4
XEXT	Part of currents and charges that belong to extrinsic region	—	0.63
XIBI	Part of ideal base current that belongs to the sidewall	—	0
XP	Constant part of Cjc	—	0.35
XQB	Emitter-fraction of base diffusion charge	—	0.333333
XREC	Pre-factor of the recombination part of Ib1	—	0

2.3.17 Junction Field-Effect Transistor (JFET)

Symbol

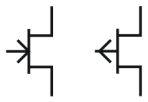

Instance Form

```
J<name> <drain node> <gate node> <source node> <model name> + [area
value] [device parameters]
```

Examples

```
JIN 100 1 0 JFAST
J13 22 14 23 JNOM 2.0
J1 1 2 0 2N5114
```

Model Form

```
.MODEL <model name> NJF [model parameters]
.MODEL <model name> PJF [model parameters]
```

Parameters and Options

`drain node`
: Node connected to drain.

`gate node`
: Node connected to gate.

`source node`
: Node connected to source.

`source node`
: Name of model defined in .MODEL line.

`area value`
: The `JFET` is modeled as an intrinsic FET using an ohmic resistance (`RD/area`) in series with the drain and another ohmic resistance (`RS/area`) in series with the source. `area` is an area factor with a default of `1`.

`device parameters`
: Parameters listed in Table 2.65 may be provided as space separated `<parameter>=<value>` specifications as needed. Any number of parameters may be specified.

Comments

The `JFET` was first proposed and analyzed by Shockley. The SPICE- compatible `JFET` model is an approximation to the Shockley analysis that employs an adjustable parameter B. Both the Shockley formulation and the SPICE approximation are available in Xyce.

Device Parameters

Table 2.65: JFET Device Instance Parameters

Parameter	Description	Units	Default
AREA	Device area	m^2	1
TEMP	Device temperature	–	Ambient Tempera-ture

Model Parameters

Table 2.66: JFET Device Model Parameters

Parameter	Description	Units	Default
AF	Flicker noise exponent	–	1
B	Doping tail parameter (level 1)	V^{-1}	1
BETA	Transconductance parameter	A/V^2	0.0001
CGD	Zero-bias gate-drain junction capacitance	F	0
CGS	Zero-bias gate-source junction capacitance	F	0
DELTA	Saturation voltage parrameter (level 2)	V	0
FC	Coefficient for forward-bias depletion capacitance	F	0.5
IS	Gate junction saturation current	A	1e-14
KF	Flicker noise coefficient	–	0.05
LAMBDA	Channel length modulation	V^{-1}	0
PB	Gate junction potential	V	1
RD	Drain ohmic resistance	Ω	0
RS	Source ohmic resistance	Ω	0
TEMPMODEL	Specifies the type of parameter interpolation over temperature	–	'NONE'
THETA	Mobility modulation parameter (level 2)	V^{-1}	0
TNOM	Nominal device temperature	°C	Ambient Tempera-ture
VTO	Threshold voltage	V	-2

Device Parameters

Table 2.67: JFET Device Instance Parameters

Parameter	Description	Units	Default
AREA	Device area	m^2	1
TEMP	Device temperature	–	Ambient Temperature

Model Parameters

Table 2.68: JFET Device Model Parameters

Parameter	Description	Units	Default
AF	Flicker noise exponent	–	1
B	Doping tail parameter (level 1)	V^{-1}	1
BETA	Transconductance parameter	A/V^2	0.0001
CGD	Zero-bias gate-drain junction capacitance	F	0
CGS	Zero-bias gate-source junction capacitance	F	0
DELTA	Saturation voltage parrameter (level 2)	V	0
FC	Coefficient for forward-bias depletion capacitance	F	0.5
IS	Gate junction saturation current	A	1e-14
KF	Flicker noise coefficient	–	0.05
LAMBDA	Channel length modulation	V^{-1}	0
PB	Gate junction potential	V	1
RD	Drain ohmic resistance	Ω	0
RS	Source ohmic resistance	Ω	0
TEMPMODEL	Specifies the type of parameter interpolation over temperature	–	'NONE'
THETA	Mobility modulation parameter (level 2)	V^{-1}	0
TNOM	Nominal device temperature	°C	Ambient Temperature
VTO	Threshold voltage	V	-2

JFET Level selection

Xyce supports two JFET models. LEVEL=1, the default, is the SPICE 3f5 treatment. This model employs a doping profile parameter B. When B=1, the original SPICE square law is exactly implemented, and when B=0.6 the model is close to that of Shockley.

When LEVEL=2 is selected, the Shockley model is used with some additional physics effects: channel length modulation and the effect of gate electric field on mobility. An additional parameter, DELTA, is added to the LEVEL 2 model that allows the user to adjust the saturation voltage.

JFET Power Calculations

Power dissipated in the transistor is calculated with $I_D * V_{DS} + I_G * V_{GS}$ where I_D is the drain current, I_G is the gate current, V_{DS} is the voltage drop between the drain and the source and V_{GS} is the voltage drop between the gate and the source. This formula may differ from other simulators, such as HSpice and PSpice.

2.3.18 Metal-Semiconductor FET (MESFET)

Symbol

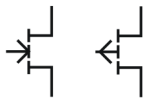

Instance Form

```
Z<name> < drain node> <gate node> <source node> <model name>
+ [area value] [device parameters]
```

Model Form

```
.MODEL <model name> NMF [model parameters]
.MODEL <model name> PMF [model parameters]
```

Examples

```
Z1 2 3 0 MESMOD AREA=1.4
Z1 7 2 3 ZM1
```

Parameters and Options

`drain node`
: Node connected to drain.

`gate node`
: Node connected to gate.

`source node`
: Node connected to source.

`source node`
: Name of model defined in .MODEL line.

`area value`
: The `MESFET` is modeled as an intrinsic FET using an ohmic resistance (`RD/area`) in series with the drain and another ohmic resistance (`RS/area`) in series with the source. `area value` is a scaling factor with a default of 1.

`device parameters`
: Parameters listed in Table 2.69 may be provided as space separated `<parameter>=<value>` specifications as needed. Any number of parameters may be specified.

Comments

Although MESFETs can be made of Si, such devices are not as common as GaAs MESFETS. And since the mobility of electrons is much higher than holes in GaAs, nearly all commercial devices are n-type MESFETS.

Device Parameters

Table 2.69: MESFET Device Instance Parameters

Parameter	Description	Units	Default
AREA	device area	m^2	1
TEMP	Device temperature	–	Ambient Temperature

Model Parameters

Table 2.70: MESFET Device Model Parameters

Parameter	Description	Units	Default
AF	Flicker noise exponent	–	1
ALPHA	Saturation voltage parameter	V^{-1}	2
B	Doping tail parameter	V^{-1}	0.3
BETA	Transconductance parameter	A/V^2	0.0025
CGD	Zero-bias gate-drain junction capacitance	F	0
CGS	Zero-bias gate-source junction capacitance	F	0
FC	Coefficient for forward-bias depletion capacitance	F	0.5
IS	Gate junction saturation current	A	1e-14
KF	Flicker noise coefficient	–	0.05
LAMBDA	Channel length modulation	V^{-1}	0
PB	Gate junction potential	V	1
RD	Drain ohmic resistance	Ω	0
RS	Source ohmic resistance	Ω	0
TEMPMODEL	Specifies the type of parameter interpolation over temperature	–	'NONE'
TNOM	Nominal device temperature	°C	Ambient Temperature
VTO	Threshold voltage	V	0

MESFET Power Calculations

Power dissipated in the transistor is calculated with $I_D * V_{DS} + I_G * V_{GS}$ where I_D is the drain current, I_G is the gate current, V_{DS} is the voltage drop between the drain and the source and V_{GS} is the voltage drop between the gate and the source. This formula may differ from other simulators, such as HSpice and PSpice.

2.3.19 MOS Field Effect Transistor (MOSFET)

Symbol

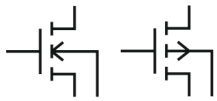

Instance Form

```
M<name> <drain node> <gate node> <source node>
+ <bulk/substrate node> <model name>
+ [L=<value>] [W=<value>]
+ [AD=<value>] [AS=<value>]
+ [PD=<value>] [PS=<value>]
+ [NRD=<value>] [NRS=<value>]
+ [M=<value] [IC=<value, ...>]
```

Special Form (BSIMSOI)

```
M<name> <drain node> <gate node> <source node>
+ <substrate node (E)>
+ [<External body contact (P)>]
+ [<internal body contact (B)>]
+ [<temperature node (T)>]
+ <model name>
+ [L=<value>] [W=<value>]
+ [AD=<value>] [AS=<value>]
+ [PD=<value>] [PS=<value>]
+ [NRD=<value>] [NRS=<value>] [NRB=<value>]
+ [BJTOFF=<value>]
+ [IC=<val>,<val>,<val>,<val>,<val>]
+ [RTH0=<val>] [CTH0=<val>]
+ [NBC=<val>] [NSEG=<val>] [PDBCP=<val>] [PSBCP=<val>]
+ [AGBCP=<val>] [AEBCP=<val>] [VBSUSR=<val>] [TNODEOUT]
+ [FRBODY=<val>] [M=<value>]
```

Special Form (MVS)

```
M<name> <drain node> <gate node> <source node> <model name>
```

Model Form

```
.MODEL <model name> NMOS [model parameters]
.MODEL <model name> PMOS [model parameters]
```

Examples

```
M5 4 12 3 0 PNOM L=20u W=10u
M3 5 13 10 0 PSTRONG
M6 7 13 10 0 PSTRONG M=2
M8 10 12 100 100 NWEAK L=30u W=20u
+ AD=288p AS=288p PD=60u PS=60u NRD=14 NRS=24
```

Parameters and Options

L

M The MOSFET channel length and width that are decreased to get the actual channel length and width. They may be given in the device .MODEL or .OPTIONS statements. The value in the device statement overrides the value in the model statement, which overrides the value in the .OPTIONS statement. If L or W values are not given, their default value is 100 μm.

AD

AS The drain and source diffusion areas. Defaults for AD and AS can be set in the .OPTIONS statement. If AD or AS defaults are not set, their default value is 0.

PD

PS The drain and source diffusion perimeters. Their default value is 0.

NRD

NRS Multipliers (in units of □) that can be multiplied by RSH to yield the parasitic (ohmic) resistances of the drain (RD) and source (RS), respectively. NRD, NRS default to 0.

Consider a square sheet of resistive material. Analysis shows that the resistance between two parallel edges of such a sheet depends upon its composition and thickness, but is independent of its size as long as it is square. In other words, the resistance will be the same whether the square's edge is 2 mm, 2 cm, or 2 m. For this reason, the *sheet resistance* of such a layer, abbreviated RSH, has units of Ohms per square, written Ω/□.

M If specified, the value is used as a number of parallel MOSFETs to be simulated. For example, if M=2 is specified, **Xyce** simulates two identical mosfets connected to the same nodes in parallel.

IC The BSIM3 (model level 9), BSIM4 (model level 14 or 54) and BSIMSOI (model level 10) allow one to specify the initial voltage difference across nodes of the device during the DC operating point calculation. For the BSIM3 and BSIM4 the syntax is IC=V_{ds}, V_{gs}, V_{bs} where V_{ds} is the voltage difference between the drain and source, V_{gs} is the voltage difference between the gate and source and V_{bs} is the voltage difference between the body and source. The BSIMSOI device's initial condition syntax is IC=$V_{ds}, V_{gs}, V_{bs}, V_{es}, V_{ps}$ where the two extra terms are the voltage difference between the substrate and source, and the external body and source nodes respectively. Note that for any of these lists of voltage differences, fewer than the full number of options may be specified. For example, IC=5.0 specifies an initial condition on V_{ds} but does not specifiy any initial conditions on the other nodes. Therefore, one cannot specify V_{gs} without specifying V_{ds}, etc.

It is illegal to specify initial conditions on any nodes that are tied together. **Xyce** attempts to catch such errors, but complex circuits may stymie this error trap.

BSIMSOI Options

There are a large number of extra instance parameters and optional nodes available for the BSIMSOI (level 10) MOSFET.

`substrate node`
: The fourth node of the BSIMSOI device is always the substrate node, which is referred to as the `E` node.

`external body contact node`
: If given, the fifth node is the external body contact node, `P`. It is connected to the internal body node through a body tie resistor. If `P` is not given, the internal body node is not accessible from the netlist and floats.

  If there are only five nodes specified and `TNODEOUT` is also specified, the fifth node is the temperature node instead.

`internal body contact node`
: If given, the sixth node is the internal body contact node, `B`. It is connected to the external body node through a body tie resistor. If `B` is not given and `P` is given, the internal body node is not accessible from the netlist, but is still tied to the external body contact through the tie resistance.

  If there are only six nodes specified and `TNODEOUT` is also specified, the sixth node is the temperature node instead.

`temperature node`
: If the parameter `TNODEOUT` is specified, the final node (fifth, sixth, or seventh) is interpreted as a temperature node. The temperature node is intended for thermal coupling simulation.

`BJTOFF`
: Turns off the parasitic BJT currents.

`IC` The `IC` parameter allows specification of the five junction initial conditions, $V_{ds}, V_{gs}, V_{bs}, V_{es}$ and V_{ps}. V_{ps} is ignored in a four-terminal device.

`RTH0`
: Thermal resistance per unit width. Taken from model card if not given.

`CTH0`
: Thermal capacitance per unit width. Taken from model card if not given.

`NBC` Number of body contact isolation edges.

`NSEG`
: Number of segments for channel width partitioning.

`PDBCP`
: Parasitic perimeter length for body contact at drain side.

`PSBCP`
: Parasitic perimeter length for body contact at source side.

`AGBCP`
: Parasitic gate-to-body overlap area for body contact.

`AEBCP`
: Parasitic body-to-substrate overlap area for body contact.

`VBSUSR`
: Optional initial value of VBS specified by user for use in transient analysis. (unused in **Xyce**).

`FRBODY`
: Layout-dependent body resistance coefficient.

Comments The simulator provides three MOSFET device models, which differ in the formulation of the I-V characteristic. The `LEVEL` parameter selects among different models as shown below.

For HSpice compatibility, the BSIM4 model can be specified with either level 14 or level 54.

MOSFET Operating Temperature

Model parameters may be assigned unique measurement temperatures using the $\mathbf{TNOM}$ model parameter. See the MOSFET model parameters for more information.

MOSFET Power Calculations

Power dissipated in the transistor is calculated with $I_D * V_{DS} + I_G * V_{GS}$ where I_D is the drain current, I_G is the gate current, V_{DS} is the voltage drop between the drain and the source and V_{GS} is the voltage drop between the gate and the source. This formula may differ from other simulators, such as HSpice and PSpice.

Internal Device Variables Accessible with `N()` Syntax

For the BSIM3 and BSIM4 models, several internal variables have been made accessible with the `N()` syntax on a `.PRINT` line. They are g_m (tranconductance), V_{th}, V_{ds}, V_{gs}, V_{bs}, and V_{dsat}. An example `.PRINT` line command for a MOSFET device named `m1` would be:

```
.print dc N(m1:gm) N(m1:Vth) N(m1:Vdsat) N(m1:Vds) N(m1:Vgs) N(m1:Vbs)
```

If the user runs `Xyce -namesfile <filename> <netlist>` then **Xyce** will output into the first filename a list of all solution variables generated by that netlist. This can be useful for determining the "fully-qualified" device name, needed for the `N()` syntax, if the device is in a subcircuit.

Instance Parameters

Tables 2.71, 2.73, 2.75, 2.77, 2.79 and 2.81 give the available instance parameters for the levels 1,2,3,6,9 and 10 MOSFETs, respectively.

In addition to the parameters shown in the tables, where a list of numbered initial condition parameters are shown, the MOSFETs support a vector parameter for the initial conditions. `IC1` and `IC2` may therefore be specified compactly as `IC=<ic1>,<ic2>`.

Model Parameters

Tables 2.72, 2.74, 2.76, 2.78, 2.80, and 2.82 give the available model parameters for the levels 1,2,3,6,9 and 10 MOSFETs, respectively.

For a thorough description of MOSFET models see [13, 14, 15, 16, 17, 18, 19, 20, 21, 22].

All MOSFET models

The parameters shared by all MOSFET model levels are principally parasitic element values (e.g., series resistance, overlap capacitance, etc.).

Model levels 1 and 3

The DC behaviors of the level 1 and 3 MOSFET models are defined by the parameters $\mathbf{VTO}$, $\mathbf{KP}$, $\mathbf{LAMBDA}$, $\mathbf{PHI}$, and $\mathbf{GAMMA}$. The simulator calculates these if the process parameters (e.g., $\mathbf{TOX}$, and $\mathbf{NSUB}$) are specified, but these are always overridden by any user-defined values. The $\mathbf{VTO}$ value is positive (negative) for modeling the enhancement mode and negative (positive) for the depletion mode of N-channel (P-channel) devices.

For MOSFETs, the capacitance model enforces charge conservation, influencing just the Level 1 and 3 models.

Effective device parameter lengths and widths are calculated as follows:

$$P_i = P_0 + P_L/L_e + P_W/W_e$$

where

$$\begin{array}{rclcl} L_e & = & \text{effective length} & = & \mathbf{L} - (2 \cdot \mathbf{LD}) \\ W_e & = & \text{effective width} & = & \mathbf{W} - (2 \cdot \mathbf{WD}) \end{array}$$

See $\mathbf{.MODEL}$ (model definition) for more information.

Model level 9 (BSIM3 version 3.2.2)

The University of California, Berkeley BSIM3 model is a physical-based model with a large number of dependencies on essential dimensional and processing parameters. It incorporates the key effects that are critical in modeling deep-submicrometer MOSFETs. These include threshold voltage reduction, nonuniform doping, mobility reduction due to the vertical field, bulk charge effect, carrier velocity saturation, drain-induced barrier lowering (DIBL), channel length modulation (CLM), hot-carrier-induced output resistance reduction, subthreshold conduction, source/drain parasitic resistance, substrate current induced body effect (SCBE) and drain voltage reduction in LDD structure.

The BSIM3 Version 3.2.2 model is a deep submicron MOSFET model with several major enhancements over earlier versions. These include a single I-V formula used to define the current and output conductance for operating regions, improved narrow width device modeling, a superior capacitance model with improved short and narrow geometry models, a new relaxation-time model to better transient modeling and enhanced model fitting of assorted W/L ratios using a single parameter set. This version preserves the large number of integrated dependencies on dimensional and processing parameters of the Version 2 model. For further information, see Reference [14].

Additional notes

1. If any of the following BSIM3 3.2.2 model parameters are not specified, they are computed via the following:

   If $\mathbf{VTHO}$ is not specified, then:

   $$\mathbf{VTHO} = \mathbf{VFB} + \phi_s \mathbf{K1}\sqrt{\phi_s}$$

   where:

   $$\mathbf{VFB} = -1.0$$

   If $\mathbf{VTHO}$ is given, then:

   $$\begin{aligned} \mathbf{VFB} &= \mathbf{VTHO} - \phi_s + \mathbf{K1}\sqrt{phi_s} \\ \mathbf{VBX} &= \phi_s - \frac{q \cdot \mathbf{NCH} \cdot \mathbf{XT}^2}{2\varepsilon_{si}} \\ \mathbf{CF} &= \left(\frac{2\varepsilon_{ox}}{\pi}\right) \ln\left(1 + \frac{1}{4 \times 10^7 \cdot \mathbf{TOX}}\right) \end{aligned}$$

   where:

   $E_g(T) =$ the energy bandgap at temperature $T = 1.16 - \dfrac{T^2}{7.02 \times 10^4 (T + 1108)}$

2. If $\mathbf{K1}$ and $\mathbf{K2}$ are not given then they are computed via the following:

   $$\begin{aligned} \mathbf{K1} &= \mathbf{GAMMA2} - 2 \cdot \mathbf{K2}\sqrt{\phi_s - \mathbf{VBM}} \\ \mathbf{K2} &= \frac{(\mathbf{GAMMA1} - \mathbf{GAMMA2})(\sqrt{\phi_s - \mathbf{VBX}} - \sqrt{\phi_s})}{2\sqrt{\phi_s}(\sqrt{\phi_s - \mathbf{VBM}} - \sqrt{\phi_s}) + \mathbf{VBM}} \end{aligned}$$

   where:

   $$\begin{aligned} \phi_s &= 2V_t \ln\left(\frac{\mathbf{NCH}}{n_i}\right) \\ V_t &= kT/q \\ n_i &= 1.45 \times 10^{10} \left(\frac{T}{300.15}\right)^{1.5} \exp\left(21.5565981 - \frac{E_g(T)}{2V_t}\right) \end{aligned}$$

3. If $\mathbf{NCH}$ is not specified and $\mathbf{GAMMA1}$ is, then:

$$\mathbf{NCH} = \frac{\mathbf{GAMMA1^2} \times \mathbf{COX^2}}{2q\varepsilon_{si}}$$

If $\mathbf{GAMMA1}$ and $\mathbf{NCH}$ *are not* specified, then $\mathbf{NCH}$ defaults to $1.7 \times 10^{23}\ m^{-3}$ and $\mathbf{GAMMA1}$ is computed using $\mathbf{NCH}$:

$$\mathbf{GAMMA1} = \frac{\sqrt{2q\varepsilon_{si} \cdot \mathbf{NCH}}}{\mathbf{COX}}$$

If $\mathbf{GAMMA2}$ is not specified, then:

$$\mathbf{GAMMA2} = \frac{\sqrt{2q\varepsilon_{si} \cdot \mathbf{NSUB}}}{\mathbf{COX}}$$

4. If $\mathbf{CGSO}$ is not specified and $\mathbf{DLC} > 0$, then:

$$\mathbf{CGSO} = \begin{cases} 0, & ((\mathbf{DLC} \cdot \mathbf{COX}) - \mathbf{CGSL}) < 0 \\ 0.6 \cdot \mathbf{XJ} \cdot \mathbf{COX}, & ((\mathbf{DLC} \cdot \mathbf{COX}) - \mathbf{CGSL}) \geq 0 \end{cases}$$

5. If $\mathbf{CGDO}$ is not specified and $\mathbf{DLC} > 0$, then:

$$\mathbf{CGDO} = \begin{cases} 0, & ((\mathbf{DLC} \cdot \mathbf{COX}) - \mathbf{CGSL}) < 0 \\ 0.6 \cdot \mathbf{XJ} \cdot \mathbf{COX}, & ((\mathbf{DLC} \cdot \mathbf{COX}) - \mathbf{CGSL}) \geq 0 \end{cases}$$

Model level 10 (BSIMSOI version 3.2)

The BSIMSOI is an international standard model for SOI (silicon on insulator) circuit design and is formulated on top of the BSIM3v3 framework. A detailed description can be found in the BSIMSOI 3.1 User's Manual [23] and the BSIMSOI 3.2 release notes [24].

This version (v3.2) of the BSIMSOI includes three depletion models; the partially depleted BSIMSOI PD (soiMod=0), the fully depleted BSIMSOI FD (soiMod=2), and the unified SOI model (soiMod=1).

BSIMPD is the Partial-Depletion (PD) mode of the BSIMSOI. A typical PD SOI MOSFET is formed on a thin SOI film which is layered on top of a buried oxide. BSIMPD has the following features and enhancements:

- Real floating body simulation of both I-V and C-V. The body potential is determined by the balance of all body current components.
- An improved parasitic bipolar current model. This includes enhancements in the various diode leakage components, second order effects (high-level injection and Early effect), diffusion charge equation, and temperature dependence of the diode junction capacitance.
- An improved impact-ionization current model. The contribution from BJT current is also modeled by the parameter Fbjtii.

- A gate-to-body tunneling current model, which is important to thin-oxide SOI technologies.
- Enhancements in the threshold voltage and bulk charge formulation of the high positive body bias regime.
- Instance parameters (Pdbcp, Psbcp, Agbcp, Aebcp, Nbc) are provided to model the parasitics of devices with various body-contact and isolation structures.
- An external body node (the 6th node) and other improvements are introduced to facilitate the modeling of distributed body resistance.
- Self heating. An external temperature node (the 7th node) is supported to facilitate the simulation of thermal coupling among neighboring devices.
- A unique SOI low frequency noise model, including a new excess noise resulting from the floating body effect.
- Width dependence of the body effect is modeled by parameters (K1,K1w1,K1w2).
- Improved history dependence of the body charges with two new parameters (Fbody, DLCB).
- An instance parameter Vbsusr is provided for users to set the transient initial condition of the body potential.
- The new charge-thickness capacitance model introduced in BSIM3v3.2, `capMod=3`, is included.

Quadratic Temperature Compensation

SPICE temperature effects are the default, but MOSFET levels 18, 19 and 20 have a more advanced temperature compensation available. By specifying `TEMPMODEL=QUADRATIC` in the netlist, parameters can be interpolated quadratically between measured values extracted from data. See Section 2.1.14 for more details.

MOSFET Equations

The following equations define an N-channel MOSFET. The P-channel devices use a reverse the sign for all voltages and currents. The equations use the following variables:

$$
\begin{aligned}
V_{bs} &= \text{intrinsic substrate-intrinsic source voltage} \\
V_{bd} &= \text{intrinsic substrate-intrinsic drain voltage} \\
V_{ds} &= \text{intrinsic drain-substrate source voltage} \\
V_{dsat} &= \text{saturation voltage} \\
V_{gs} &= \text{intrinsic gate-intrinsic source voltage} \\
V_{gd} &= \text{intrinsic gate-intrinsic drain voltage} \\
V_t &= kT/q \text{ (thermal voltage)} \\
V_{th} &= \text{threshold voltage} \\
C_{ox} &= \text{the gate oxide capacitance per unit area}
\end{aligned}
$$

$$
\begin{aligned}
f &= \text{noise frequency} \\
k &= \text{Boltzmann's constant} \\
q &= \text{electron charge} \\
Leff &= \text{effective channel length} \\
Weff &= \text{effective channel width} \\
T &= \text{analysis temperature (K)} \\
T_0 &= \text{nominal temperature (set using TNOM option)}
\end{aligned}
$$

Other variables are listed in the BJT Equations section 2.3.16.

All Levels

$$
\begin{aligned}
I_g &= \text{gate current} = 0 \\
I_b &= \text{bulk current} = I_{bs} + I_{bd} \\
\text{where} & \\
I_{bs} &= \text{bulk-source leakage current} = I_{ss}\left(e^{V_{bs}/(NV_t)} - 1\right) \\
I_{ds} &= \text{bulk-drain leakage current} = I_{ds}\left(e^{V_{bd}/(NV_t)} - 1\right) \\
\text{where} & \\
\mathit{if} & \\
& \mathbf{JS} = 0, \text{ or } \mathbf{AS} = 0 \text{ or } \mathbf{AD} = 0 \\
\mathit{then} & \\
& I_{ss} = \mathbf{IS} \\
& I_{ds} = \mathbf{IS} \\
\mathit{else} & \\
& I_{ss} = \mathrm{AS} \times \mathbf{JS} + \mathrm{PS} \times \mathbf{JSSW} \\
& I_{ds} = \mathrm{AD} \times \mathbf{JS} + \mathrm{PD} \times \mathbf{JSSW} \\
& I_d = \text{drain current} = I_{drain} - I_{bd} \\
& I_s = \text{source current} = -I_{drain} - I_{bs}
\end{aligned}
$$

Level 1: Idrain

Normal Mode: $V_{ds} > 0$

Case 1

For cutoff region: $V_{gs} - V_{to} < 0$

$$I_{drain} = 0$$

Case 2

For linear region: $V_{ds} < V_{gs} - V_{to}$

$$I_{drain} = (W/L)(\mathbf{KN}/2)(1 + \mathbf{LAMBDA} \times V_{ds})V_{ds}(2(V_{gs} - V_{to}) - V_{ds})$$

Case 3

For saturation region: $0 \leq V_{gs} - V_{to} \leq V_{ds}$

$$I_{drain} = (W/L)(\mathbf{KN}/2)(1 + \mathbf{LAMBDA} \cdot V_{ds})(V_{gs} - V_{to})^2$$

where

$$V_{to} = \mathbf{VTO} + \mathbf{GAMMA} \cdot \left((\mathbf{PHI} - V_{bs})^{1/2}\right)^{1/2}$$

Inverted Mode: $V_{ds} < 0$

Here, simply switch the source and drain in the normal mode equations given above.

Level 3: Idrain

See Reference [17] below for detailed information.

Capacitance

Level 1 and 3

$$C_{bs} = \text{bulk-source capacitance} = \text{area cap.} + \text{sidewall cap.} + \text{transit time cap.}$$

$$C_{bd} = \text{bulk-drain capacitance} = \text{area cap.} + \text{sidewall cap.} + \text{transit time cap.}$$

if

CBS = 0 and **CBD** = 0

then

$$C_{bs} = \mathrm{AS} \cdot \mathbf{CJ} \cdot C_{bsj} + \mathrm{PS} \cdot \mathbf{CJSW} \cdot C_{bss} + \mathbf{TT} \cdot G_{bs}$$
$$C_{bd} = \mathrm{AD} \cdot \mathbf{CJ} \cdot C_{bdj} + \mathrm{PD} \cdot \mathbf{CJSW} \cdot C_{bds} + \mathbf{TT} \cdot G_{ds}$$

else

$$C_{bs} = \mathrm{CBS} \cdot C_{bsj} + \mathrm{PS} \cdot \mathbf{CJSW} \cdot C_{bss} + \mathbf{TT} \cdot G_{bs}$$
$$C_{bd} = \mathrm{CBD} \cdot C_{bdj} + \mathrm{PD} \cdot \mathbf{CJSW} \cdot C_{bds} + \mathbf{TT} \cdot G_{ds}$$

where

$$G_{bs} = \text{DC bulk-source conductance} = dI_{bs}/dV_{bs}$$
$$G_{bd} = \text{DC bulk-drain conductance} = dI_{bd}/dV_{bd}$$

if

$$V_{bs} \leq \mathbf{FC} \cdot \mathbf{PB}$$

then

$$C_{bsj} = (1 - V_{bs}/\mathbf{PB})^{-\mathbf{MJ}}$$
$$C_{bss} = (1 - V_{bs}/\mathbf{PBSW})^{-\mathbf{MJSW}}$$

if

$$V_{bs} > \mathbf{FC} \cdot \mathbf{PB}$$

then

$$C_{bsj} = (1 - \mathbf{FC})^{-(1+\mathbf{MJ})}(1 - \mathbf{FC}(1 + \mathbf{MJ}) + \mathbf{MJ} \cdot V_{bs}/\mathbf{PB})$$
$$C_{bss} = (1 - \mathbf{FC})^{-(1+\mathbf{MJSW})}(1 - \mathbf{FC}(1 + \mathbf{MJSW}) + \mathbf{MJSW} \cdot V_{bs}/\mathbf{PBSW})$$

if

$$V_{bd} \leq \mathbf{FC} \cdot \mathbf{PB}$$

then

$$C_{bdj} = (1 - V_{bd}/\mathbf{PB})^{-\mathbf{MJ}}$$
$$C_{bds} = (1 - V_{bd}/\mathbf{PBSW})^{-\mathbf{MJSW}}$$

if

$$V_{bd} > \mathbf{FC} \cdot \mathbf{PB}$$

then

$$C_{bdj} = (1 - \mathbf{FC})^{-(1+\mathbf{MJ})}(1 - \mathbf{FC}(1 + \mathbf{MJ}) + \mathbf{MJ} \cdot V_{bd}/\mathbf{PB})$$
$$C_{bds} = (1 - \mathbf{FC})^{-(1+\mathbf{MJSW})}(1 - \mathbf{FC}(1 + \mathbf{MJSW}))$$

$$C_{gs} = \text{gate-source overlap capacitance} = \mathbf{CGSO} \cdot \mathbf{W}$$
$$C_{gd} = \text{gate-drain overlap capacitance} = \mathbf{CGDO} \cdot \mathbf{W}$$
$$C_{gb} = \text{gate-bulk overlap capacitance} = \mathbf{CGBO} \cdot \mathbf{L}$$

All Levels

$$\mathbf{IS}(T) = \mathbf{IS} \cdot \exp\left(E_g(T_0) \cdot T/T_0 - E_g(T)\right)/V_t$$
$$\mathbf{JS}(T) = \mathbf{JS} \cdot \exp\left(E_g(T_0) \cdot T/T_0 - E_g(T)\right)/V_t$$
$$\mathbf{JSSW}(T) = \mathbf{JSSW} \cdot \exp\left(E_g(T_0) \cdot T/T_0 - E_g(T)\right)/V_t$$
$$\mathbf{PB}(T) = \mathbf{PB} \cdot T/T_0 - 3V_t \ln(T/T_0) - E_g(T_0) \cdot T/T_0 + E_g T$$
$$\mathbf{PBSW}(T) = \mathbf{PBSW} \cdot T/T_0 - 3V_t \ln(T/T_0) - E_g(T_0) \cdot T/T_0 + E_g T$$
$$\mathbf{PHI}(T) = \mathbf{PHI} \cdot T/T_0 - 3V_t \ln(T/T_0) - E_g(T_0) \cdot T/T_0 + E_g T$$

where

$$E_g(T) = \text{silicon bandgap energy} = 1.16 - 0.000702T^2/(T + 1108)$$
$$\mathbf{CBD}(T) = \mathbf{CBD} \cdot (1 + \mathbf{MJ} \cdot (0.0004(T - T_0) + (1 - \mathbf{PB}(T)/\mathbf{PB})))$$
$$\mathbf{CBS}(T) = \mathbf{CBS} \cdot (1 + \mathbf{MJ} \cdot (0.0004(T - T_0) + (1 - \mathbf{PB}(T)/\mathbf{PB})))$$
$$\mathbf{CJ}(T) = \mathbf{CJ} \cdot (1 + \mathbf{MJ} \cdot (0.0004(T - T_0) + (1 - \mathbf{PB}(T)/\mathbf{PB})))$$
$$\mathbf{CJSW}(T) = \mathbf{CJSW} \cdot (1 + \mathbf{MJSW} \cdot (0.0004(T - T_0) + (1 - \mathbf{PB}(T)/\mathbf{PB})))$$
$$\mathbf{KP}(T) = \mathbf{KP} \cdot (T/T_0)^{-3/2}$$
$$\mathbf{UO}(T) = \mathbf{UO} \cdot (T/T_0)^{-3/2}$$
$$\mathbf{MUS}(T) = \mathbf{MUS} \cdot (T/T_0)^{-3/2}$$
$$\mathbf{MUZ}(T) = \mathbf{MUZ} \cdot (T/T_0)^{-3/2}$$
$$\mathbf{X3MS}(T) = \mathbf{X3MS} \cdot (T/T_0)^{-3/2}$$

Level 1 MOSFET Tables (SPICE Level 1)

Table 2.71: MOSFET level 1 Device Instance Parameters

Parameter	Description	Units	Default
AD	Drain diffusion area	m^2	0
AS	Source diffusion area	m^2	0
IC1	Initial condition on Drain-Source voltage	V	0
IC2	Initial condition on Gate-Source voltage	V	0
IC3	Initial condition on Bulk-Source voltage	V	0
L	Channel length	m	0
M	Multiplier for M devices connected in parallel	–	1
NRD	Multiplier for RSH to yield parasitic resistance of drain	□	1
NRS	Multiplier for RSH to yield parasitic resistance of source	□	1
OFF	Initial condition of no voltage drops across device	logical (T/F)	false
PD	Drain diffusion perimeter	m	0
PS	Source diffusion perimeter	m	0
TEMP	Device temperature	°C	Ambient Temperature
W	Channel width	m	0

Table 2.72: MOSFET level 1 Device Model Parameters

Parameter	Description	Units	Default
AF	Flicker noise exponent	–	1
CBD	Zero-bias bulk-drain p-n capacitance	F	0
CBS	Zero-bias bulk-source p-n capacitance	F	0
CGBO	Gate-bulk overlap capacitance/channel length	F/m	0
CGDO	Gate-drain overlap capacitance/channel width	F/m	0
CGSO	Gate-source overlap capacitance/channel width	F/m	0
CJ	Bulk p-n zero-bias bottom capacitance/area	F/m^2	0
CJSW	Bulk p-n zero-bias sidewall capacitance/area	F/m^2	0
FC	Bulk p-n forward-bias capacitance coefficient	–	0.5
GAMMA	Bulk threshold parameter	$V^{1/2}$	0
IS	Bulk p-n saturation current	A	1e-14
JS	Bulk p-n saturation current density	A/m^2	0

Table 2.72: MOSFET level 1 Device Model Parameters

Parameter	Description	Units	Default
KF	Flicker noise coefficient	–	0
KP	Transconductance coefficient	A/V^2	2e-05
L	Default channel length	m	0.0001
LAMBDA	Channel-length modulation	V^{-1}	0
LD	Lateral diffusion length	m	0
MJ	Bulk p-n bottom grading coefficient	–	0.5
MJSW	Bulk p-n sidewall grading coefficient	–	0.5
NSS	Surface state density	cm^{-2}	0
NSUB	Substrate doping density	cm^{-3}	0
PB	Bulk p-n bottom potential	V	0.8
PHI	Surface potential	V	0.6
RD	Drain ohmic resistance	Ω	0
RS	Source ohmic resistance	Ω	0
RSH	Drain,source diffusion sheet resistance	Ω	0
TEMPMODEL	Specifies the type of parameter interpolation over temperature	–	'NONE'
TNOM	Nominal device temperature	°C	27
TOX	Gate oxide thickness	m	1e-07
TPG	Gate material type (-1 = same as substrate) 0 = aluminum,1 = opposite of substrate)	–	0
UO	Surface mobility	$1/(Vcm^2s)$	600
UO	Surface mobility	$1/(Vcm^2s)$	600
VTO	Zero-bias threshold voltage	V	0
W	Default channel width	m	0.0001

Level 2 MOSFET Tables (SPICE Level 2)

Table 2.73: MOSFET level 2 Device Instance Parameters

Parameter	Description	Units	Default
AD	Drain diffusion area	m^2	0
AS	Source diffusion area	m^2	0
IC1	Initial condition on Drain-Source voltage	V	0
IC2	Initial condition on Gate-Source voltage	V	0
IC3	Initial condition on Bulk-Source voltage	V	0
L	Channel length	m	0
M	Multiplier for M devices connected in parallel	–	1
NRD	Multiplier for RSH to yield parasitic resistance of drain	□	1
NRS	Multiplier for RSH to yield parasitic resistance of source	□	1
OFF	Initial condition of no voltage drops across device	logical (T/F)	false
PD	Drain diffusion perimeter	m	0
PS	Source diffusion perimeter	m	0
TEMP	Device temperature	°C	Ambient Temperature
W	Channel width	m	0

Table 2.74: MOSFET level 2 Device Model Parameters

Parameter	Description	Units	Default
AF	Flicker noise exponent	–	1
CBD	Zero-bias bulk-drain p-n capacitance	F	0
CBS	Zero-bias bulk-source p-n capacitance	F	0
CGBO	Gate-bulk overlap capacitance/channel length	F/m	0
CGDO	Gate-drain overlap capacitance/channel width	F/m	0
CGSO	Gate-source overlap capacitance/channel width	F/m	0
CJ	Bulk p-n zero-bias bottom capacitance/area	F/m^2	0
CJSW	Bulk p-n zero-bias sidewall capacitance/area	F/m^2	0
DELTA	Width effect on threshold	–	0
FC	Bulk p-n forward-bias capacitance coefficient	–	0.5
GAMMA	Bulk threshold parameter	$V^{1/2}$	0
IS	Bulk p-n saturation current	A	1e-14

Table 2.74: MOSFET level 2 Device Model Parameters

Parameter	Description	Units	Default
JS	Bulk p-n saturation current density	A/m^2	0
KF	Flicker noise coefficient	–	0
KP	Transconductance coefficient	A/V^2	2e-05
L	Default channel length	m	0.0001
LAMBDA	Channel-length modulation	V^{-1}	0
LD	Lateral diffusion length	m	0
MJ	Bulk p-n bottom grading coefficient	–	0.5
MJSW	Bulk p-n sidewall grading coefficient	–	0.5
NEFF	Total channel charge coeff.	–	1
NFS	Fast surface state density	–	0
NSS	Surface state density	cm^{-2}	0
NSUB	Substrate doping density	cm^{-3}	0
PB	Bulk p-n bottom potential	V	0.8
PHI	Surface potential	V	0.6
RD	Drain ohmic resistance	Ω	0
RS	Source ohmic resistance	Ω	0
RSH	Drain,source diffusion sheet resistance	Ω	0
TEMPMODEL	Specifies the type of parameter interpolation over temperature	–	'NONE'
TNOM	Nominal device temperature	°C	27
TOX	Gate oxide thickness	m	1e-07
TPG	Gate material type (-1 = same as substrate, 0 = aluminum,1 = opposite of substrate)	–	0
UO	Surface mobility	$1/(Vcm^2s)$	600
UCRIT	Crit. field for mob. degradation	–	10000
UEXP	Crit. field exp for mob. deg.	–	0
UO	Surface mobility	$1/(Vcm^2s)$	600
VMAX	Maximum carrier drift velocity	–	0
VTO	Zero-bias threshold voltage	V	0
W	Default channel width	m	0.0001
XJ	Junction depth	–	0

Level 3 MOSFET Tables (SPICE Level 3)

Table 2.75: MOSFET level 3 Device Instance Parameters

Parameter	Description	Units	Default
AD	Drain diffusion area	m^2	0
AS	Source diffusion area	m^2	0
IC1	Initial condition on Drain-Source voltage	V	0
IC2	Initial condition on Gate-Source voltage	V	0
IC3	Initial condition on Bulk-Source voltage	V	0
L	Channel length	m	0
M	Multiplier for M devices connected in parallel	–	1
NRD	Multiplier for RSH to yield parasitic resistance of drain	□	1
NRS	Multiplier for RSH to yield parasitic resistance of source	□	1
OFF	Initial condition of no voltage drops across device	logical (T/F)	false
PD	Drain diffusion perimeter	m	0
PS	Source diffusion perimeter	m	0
TEMP	Device temperature	°C	Ambient Temperature
W	Channel width	m	0

Table 2.76: MOSFET level 3 Device Model Parameters

Parameter	Description	Units	Default
AF	Flicker noise exponent	–	1
CBD	Zero-bias bulk-drain p-n capacitance	F	0
CBS	Zero-bias bulk-source p-n capacitance	F	0
CGBO	Gate-bulk overlap capacitance/channel length	F/m	0
CGDO	Gate-drain overlap capacitance/channel width	F/m	0
CGSO	Gate-source overlap capacitance/channel width	F/m	0
CJ	Bulk p-n zero-bias bottom capacitance/area	F/m^2	0
CJSW	Bulk p-n zero-bias sidewall capacitance/area	F/m^2	0
DELTA	Width effect on threshold	–	0
ETA	Static feedback	–	0
FC	Bulk p-n forward-bias capacitance coefficient	–	0.5
GAMMA	Bulk threshold parameter	$V^{1/2}$	0

Table 2.76: MOSFET level 3 Device Model Parameters

Parameter	Description	Units	Default
IS	Bulk p-n saturation current	A	1e-14
JS	Bulk p-n saturation current density	A/m^2	0
KAPPA	Saturation field factor	–	0.2
KF	Flicker noise coefficient	–	0
KP	Transconductance coefficient	A/V^2	2e-05
L	Default channel length	m	0.0001
LD	Lateral diffusion length	m	0
MJ	Bulk p-n bottom grading coefficient	–	0.5
MJSW	Bulk p-n sidewall grading coefficient	–	0.33
NFS	Fast surface state density	cm^{-2}	0
NSS	Surface state density	cm^{-2}	0
NSUB	Substrate doping density	cm^{-3}	0
PB	Bulk p-n bottom potential	V	0.8
PHI	Surface potential	V	0.6
RD	Drain ohmic resistance	Ω	0
RS	Source ohmic resistance	Ω	0
RSH	Drain,source diffusion sheet resistance	Ω	0
TEMPMODEL	Specifies the type of parameter interpolation over temperature	–	'NONE'
THETA	Mobility modulation	V^{-1}	0
TNOM	Nominal device temperature	°C	27
TOX	Gate oxide thickness	m	1e-07
TPG	Gate material type (-1 = same as substrate,0 = aluminum,1 = opposite of substrate)	–	1
UO	Surface mobility	$1/(Vcm^2s)$	600
UO	Surface mobility	$1/(Vcm^2s)$	600
VMAX	Maximum drift velocity	m/s	0
VTO	Zero-bias threshold voltage	V	0
W	Default channel width	m	0.0001
XJ	Metallurgical junction depth	m	0

Level 6 MOSFET Tables (SPICE Level 6)

Table 2.77: MOSFET level 6 Device Instance Parameters

Parameter	Description	Units	Default
AD	Drain diffusion area	m^2	0
AS	Source diffusion area	m^2	0
IC1	Initial condition on Drain-Source voltage	V	0
IC2	Initial condition on Gate-Source voltage	V	0
IC3	Initial condition on Bulk-Source voltage	V	0
L	Channel length	m	0
M	Multiplier for M devices connected in parallel	–	1
NRD	Multiplier for RSH to yield parasitic resistance of drain	□	1
NRS	Multiplier for RSH to yield parasitic resistance of source	□	1
OFF	Initial condition of no voltage drops across device	logical (T/F)	false
PD	Drain diffusion perimeter	m	0
PS	Source diffusion perimeter	m	0
TEMP	Device temperature	°C	Ambient Temperature
W	Channel width	m	0

Table 2.78: MOSFET level 6 Device Model Parameters

Parameter	Description	Units	Default
AF	Flicker noise exponent	–	1
CBD	Zero-bias bulk-drain p-n capacitance	F	0
CBS	Zero-bias bulk-source p-n capacitance	F	0
CGBO	Gate-bulk overlap capacitance/channel length	F/m	0
CGDO	Gate-drain overlap capacitance/channel width	F/m	0
CGSO	Gate-source overlap capacitance/channel width	F/m	0
CJ	Bulk p-n zero-bias bottom capacitance/area	F/m^2	0
CJSW	Bulk p-n zero-bias sidewall capacitance/area	F/m^2	0
FC	Bulk p-n forward-bias capacitance coefficient	–	0.5
GAMMA	Bulk threshold parameter	–	0
GAMMA1	Bulk threshold parameter 1	–	0
IS	Bulk p-n saturation current	A	1e-14

Table 2.78: MOSFET level 6 Device Model Parameters

Parameter	Description	Units	Default
JS	Bulk p-n saturation current density	A/m^2	0
KC	Saturation current factor	–	5e-05
KF	Flicker noise coefficient	–	0
KV	Saturation voltage factor	–	2
LAMBDA	Channel length modulation param.	–	0
LAMBDA0	Channel length modulation param. 0	–	0
LAMBDA1	Channel length modulation param. 1	–	0
LD	Lateral diffusion length	m	0
MJ	Bulk p-n bottom grading coefficient	–	0.5
MJSW	Bulk p-n sidewall grading coefficient	–	0.5
NC	Saturation current coeff.	–	1
NSS	Surface state density	cm^{-2}	0
NSUB	Substrate doping density	cm^{-3}	0
NV	Saturation voltage coeff.	–	0.5
NVTH	Threshold voltage coeff.	–	0.5
PB	Bulk p-n bottom potential	V	0.8
PHI	Surface potential	V	0.6
PS	Sat. current modification par.	–	0
RD	Drain ohmic resistance	Ω	0
RS	Source ohmic resistance	Ω	0
RSH	Drain,source diffusion sheet resistance	Ω	0
SIGMA	Static feedback effect par.	–	0
TEMPMODEL	Specifies the type of parameter interpolation over temperature	–	'NONE'
TNOM	Nominal device temperature	°C	27
TOX	Gate oxide thickness	m	1e-07
TPG	Gate material type (-1 = same as substrate,0 = aluminum,1 = opposite of substrate)	–	1
UO	Surface mobility	$1/(Vcm^2s)$	600
UO	Surface mobility	$1/(Vcm^2s)$	600
VTO	Zero-bias threshold voltage	V	0

Level 9 MOSFET Tables (BSIM3)

For complete documentation of the BSIM3 model, see the users' manual for the BSIM3, available for download at `http://bsim.berkeley.edu/models/bsim4/bsim3/`. **Xyce** implements Version 3.2.2 of the BSIM3.

In addition to the parameters shown in table 2.79, the BSIM3 supports a vector parameter for the initial conditions. `IC1` through `IC3` may therefore be specified compactly as `IC=<ic1>,<ic2>,<ic3>`.

NOTE: Many BSIM3 parameters listed in tables 2.79 and 2.80 as having default values of zero are actually replaced with internally computed defaults if not given. Specifying zero in your model card will override this internal computation. It is recommended that you only set model parameters that you are actually changing from defaults and that you not generate model cards containing default values from the tables.

Table 2.79: BSIM3 Device Instance Parameters

Parameter	Description	Units	Default
	Control Parameters		
`M`	Multiplier for M devices connected in parallel	–	1
`NQSMOD`	Flag for NQS model	–	0
	Geometry Parameters		
`AD`	Drain diffusion area	m^2	0
`AS`	Source diffusion area	m^2	0
`L`	Channel length	m	0
`NRD`	Multiplier for RSH to yield parasitic resistance of drain	□	1
`NRS`	Multiplier for RSH to yield parasitic resistance of source	□	1
`PD`	Drain diffusion perimeter	m	0
`PS`	Source diffusion perimeter	m	0
`W`	Channel width	m	0
	Temperature Parameters		
`TEMP`	Device temperature	°C	Ambient Tempera-ture
	Voltage Parameters		
`IC1`	Initial condition on Vds	V	0
`IC2`	Initial condition on Vgs	V	0
`IC3`	Initial condition on Vbs	V	0
`OFF`	Initial condition of no voltage drops accross device	logical (T/F)	false

Table 2.80: BSIM3 Device Model Parameters

Parameter	Description	Units	Default
	Bin Parameters		
LMAX	Maximum channel length	m	1
LMIN	Minimum channel length	m	0
WMAX	Maximum channel width	m	1
WMIN	Minimum channel width	m	0
	Capacitance Parameters		
ACDE	Exponetial coefficient for charge thickness in capmod = 3 for accumulation and depletion regions	m/V	1
CF	Firing field capacitance	F/m	0
CGBO	Gate-bulk overlap capacitance per unit channel length	F/m	0
CGDL	Light-doped drain-gate region overlap capacitance	F/m	0
CGDO	Non-LLD region drain-gate overlap capacitance per unit channel length	F/m	0
CGSL	Light-doped source-gate region overlap capacitance	F/m	0
CGSO	Non-LLD region source-gate overlap capacitance per unit channel length	F/m	0
CJ	Bulk p-n zero-bias bottom capacitance/area	F/m^2	0.0005
CJSW	Bulk p-n zero-bias sidewall capacitance/area	F/m^2	5e-10
CJSWG	Source/grain gate sidewall junction capacitance per unit width	F/m	0
CKAPPA	Coefficient for lightly doped region overlap capacitance fireing field capacitance	F/m	0.6
CLC	Constant term for short-channel model	m	1e-07
CLE	Exponetial term for the short-channel model	–	0.6
DLC	Length offset fitting parameter from C-V	m	0
DWC	Width offset fitting parameter from C-V	m	0
MJSWG	Source/grain gate sidewall junction capacitance grading coeficient	–	0
MOIN	Coefficient for the gate-bias dependent surface potential	–	15
NOFF	CV parameter in Vgsteff,CV for weak to strong inversion	–	1
PBSW	Source/drain side junction built-in potential	V	1
PBSWG	Source/drain gate sidewall junction built-in potential	V	0

Table 2.80: BSIM3 Device Model Parameters

Parameter	Description	Units	Default
VFBCV	Flat-band voltage parameter (for CAPMOD = 0 only)	V	-1
VOFFCV	CV parameter in Vgsteff,CV for weak to strong inversion	V	0
XPART	Charge partitioning rate flag	–	0
	Control Parameters		
BINUNIT	Binning unit selector	–	1
CAPMOD	Flag for capacitance models	–	3
MOBMOD	Mobility model selector	–	1
NOIMOD	Flag for noise models	–	1
PARAMCHK	Parameter value check	–	0
VERSION	Version number	–	'3.2.2'
	DC Parameters		
A0	Bulk charge effect coefficient for channel length	–	1
A1	First non-saturation effect parameter	V^{-1}	0
A2	Second non-saturation factor	–	1
AGS	Gate-bias coefficient of abulk	V^{-1}	0
ALPHA0	First parameter of impact-ionization current	m/V	0
ALPHA1	Isub parameter for length scaling	V^{-1}	0
B0	Bulk charge effect coefficient for channel width	m	0
B1	Bulk charge effect offset	m	0
BETA0	Second parameter of impact-ionization current	V	30
CDSC	Drain/source to channel coupling capacitance	F/m^2	0.00024
CDSCB	Body-bias sensitivity of CDSC	$F/(Vm^2)$	0
CDSCD	Drain-bias sensitivity of CDSC	$F/(Vm^2)$	0
CIT	Interface trap capacitance	F/m^2	0
DELTA	Effective Vds parameter	V	0.01
DROUT	L-depedance Coefficient of the DIBL correction parameter in Rout	–	0.56
DSUB	DIBL coefficient exponent in subthreshhold region	–	0
DVT0	First coefficient of short-channel effect effect on threshold voltage	–	2.2
DVT0W	First coefficient of narrow-width effect effect on threshold voltage for small channel length	m^{-1}	0
DVT1	Second coefficient of short-channel effect effect on threshold voltage	–	0.53

Table 2.80: BSIM3 Device Model Parameters

Parameter	Description	Units	Default
DVT1W	Second coefficient of narrow-width effect effect on threshold voltage for small channel length	m^{-1}	5.3e+06
DVT2	Body-bias coefficient of short-channel effect effect on threshold voltage	V^{-1}	-0.032
DVT2W	Body-bias coefficient of narrow-width effect effect on threshold voltage for small channel length	V^{-1}	-0.032
DWB	Coefficient of substrate body bias dependence of Weff	$m/V^{1/2}$	0
DWG	Coefficient of gate depedence of Weff	$m/V^{1/2}$	0
ETA0	DIBL coefficient in subthreshold region	–	0.08
ETAB	Body-bias coefficient for the subthreshold DIBL effect	V^{-1}	-0.07
IJTH	Diode limiting current	A	0.1
JSW	Sidewall saturation current per unit length	A/m	0
K1	First-order body effect coefficient	$V^{1/2}$	0
K2	second-order body effect coefficient	–	0
K3	Narrow width coefficient	–	80
K3B	Body effect coefficient of K3	V^{-1}	0
KETA	Body-bias coefficient of bulk charge effect	V^{-1}	-0.047
LINT	Length of offset fiting parameter from I-V without bias	m	0
LINTNOI	lint offset for noise calculation	m	0
NFACTOR	Subthreshold swing factor	–	1
NGATE	Poly gate doping concentration	cm^{-3}	0
NLX	Lateral non-uniform doping parameter	m	1.74e-07
PCLM	Channel length modulation parameter	–	1.3
PDIBLC1	First output resistance DIBL effect correction parameter	–	0.39
PDIBLC2	Second output resistance DIBL effect correction parameter	–	0.0086
PDIBLCB	Body effect coefficient of DIBL correction parameter	V^{-1}	0
PRWB	Body effect coefficient of RDSW	$V^{-1/2}$	0
PRWG	Gate-bias effect coefficient of RDSW	V^{-1}	0
PSCBE1	First substrate current body effect parameter	V/m	4.24e+08
PSCBE2	second substrate current body effect parameter	V/m	1e-05
PVAG	Gate dependence of early voltage	–	0
RDSW	Parasitic resistance per unit width	$\Omega\ \mu m$	0

Table 2.80: BSIM3 Device Model Parameters

Parameter	Description	Units	Default
UA	First-order mobility degradation coefficient	m/V	2.25e-09
UB	First-order mobility degradation coefficient	m^2/V^2	5.87e-19
UC	Body effect of mobility degridation coefficient	m/V^2	0
VBM	Maximum applied body-bias in threshold voltage calculation	V	-3
VFB	Flat-band voltage	V	0
VOFF	Offset voltage in the subthreshold region at large W and L	V	-0.08
VSAT	Saturation velocity at temp = TNOM	m/s	80000
VTH0	Threshold voltage at Vbs = 0 for large L	V	0
W0	Narrow-width paameter	m	2.5e-06
WINT	Width-offset fitting parameter from I-V without bias	m	0
WR	Width offset from Weff for Rds Calculation	–	1
Dependency Parameters			
LA0	Length dependence of A0	m	0
LA1	Length dependence of A1	m/V	0
LA2	Length dependence of A2	m	0
LACDE	Length dependence of ACDE	m^2/V	0
LAGS	Length dependence of AGS	m/V	0
LALPHA0	Length dependence of ALPHA0	m^2/V	0
LALPHA1	Length dependence of ALPHA1	m/V	0
LAT	Length dependence of AT	m^2/s	0
LB0	Length dependence of B0	m^2	0
LB1	Length dependence of B1	m^2	0
LBETA0	Length dependence of BETA0	Vm	0
LCDSC	Length dependence of CDSC	F/m	0
LCDSCB	Length dependence of CDSCB	F/(Vm)	0
LCDSCD	Length dependence of CDSCD	F/(Vm)	0
LCF	Length dependence of CF	F	0
LCGDL	Length dependence of CGDL	F	0
LCGSL	Length dependence of CGSL	F	0
LCIT	Length dependence of CIT	F/m	0
LCKAPPA	Length dependence of CKAPPA	F	0
LCLC	Length dependence of CLC	m^2	0
LCLE	Length dependence of CLE	m	0

Table 2.80: BSIM3 Device Model Parameters

Parameter	Description	Units	Default
LDELTA	Length dependence of DELTA	Vm	0
LDROUT	Length dependence of DROUT	m	0
LDSUB	Length dependence of DSUB	m	0
LDVT0	Length dependence of DVT0	m	0
LDVT0W	Length dependence of DVT0W	–	0
LDVT1	Length dependence of DVT1	m	0
LDVT1W	Length dependence of DVT1W	–	0
LDVT2	Length dependence of DVT2	m/V	0
LDVT2W	Length dependence of DVT2W	m/V	0
LDWB	Length dependence of DWB	$m^2/V^{1/2}$	0
LDWG	Length dependence of DWG	$m^2/V^{1/2}$	0
LELM	Length dependence of ELM	m	0
LETA0	Length dependence of ETA0	m	0
LETAB	Length dependence of ETAB	m/V	0
LGAMMA1	Length dependence of GAMMA1	$V^{1/2}m$	0
LGAMMA2	Length dependence of GAMMA2	$V^{1/2}m$	0
LK1	Length dependence of K1	$V^{1/2}m$	0
LK2	Length dependence of K2	m	0
LK3	Length dependence of K3	m	0
LK3B	Length dependence of K3B	m/V	0
LKETA	Length dependence of KETA	m/V	0
LKT1	Length dependence of KT1	Vm	0
LKT1L	Length dependence of KT1L	Vm^2	0
LKT2	Length dependence of KT2	m	0
LMOIN	Length dependence of MOIN	m	0
LNCH	Length dependence of NCH	m/cm^3	0
LNFACTOR	Length dependence of NFACTOR	m	0
LNGATE	Length dependence of NGATE	m/cm^3	0
LNLX	Length dependence of NLX	m^2	0
LNOFF	Length dependence of NOFF	m	0
LNSUB	Length dependence of NSUB	m/cm^3	0
LPCLM	Length dependence of PCLM	m	0
LPDIBLC1	Length dependence of PDIBLC1	m	0
LPDIBLC2	Length dependence of PDIBLC2	m	0
LPDIBLCB	Length dependence of PDIBLCB	m/V	0

Table 2.80: BSIM3 Device Model Parameters

Parameter	Description	Units	Default
LPRT	Length dependence of PRT	$\Omega\ \mu$m m	0
LPRWB	Length dependence of PRWB	m/V$^{1/2}$	0
LPRWG	Length dependence of PRWG	m/V	0
LPSCBE1	Length dependence of PSCBE1	V	0
LPSCBE2	Length dependence of PSCBE2	V	0
LPVAG	Length dependence of PVAG	m	0
LRDSW	Length dependence of RDSW	$\Omega\ \mu$m m	0
LU0	Length dependence of U0	m/(Vcm^{2}s)	0
LUA	Length dependence of UA	m^2/V	0
LUA1	Length dependence of UA1	m^2/V	0
LUB	Length dependence of UB	m^3/V^2	0
LUB1	Length dependence of UB1	m^3/V^2	0
LUC	Length dependence of UC	m^2/V^2	0
LUC1	Length dependence of UC1	m^2/($^\circ$CV^2)	0
LUTE	Length dependence of UTE	m	0
LVBM	Length dependence of VBM	Vm	0
LVBX	Length dependence of VBX	Vm	0
LVFB	Length dependence of VFB	Vm	0
LVFBCV	Length dependence of VFBCV	Vm	0
LVOFF	Length dependence of VOFF	Vm	0
LVOFFCV	Length dependence of VOFFCV	Vm	0
LVSAT	Length dependence of VSAT	m^2/s	0
LVTH0	Length dependence of VTH0	Vm	0
LW0	Length dependence of W0	m^2	0
LWR	Length dependence of WR	m	0
LXJ	Length dependence of XJ	m^2	0
LXT	Length dependence of XT	m^2	0
PA0	Cross-term dependence of A0	m	0
PA1	Cross-term dependence of A1	m/V	0
PA2	Cross-term dependence of A2	m	0
PACDE	Cross-term dependence of ACDE	m^2/V	0
PAGS	Cross-term dependence of AGS	m/V	0
PALPHA0	Cross-term dependence of ALPHA0	m^2/V	0
PALPHA1	Cross-term dependence of ALPHA1	m/V	0
PAT	Cross-term dependence of AT	m^2/s	0

Table 2.80: BSIM3 Device Model Parameters

Parameter	Description	Units	Default
PB0	Cross-term dependence of B0	m^2	0
PB1	Cross-term dependence of B1	m^2	0
PBETA0	Cross-term dependence of BETA0	Vm	0
PCDSC	Cross-term dependence of CDSC	F/m	0
PCDSCB	Cross-term dependence of CDSCB	F/(Vm)	0
PCDSCD	Cross-term dependence of CDSCD	F/(Vm)	0
PCF	Cross-term dependence of CF	F	0
PCGDL	Cross-term dependence of CGDL	F	0
PCGSL	Cross-term dependence of CGSL	F	0
PCIT	Cross-term dependence of CIT	F/m	0
PCKAPPA	Cross-term dependence of CKAPPA	F	0
PCLC	Cross-term dependence of CLC	m^2	0
PCLE	Cross-term dependence of CLE	m	0
PDELTA	Cross-term dependence of DELTA	Vm	0
PDROUT	Cross-term dependence of DROUT	m	0
PDSUB	Cross-term dependence of DSUB	m	0
PDVT0	Cross-term dependence of DVT0	m	0
PDVT0W	Cross-term dependence of DVT0W	–	0
PDVT1	Cross-term dependence of DVT1	m	0
PDVT1W	Cross-term dependence of DVT1W	–	0
PDVT2	Cross-term dependence of DVT2	m/V	0
PDVT2W	Cross-term dependence of DVT2W	m/V	0
PDWB	Cross-term dependence of DWB	$m^2/V^{1/2}$	0
PDWG	Cross-term dependence of DWG	$m^2/V^{1/2}$	0
PELM	Cross-term dependence of ELM	m	0
PETA0	Cross-term dependence of ETA0	m	0
PETAB	Cross-term dependence of ETAB	m/V	0
PGAMMA1	Cross-term dependence of GAMMA1	$V^{1/2}m$	0
PGAMMA2	Cross-term dependence of GAMMA2	$V^{1/2}m$	0
PK1	Cross-term dependence of K1	$V^{1/2}m$	0
PK2	Cross-term dependence of K2	m	0
PK3	Cross-term dependence of K3	m	0
PK3B	Cross-term dependence of K3B	m/V	0
PKETA	Cross-term dependence of KETA	m/V	0
PKT1	Cross-term dependence of KT1	Vm	0

Table 2.80: BSIM3 Device Model Parameters

Parameter	Description	Units	Default
PKT1L	Cross-term dependence of KT1L	Vm^2	0
PKT2	Cross-term dependence of KT2	m	0
PMOIN	Cross-term dependence of MOIN	m	0
PNCH	Cross-term dependence of NCH	m/cm^3	0
PNFACTOR	Cross-term dependence of NFACTOR	m	0
PNGATE	Cross-term dependence of NGATE	m/cm^3	0
PNLX	Cross-term dependence of NLX	m^2	0
PNOFF	Cross-term dependence of NOFF	m	0
PNSUB	Cross-term dependence of NSUB	m/cm^3	0
PPCLM	Cross-term dependence of PCLM	m	0
PPDIBLC1	Cross-term dependence of PDIBLC1	m	0
PPDIBLC2	Cross-term dependence of PDIBLC2	m	0
PPDIBLCB	Cross-term dependence of PDIBLCB	m/V	0
PPRT	Cross-term dependence of PRT	$\Omega\ \mu m$ m	0
PPRWB	Cross-term dependence of PRWB	$m/V^{1/2}$	0
PPRWG	Cross-term dependence of PRWG	m/V	0
PPSCBE1	Cross-term dependence of PSCBE1	V	0
PPSCBE2	Cross-term dependence of PSCBE2	V	0
PPVAG	Cross-term dependence of PVAG	m	0
PRDSW	Cross-term dependence of RDSW	$\Omega\ \mu m$ m	0
PU0	Cross-term dependence of U0	$m/(Vcm^2s)$	0
PUA	Cross-term dependence of UA	m^2/V	0
PUA1	Cross-term dependence of UA1	m^2/V	0
PUB	Cross-term dependence of UB	m^3/V^2	0
PUB1	Cross-term dependence of UB1	m^3/V^2	0
PUC	Cross-term dependence of UC	m^2/V^2	0
PUC1	Cross-term dependence of UC1	$m^2/(^\circ CV^2)$	0
PUTE	Cross-term dependence of UTE	m	0
PVBM	Cross-term dependence of VBM	Vm	0
PVBX	Cross-term dependence of VBX	Vm	0
PVFB	Cross-term dependence of VFB	Vm	0
PVFBCV	Cross-term dependence of VFBCV	Vm	0
PVOFF	Cross-term dependence of VOFF	Vm	0
PVOFFCV	Cross-term dependence of VOFFCV	Vm	0
PVSAT	Cross-term dependence of VSAT	m^2/s	0

Table 2.80: BSIM3 Device Model Parameters

Parameter	Description	Units	Default
PVTH0	Cross-term dependence of VTH0	Vm	0
PW0	Cross-term dependence of W0	m^2	0
PWR	Cross-term dependence of WR	m	0
PXJ	Cross-term dependence of XJ	m^2	0
PXT	Cross-term dependence of XT	m^2	0
WA0	Width dependence of A0	m	0
WA1	Width dependence of A1	m/V	0
WA2	Width dependence of A2	m	0
WACDE	Width dependence of ACDE	m^2/V	0
WAGS	Width dependence of AGS	m/V	0
WALPHA0	Width dependence of ALPHA0	m^2/V	0
WALPHA1	Width dependence of ALPHA1	m/V	0
WAT	Width dependence of AT	m^2/s	0
WB0	Width dependence of B0	m^2	0
WB1	Width dependence of B1	m^2	0
WBETA0	Width dependence of BETA0	Vm	0
WCDSC	Width dependence of CDSC	F/m	0
WCDSCB	Width dependence of CDSCB	F/(Vm)	0
WCDSCD	Width dependence of CDSCD	F/(Vm)	0
WCF	Width dependence of CF	F	0
WCGDL	Width dependence of CGDL	F	0
WCGSL	Width dependence of CGSL	F	0
WCIT	Width dependence of CIT	F/m	0
WCKAPPA	Width dependence of CKAPPA	F	0
WCLC	Width dependence of CLC	m^2	0
WCLE	Width dependence of CLE	m	0
WDELTA	Width dependence of DELTA	Vm	0
WDROUT	Width dependence of DROUT	m	0
WDSUB	Width dependence of DSUB	m	0
WDVT0	Width dependence of DVT0	m	0
WDVT0W	Width dependence of DVT0W	–	0
WDVT1	Width dependence of DVT1	m	0
WDVT1W	Width dependence of DVT1W	–	0
WDVT2	Width dependence of DVT2	m/V	0
WDVT2W	Width dependence of DVT2W	m/V	0

Table 2.80: BSIM3 Device Model Parameters

Parameter	Description	Units	Default
WDWB	Width dependence of DWB	$m^2/V^{1/2}$	0
WDWG	Width dependence of DWG	$m^2/V^{1/2}$	0
WELM	Width dependence of ELM	m	0
WETA0	Width dependence of ETA0	m	0
WETAB	Width dependence of ETAB	m/V	0
WGAMMA1	Width dependence of GAMMA1	$V^{1/2}m$	0
WGAMMA2	Width dependence of GAMMA2	$V^{1/2}m$	0
WK1	Width dependence of K1	$V^{1/2}m$	0
WK2	Width dependence of K2	m	0
WK3	Width dependence of K3	m	0
WK3B	Width dependence of K3B	m/V	0
WKETA	Width dependence of KETA	m/V	0
WKT1	Width dependence of KT1	Vm	0
WKT1L	Width dependence of KT1L	Vm^2	0
WKT2	Width dependence of KT2	m	0
WMOIN	Width dependence of MOIN	m	0
WNCH	Width dependence of NCH	m/cm^3	0
WNFACTOR	Width dependence of NFACTOR	m	0
WNGATE	Width dependence of NGATE	m/cm^3	0
WNLX	Width dependence of NLX	m^2	0
WNOFF	Width dependence of NOFF	m	0
WNSUB	Width dependence of NSUB	m/cm^3	0
WPCLM	Width dependence of PCLM	m	0
WPDIBLC1	Width dependence of PDIBLC1	m	0
WPDIBLC2	Width dependence of PDIBLC2	m	0
WPDIBLCB	Width dependence of PDIBLCB	m/V	0
WPRT	Width dependence of PRT	$\Omega\ \mu m\ m$	0
WPRWB	Width dependence of PRWB	$m/V^{1/2}$	0
WPRWG	Width dependence of PRWG	m/V	0
WPSCBE1	Width dependence of PSCBE1	V	0
WPSCBE2	Width dependence of PSCBE2	V	0
WPVAG	Width dependence of PVAG	m	0
WRDSW	Width dependence of RDSW	$\Omega\ \mu m\ m$	0
WU0	Width dependence of U0	$m/(Vcm^2s)$	0
WUA	Width dependence of UA	m^2/V	0

Table 2.80: BSIM3 Device Model Parameters

Parameter	Description	Units	Default
WUA1	Width dependence of UA1	m^2/V	0
WUB	Width dependence of UB	m^3/V^2	0
WUB1	Width dependence of UB1	m^3/V^2	0
WUC	Width dependence of UC	m^2/V^2	0
WUC1	Width dependence of UC1	$m^2/(^\circ CV^2)$	0
WUTE	Width dependence of UTE	m	0
WVBM	Width dependence of VBM	Vm	0
WVBX	Width dependence of VBX	Vm	0
WVFB	Width dependence of VFB	Vm	0
WVFBCV	Width dependence of VFBCV	Vm	0
WVOFF	Width dependence of VOFF	Vm	0
WVOFFCV	Width dependence of VOFFCV	Vm	0
WVSAT	Width dependence of VSAT	m^2/s	0
WVTH0	Width dependence of VTH0	Vm	0
WW0	Width dependence of W0	m^2	0
WWR	Width dependence of WR	m	0
WXJ	Width dependence of XJ	m^2	0
WXT	Width dependence of XT	m^2	0
Doping Parameters			
MJ	Bulk p-n bottom grading coefficient	–	0.5
MJSW	Bulk p-n sidewall grading coefficient	–	0.33
NSUB	Substrate doping density	cm^{-3}	6e+16
Flicker and Thermal Noise Parameters			
AF	Flicker noise exponent	–	1
EF	Flicker exponent	–	1
EM	Saturation field	V/m	4.1e+07
KF	Flicker noise coefficient	–	0
NOIA	Noise parameter a	–	0
NOIB	Noise parameter b	–	0
NOIC	Noise parameter c	–	0
Geometry Parameters			
L	Channel length	m	5e-06
LL	Coefficient of length dependence for length offset	m^{LLN}	0
LLC	Coefficient of length dependence for CV channel length offset	m^{LLN}	0

Table 2.80: BSIM3 Device Model Parameters

Parameter	Description	Units	Default
LLN	Power of length dependence for length offset	–	0
LW	Coefficient of width dependence for length offset	m^{LWN}	0
LWC	Coefficient of width dependence for channel length offset	m^{LWN}	0
LWL	Coefficient of length and width cross term for length offset	$m^{LLN+LWN}$	0
LWLC	Coefficient of length and width dependence for CV channel length offset	$m^{LLN+LWN}$	0
LWN	Power of width dependence for length offset	–	0
TOX	Gate oxide thickness	m	1.5e-08
W	Channel width	m	5e-06
WL	Coefficient of length dependence for width offset	m^{WLN}	0
WLC	Coefficient of length dependence for CV channel width offset	m^{WLN}	0
WLN	Power of length dependece of width offset	–	0
WW	Coefficient of width dependence for width offset	m^{WWN}	0
WWC	Coefficient of width dependence for CV channel width offset	m^{WWN}	0
WWL	Coefficient of length and width cross term for width offset	$m^{WLN+WWN}$	0
WWLC	Coefficient of length and width dependence for CV channel width offset	$m^{WLN+WWN}$	0
WWN	Power of width dependence of width offset	–	0
XJ	Junction depth	m	1.5e-07
NQS Parameters			
ELM	Elmore constant of the channel	–	5
Resistance Parameters			
RSH	Drain,source diffusion sheet resistance	Ω	0
Process Parameters			
GAMMA1	Body effect coefficient near the surface	$V^{1/2}$	0
GAMMA2	Body effect coefficient in the bulk	$V^{1/2}$	0
JS	Bulk p-n saturation current density	A/m^2	0.0001
NCH	Channel doping concentration	cm^{-3}	1.7e+17
TOXM	Gate oxide thickness used in extraction	m	0
U0	Surface mobility	$1/(Vcm^2s)$	0
VBX	Vbs at which the depetion region = XT	V	0
XT	Doping depth	m	1.55e-07

Table 2.80: BSIM3 Device Model Parameters

Parameter	Description	Units	Default
	Temperature Parameters		
AT	Temperature coefficient for saturation velocity	m/s	33000
KT1	Temperature coefficient for threshold voltage	V	-0.11
KT1L	Channel length dependence of the temerature coefficient for the threshold voltage	Vm	0
KT2	Body-bias coefficient fo the threshold voltage temperature effect	–	0.022
NJ	Emission coefficient of junction	–	1
PRT	Temerature coefficient for RDSW	$\Omega\ \mu$m	0
TCJ	Temperature coefficient of Cj	K^{-1}	0
TCJSW	Temperature coefficient of Cswj	K^{-1}	0
TCJSWG	Temperature coefficient of Cjswg	K^{-1}	0
TNOM	Nominal device temperature	°C	Ambient Tempera-ture
TPB	Temperature coefficient of Pb	V/K	0
TPBSW	Temperature coefficient of Pbsw	V/K	0
TPBSWG	Temperature coefficient of Pbswg	V/K	0
UA1	Temperature coefficient for UA	m/V	4.31e-09
UB1	Temperature coefficient for UB	m^2/V^2	-7.61e-18
UC1	Temperature coefficient for UC	m/(°CV^2)	0
UTE	Mobility temerature exponent	–	-1.5
XTI	Junction current temperature exponent coefficient	–	3
	Voltage Parameters		
PB	Bulk p-n bottom potential	V	1

Level 10 MOSFET Tables (BSIM SOI)

For complete documentation of the BSIMSOI model, see the users' manual for the BSIMSOI, available for download at `http://bsim.berkeley.edu/models/bsimsoi/`. **Xyce** implements Version 3.2 of the BSIMSOI, you will have to get the documentation from the FTP archive on the Berkeley site.

In addition to the parameters shown in table 2.81, the BSIM3SOI supports a vector parameter for the initial conditions. `IC1` through `IC5` may therefore be specified compactly as `IC=<ic1>,<ic2>,<ic3>,<ic4>,<ic5>`.

NOTE: Many BSIM SOI parameters listed in tables 2.81 and 2.82 as having default values of zero are actually replaced with internally computed defaults if not given. Specifying zero in your model card will override this internal computation. It is recommended that you only set model parameters that you are actually changing from defaults and that you not generate model cards containing default values from the tables.

Table 2.81: BSIM3 SOI Device Instance Parameters

Parameter	Description	Units	Default
BJTOFF	BJT on/off flag	logical (T/F)	0
DEBUG	BJT on/off flag	logical (T/F)	0
TNODEOUT	Flag indicating external temp node	logical (T/F)	0
VLDEBUG		logical (T/F)	false
	Control Parameters		
M	Multiplier for M devices connected in parallel	–	1
SOIMOD	SIO model selector,SOIMOD=0: BSIMPD,SOIMOD=1: undefined model for PD and FE,SOIMOD=2: ideal FD	–	0
	DC Parameters		
VBSUSR	Vbs specified by user	V	0
	Geometry Parameters		
AD	Drain diffusion area	m^2	0
AEBCP	Substrate to body overlap area for bc prasitics	m^2	0
AGBCP	Gate to body overlap area for bc parasitics	m^2	0
AS	Source diffusion area	m^2	0
FRBODY	Layout dependent body-resistance coefficient	–	1
L	Channel length	m	5e-06
NBC	Number of body contact isolation edge	–	0
NRB	Number of squares in body	–	1

Table 2.81: BSIM3 SOI Device Instance Parameters

Parameter	Description	Units	Default
NRD	Multiplier for RSH to yield parasitic resistance of drain	□	1
NRS	Multiplier for RSH to yield parasitic resistance of source	□	1
NSEG	Number segments for width partitioning	–	1
PD	Drain diffusion perimeter	m	0
PDBCP	Perimeter length for bc parasitics at drain side	m	0
PS	Source diffusion perimeter	m	0
PSBCP	Perimeter length for bc parasitics at source side	m	0
W	Channel width	m	5e-06
RF Parameters			
RGATEMOD	Gate resistance model selector	–	0
Temperature Parameters			
CTH0	Thermal capacitance	F	0
RTH0	normalized thermal resistance	Ω	0
TEMP	Device temperature	°C	27
Voltage Parameters			
IC1	Initial condition on Vds	V	0
IC2	Initial condition on Vgs	V	0
IC3	Initial condition on Vbs	V	0
IC4	Initial condition on Ves	V	0
IC5	Initial condition on Vps	V	0
OFF	Initial condition of no voltage drops accross device	logical (T/F)	false

Table 2.82: BSIM3 SOI Device Model Parameters

Parameter	Description	Units	Default
DELTAVOX	The smoothing parameter in the Vox smoothing function	–	0
DTOXCV	Delta oxide thickness in meters in CapMod3	m	0
FNOIMOD	Flicker noise model selector	–	1
IGBMOD	Flicker noise model selector	–	0
IGCMOD	Gate-channel tunneling current model selector	–	0
KB1	Scaling factor for backgate charge	–	1
NOIF	Floating body excess noise ideality factor	–	1

Table 2.82: BSIM3 SOI Device Model Parameters

Parameter	Description	Units	Default
NTNOI	Thermal noise parameter	–	1
POXEDGE	Factor for the gate edge Tox	–	1
RNOIA	Thermal noise coefficient	–	0.577
RNOIB	Thermal noise coefficient	–	0.37
RSHG	Gate sheet resistance	–	0.1
TNOIA	Thermal noise parameter	–	1.5
TNOIB	Thermal noise parameter	–	3.5
TNOIMOD	Thermal noise model selector	–	0
VBS0FD	Lower bound of built-in potential lowering for FD operation	V	0.5
VBS0PD	Upper bound of built-in potential lowering for FD operation	–	0
VOXH	The limit of Vox in gate current calculation	–	0
VTH0	Threshold voltage	–	0
Bin Parameters			
LMAX	Maximum channel length	m	1
LMIN	Minimum channel length	m	0
WMAX	Maximum channel width	m	1
WMIN	Minimum channel width	m	0
Capacitance Parameters			
ACDE	Exponetial coefficient for charge thickness in capmod = 3 for accumulation and depletion regions	m/V	1
ASD	Sorce/Drain bottom diffusion smoothing parameter	–	0.3
CF	Firing field capacitance	F/m	0
CGDL	Light-doped drain-gate region overlap capacitance	F/m	0
CGDO	Non-LLD region drain-gate overlap capacitance per unit channel length	F/m	0
CGEO	Gate substrate overlap capacitance per unit channel length	F/m	0
CGSL	Light-doped source-gate region overlap capacitance	F/m	0
CGSO	Non-LLD region source-gate overlap capacitance per unit channel length	F/m	0
CJSWG	Source/grain gate sidewall junction capacitance per unit width	F/m	1e-10

Table 2.82: BSIM3 SOI Device Model Parameters

Parameter	Description	Units	Default
CKAPPA	Coefficient for lightly doped region overlap capacitance fireing field capacitance	F/m	0.6
CLC	Constant term for short-channel model	m	1e-08
CLE	Exponetial term for the short-channel model	–	0
CSDESW	Sorce/Drain sidewall fringing capacitance per unit length	F/m	0
CSDMIN	Sorce/Drain bottom diffusion minimum capacitance	V	0
DELVT	Threshold voltage adjust for C-V	V	0
DLBG	Length offset fitting parameter for backgate charge	m	0
DLC	Length offset fitting parameter from C-V	m	0
DLCB	Length offset fitting parameter for body charge	m	0
DWC	Width offset fitting parameter from C-V	m	0
FBODY	Scaling factor for body charge	–	1
LDIFO	Channel length dependency coefficient of diffusion capacitance	–	1
MJSWG	Source/grain gate sidewall junction capacitance grading coeficient	–	0.5
MOIN	Coefficient for the gate-bias dependent surface potential	–	15
NDIF	Power coefficient of channel length dependency for diffusion capacitance	–	-1
NOFF	CV parameter in Vgsteff,CV for weak to strong inversion	–	1
PBSWG	Source/drain gate sidewall junction built-in potential	V	0.7
TT	Diffusion capacitance transit time coefficient	s	1e-12
VSDFB	Sorce/Drain bottom diffusion capacitance flatband voltage	V	0
VSDTH	Sorce/Drain bottom diffusion capacitance threshold voltage	V	0
XPART	Charge partitioning rate flag	–	0
Control Parameters			
BINUNIT	Binning unit selector	–	1
CAPMOD	Flag for capacitance models	–	2
MOBMOD	Mobility model selector	–	1
PARAMCHK	Parameter value check	–	0

Table 2.82: BSIM3 SOI Device Model Parameters

Parameter	Description	Units	Default
SHMOD	Flag for self-heating,0-no self-heating,1-self-heating	–	0
TEMPMODEL	Specifies the type of parameter interpolation over temperature	–	'NONE'
VERSION	Version number	–	'3.2'
	Current Parameters		
AIGC	Parameter for Igc	$(F/g)^{1/2}s/mV$	0
AIGSD	Parameter for Igs,d	$(F/g)^{1/2}s/mV$	0
BIGC	Parameter for Igc	$(F/g)^{1/2}s/mV$	0
BIGSD	Parameter for Igs,d	$(F/g)^{1/2}s/mV$	0
CIGC	Parameter for Igc	V^{-1}	0
CIGSD	Parameter for Igs,d	V^{-1}	0
DLCIG	Delta L for Ig model	V^{-1}	0
NIGC	Parameter for Igc slope	–	1
PIGCD	Parameter for Igc partition	–	1
	DC Parameters		
A0	Bulk charge effect coefficient for channel length	–	1
A1	First non-saturation effect parameter	V^{-1}	0
A2	Second non-saturation factor	–	1
AELY	Channel length dependency of early voltage for bipolar current	V/m	0
AGIDL	GIDL constant	Ω^{-1}	0
AGS	Gate-bias coefficient of abulk	V^{-1}	0
AHLI	High level injection parameter for bipolar current	–	0
ALPHA0	First parameter of impact-ionization current	m/V	0
B0	Bulk charge effect coefficient for channel width	m	0
B1	Bulk charge effect offset	m	0
BETA0	Second parameter of impact-ionization current	V	0
BETA1	Second Vds dependent parameter of impact ionizatin current	–	0
BETA2	Third Vds dependent parameter of impact ionizatin current	V	0.1
BGIDL	GIDL exponential coefficient	V/m	0
CDSC	Drain/source to channel coupling capacitance	F/m^2	0.00024
CDSCB	Body-bias sensitivity of CDSC	$F/(Vm^2)$	0
CDSCD	Drain-bias sensitivity of CDSC	$F/(Vm^2)$	0

Table 2.82: BSIM3 SOI Device Model Parameters

Parameter	Description	Units	Default
CIT	Interface trap capacitance	F/m^2	0
DELTA	Effective Vds parameter	V	0.01
DROUT	L-depedance Coefficient of the DIBL correction parameter in Rout	–	0.56
DSUB	DIBL coefficient exponent in subthreshhold region	–	0
DVT0	First coefficient of short-channel effect effect on threshold voltage	–	2.2
DVT0W	First coefficient of narrow-width effect effect on threshold voltage for small channel length	m^{-1}	0
DVT1	Second coefficient of short-channel effect effect on threshold voltage	–	0.53
DVT1W	Second coefficient of narrow-width effect effect on threshold voltage for small channel length	m^{-1}	5.3e+06
DVT2	Body-bias coefficient of short-channel effect effect on threshold voltage	V^{-1}	-0.032
DVT2W	Body-bias coefficient of narrow-width effect effect on threshold voltage for small channel length	V^{-1}	-0.032
DWB	Coefficient of substrate body bias dependence of Weff	$m/V^{1/2}$	0
DWBC	Width offset for body contact isolation edge	m	0
DWG	Coefficient of gate depedence of Weff	$m/V^{1/2}$	0
ESATII	Saturation channel electric field for impact ionization current	V/m	1e+07
ETA0	DIBL coefficient in subthreshold region	–	0.08
ETAB	Body-bias coefficient for the subthreshold DIBL effect	V^{-1}	-0.07
FBJTII	Fraction of bipolar current affecting the impact ionization	–	0
ISBJT	BJT injection saturation current	A/m^2	1e-06
ISDIF	BOdy to source/drain injection saturation current	A/m^2	0
ISREC	Recombinatin in depletion saturation current	A/m^2	1e-05
ISTUN	Reverse tunneling saturation current	A/m^2	0
K1	First-order body effect coefficient	$V^{1/2}$	0
K1W1	First body effect width depenent parameter	m	0
K1W2	Second body effect width depenent parameter	m	0
K2	second-order body effect coefficient	–	0
K3	Narrow width coefficient	–	0
K3B	Body effect coefficient of K3	V^{-1}	0

Table 2.82: BSIM3 SOI Device Model Parameters

Parameter	Description	Units	Default
KETA	Body-bias coefficient of bulk charge effect	V^{-1}	-0.6
KETAS	Surface potential adjustment for bulk charge effect	V	0
LBJT0	Reference channel length for bipolar current	m	2e-07
LII	Channel length dependent parameter at threshold for impact ionization current	–	0
LINT	Length of offset fiting parameter from I-V without bias	m	0
LN	Electron/hole diffusion length	m	2e-06
NBJT	Power coefficient of channel length	–	1
NDIODE	Diode non-ideality factor	–	1
NFACTOR	Subthreshold swing factor	–	1
NGATE	Poly gate doping concentration	cm^{-3}	0
NGIDL	GIDL Vds enhancement coefficient	V	1.2
NLX	Lateral non-uniform doping parameter	m	1.74e-07
NRECF0	Recombination non-ideality factor at foward bias	–	2
NRECR0	Recombination non-ideality factor at reverse bias	–	10
NTUN	Reverse tunneling non-ideality factor	–	10
PCLM	Channel length modulation parameter	–	1.3
PDIBLC1	First output resistance DIBL effect correction parameter	–	0.39
PDIBLC2	Second output resistance DIBL effect correction parameter	–	0.0086
PDIBLCB	Body effect coefficient of DIBL correction parameter	V^{-1}	0
PRWB	Body effect coefficient of RDSW	$V^{-1/2}$	0
PRWG	Gate-bias effect coefficient of RDSW	V^{-1}	0
PVAG	Gate dependence of early voltage	–	0
RBODY	Intrinsic body contact sheet resistance	$\Omega/\square$	0
RBSH	Intrinsic body contact sheet resistance	$\Omega/\square$	0
RDSW	Parasitic resistance per unit width	$\Omega\ \mu$m	100
RHALO	Body halo sheet resistance	Ω/m	1e+15
SII0	First Vgs dependent parameter of impact ionizatin current	V^{-1}	0.5
SII1	Second Vgs dependent parameter of impact ionizatin current	V^{-1}	0.1
SII2	Third Vgs dependent parameter of impact ionizatin current	–	0

Table 2.82: BSIM3 SOI Device Model Parameters

Parameter	Description	Units	Default
SIID	Vds dependent parameter of drain saturation voltage for impact ionizatin current	V^{-1}	0
TII	Temperature dependent parameter for impact ionization current	–	0
UA	First-order mobility degradation coefficient	m/V	2.25e-09
UB	First-order mobility degradation coefficient	m^2/V^2	5.87e-19
UC	Body effect of mobility degridation coefficient	m/V^2	0
VABJT	Early voltage for bipolar current	V	10
VBM	Maximum applied body-bias in threshold voltage calculation	V	-3
VDSATII0	Normal drain saturatio voltage at threshold for impact ionization current	V	0.9
VOFF	Offset voltage in the subthreshold region at large W and L	V	-0.08
VREC0	Voltage dependent parameter for recombination current	V	0
VSAT	Saturation velocity at temp = TNOM	m/s	80000
VTH0	Threshold voltage at Vbs = 0 for large L	V	0
VTUN0	Voltage dependent parameter for tunneling current	V	0
W0	Narrow-width paameter	m	2.5e-06
WINT	Width-offset fitting parameter from I-V without bias	m	0
WR	Width offset from Weff for Rds Calculation	–	1
Dependency Parameters			
LA0	Length dependence of A0	m	0
LA1	Length dependence of A1	m/V	0
LA2	Length dependence of A2	m	0
LACDE	Length dependence of ACDE	m^2/V	0
LAELY	Length dependence of AELY	V	0
LAGIDL	Length dependence of AGIDL	m/Ω	0
LAGS	Length dependence of AGS	m/V	0
LAHLI	Length dependence of AHLI	m	0
LAIGC	Length dependence of AIGC	$(F/g)^{1/2}sm/mV$	0
LAIGSD	Length dependence of AIGSD	$(F/g)^{1/2}sm/mV$	0
LALPHA0	Length dependence of ALPHA0	m^2/V	0
LALPHAGB1	Length dependence of ALPHAGB1	m/V	0

Table 2.82: BSIM3 SOI Device Model Parameters

Parameter	Description	Units	Default
LALPHAGB2	Length dependence of ALPHAGB2	m/V	0
LAT	Length dependence of AT	m^2/s	0
LB0	Length dependence of B0	m^2	0
LB1	Length dependence of B1	m^2	0
LBETA0	Length dependence of BETA0	Vm	0
LBETA1	Length dependence of BETA1	m	0
LBETA2	Length dependence of BETA2	Vm	0
LBETAGB1	Length dependence of BETAGB1	m/V^2	0
LBETAGB2	Length dependence of BETAGB2	m/V^2	0
LBGIDL	Length dependence of BGIDL	V	0
LBIGC	Length dependence of BIGC	$(F/g)^{1/2}sm/mV$	0
LBIGSD	Length dependence of BIGSD	$(F/g)^{1/2}sm/mV$	0
LCDSC	Length dependence of CDSC	F/m	0
LCDSCB	Length dependence of CDSCB	F/(Vm)	0
LCDSCD	Length dependence of CDSCD	F/(Vm)	0
LCGDL	Length dependence of CGDL	F	0
LCGSL	Length dependence of CGSL	F	0
LCIGC	Length dependence of CIGC	m/V	0
LCIGSD	Length dependence of CIGSD	m/V	0
LCIT	Length dependence of CIT	F/m	0
LCKAPPA	Length dependence of CKAPPA	F	0
LDELTA	Length dependence of DELTA	Vm	0
LDELVT	Length dependence of DELVT	Vm	0
LDROUT	Length dependence of DROUT	m	0
LDSUB	Length dependence of DSUB	m	0
LDVT0	Length dependence of DVT0	m	0
LDVT0W	Length dependence of DVT0W	–	0
LDVT1	Length dependence of DVT1	m	0
LDVT1W	Length dependence of DVT1W	–	0
LDVT2	Length dependence of DVT2	m/V	0
LDVT2W	Length dependence of DVT2W	m/V	0
LDWB	Length dependence of DWB	$m^2/V^{1/2}$	0
LDWG	Length dependence of DWG	$m^2/V^{1/2}$	0
LESATII	Length dependence of ESATII	V	0
LETA0	Length dependence of ETA0	m	0

Table 2.82: BSIM3 SOI Device Model Parameters

Parameter	Description	Units	Default
LETAB	Length dependence of ETAB	m/V	0
LFBJTII	Length dependence of FBJTII	m	0
LISBJT	Length dependence of ISBJT	A/m	0
LISDIF	Length dependence of ISDIF	A/m	0
LISREC	Length dependence of ISREC	A/m	0
LISTUN	Length dependence of ISTUN	A/m	0
LK1	Length dependence of K1	$V^{1/2}m$	0
LK1W1	Length dependence of K1W1	m^2	0
LK1W2	Length dependence of K1W2	m^2	0
LK2	Length dependence of K2	m	0
LK3	Length dependence of K3	m	0
LK3B	Length dependence of K3B	m/V	0
LKB1	Length dependence of KB1	m	0
LKETA	Length dependence of KETA	m/V	0
LKETAS	Length dependence of KETAS	Vm	0
LKT1	Length dependence of KT1	Vm	0
LKT1L	Length dependence of KT1L	Vm^2	0
LKT2	Length dependence of KT2	m	0
LLBJT0	Length dependence of LBJT0	m^2	0
LLII	Length dependence of LII	m	0
LMOIN	Length dependence of MOIN	m	0
LNBJT	Length dependence of NBJT	m	0
LNCH	Length dependence of NCH	m/cm^3	0
LNDIF	Length dependence of NDIF	m	0
LNDIODE	Length dependence of NDIODE	m	0
LNFACTOR	Length dependence of NFACTOR	m	0
LNGATE	Length dependence of NGATE	m/cm^3	0
LNGIDL	Length dependence of NGIDL	Vm	0
LNIGC	Length dependence of NIGC	m	0
LNLX	Length dependence of NLX	m^2	0
LNOFF	Length dependence of NOFF	m	0
LNRECF0	Length dependence of NRECF0	m	0
LNRECR0	Length dependence of NRECR0	m	0
LNSUB	Length dependence of NSUB	m/cm^3	0
LNTRECF	Length dependence of NTRECF	m	0

Table 2.82: BSIM3 SOI Device Model Parameters

Parameter	Description	Units	Default
LNTRECR	Length dependence of NTRECR	m	0
LNTUN	Length dependence of NTUN	m	0
LPCLM	Length dependence of PCLM	m	0
LPDIBLC1	Length dependence of PDIBLC1	m	0
LPDIBLC2	Length dependence of PDIBLC2	m	0
LPDIBLCB	Length dependence of PDIBLCB	m/V	0
LPIGCD	Length dependence of PIGCD	m	0
LPOXEDGE	Length dependence of POXEDGE	m	0
LPRT	Length dependence of PRT	Ω μm m	0
LPRWB	Length dependence of PRWB	m/V$^{1/2}$	0
LPRWG	Length dependence of PRWG	m/V	0
LPVAG	Length dependence of PVAG	m	0
LRDSW	Length dependence of RDSW	Ω μm m	0
LSII0	Length dependence of SII0	m/V	0
LSII1	Length dependence of SII1	m/V	0
LSII2	Length dependence of SII2	m	0
LSIID	Length dependence of SIID	m/V	0
LU0	Length dependence of U0	m/(Vcm^{2}s)	0
LUA	Length dependence of UA	m^2/V	0
LUA1	Length dependence of UA1	m^2/V	0
LUB	Length dependence of UB	m^3/V^2	0
LUB1	Length dependence of UB1	m^3/V^2	0
LUC	Length dependence of UC	m^2/V^2	0
LUC1	Length dependence of UC1	m^2/($^\circ$CV^2)	0
LUTE	Length dependence of UTE	m	0
LVABJT	Length dependence of VABJT	Vm	0
LVDSATII0	Length dependence of VDSATII0	Vm	0
LVOFF	Length dependence of VOFF	Vm	0
LVREC0	Length dependence of VREC0	Vm	0
LVSAT	Length dependence of VSAT	m^2/s	0
LVSDFB	Length dependence of VSDFB	Vm	0
LVSDTH	Length dependence of VSDTH	Vm	0
LVTH0	Length dependence of VTH0	Vm	0
LVTUN0	Length dependence of VTUN0	Vm	0
LW0	Length dependence of W0	m^2	0

Table 2.82: BSIM3 SOI Device Model Parameters

Parameter	Description	Units	Default
LWR	Length dependence of WR	m	0
LXBJT	Length dependence of XBJT	m	0
LXDIF	Length dependence of XDIF	m	0
LXJ	Length dependence of XJ	m^2	0
LXRCRG1	Length dependence of XRCRG1	m	0
LXRCRG2	Length dependence of XRCRG2	m	0
LXREC	Length dependence of XREC	m	0
LXTUN	Length dependence of XTUN	m	0
PA0	Cross-term dependence of A0	m	0
PA1	Cross-term dependence of A1	m/V	0
PA2	Cross-term dependence of A2	m	0
PACDE	Cross-term dependence of ACDE	m^2/V	0
PAELY	Cross-term dependence of AELY	V	0
PAGIDL	Cross-term dependence of AGIDL	m/Ω	0
PAGS	Cross-term dependence of AGS	m/V	0
PAHLI	Cross-term dependence of AHLI	m	0
PAIGC	Cross-term dependence of AIGC	$(F/g)^{1/2}$sm/mV	0
PAIGSD	Cross-term dependence of AIGSD	$(F/g)^{1/2}$sm/mV	0
PALPHA0	Cross-term dependence of ALPHA0	m^2/V	0
PALPHAGB1	Cross-term dependence of ALPHAGB1	m/V	0
PALPHAGB2	Cross-term dependence of ALPHAGB2	m/V	0
PAT	Cross-term dependence of AT	m^2/s	0
PB0	Cross-term dependence of B0	m^2	0
PB1	Cross-term dependence of B1	m^2	0
PBETA0	Cross-term dependence of BETA0	Vm	0
PBETA1	Cross-term dependence of BETA1	m	0
PBETA2	Cross-term dependence of BETA2	Vm	0
PBETAGB1	Cross-term dependence of BETAGB1	m/V^2	0
PBETAGB2	Cross-term dependence of BETAGB2	m/V^2	0
PBGIDL	Cross-term dependence of BGIDL	V	0
PBIGC	Cross-term dependence of BIGC	$(F/g)^{1/2}$sm/mV	0
PBIGSD	Cross-term dependence of BIGSD	$(F/g)^{1/2}$sm/mV	0
PCDSC	Cross-term dependence of CDSC	F/m	0
PCDSCB	Cross-term dependence of CDSCB	F/(Vm)	0
PCDSCD	Cross-term dependence of CDSCD	F/(Vm)	0

Table 2.82: BSIM3 SOI Device Model Parameters

Parameter	Description	Units	Default
PCGDL	Cross-term dependence of CGDL	F	0
PCGSL	Cross-term dependence of CGSL	F	0
PCIGC	Cross-term dependence of CIGC	m/V	0
PCIGSD	Cross-term dependence of CIGSD	m/V	0
PCIT	Cross-term dependence of CIT	F/m	0
PCKAPPA	Cross-term dependence of CKAPPA	F	0
PDELTA	Cross-term dependence of DELTA	Vm	0
PDELVT	Cross-term dependence of DELVT	Vm	0
PDROUT	Cross-term dependence of DROUT	m	0
PDSUB	Cross-term dependence of DSUB	m	0
PDVT0	Cross-term dependence of DVT0	m	0
PDVT0W	Cross-term dependence of DVT0W	–	0
PDVT1	Cross-term dependence of DVT1	m	0
PDVT1W	Cross-term dependence of DVT1W	–	0
PDVT2	Cross-term dependence of DVT2	m/V	0
PDVT2W	Cross-term dependence of DVT2W	m/V	0
PDWB	Cross-term dependence of DWB	$m^2/V^{1/2}$	0
PDWG	Cross-term dependence of DWG	$m^2/V^{1/2}$	0
PESATII	Cross-term dependence of ESATII	V	0
PETA0	Cross-term dependence of ETA0	m	0
PETAB	Cross-term dependence of ETAB	m/V	0
PFBJTII	Cross-term dependence of FBJTII	m	0
PISBJT	Cross-term dependence of ISBJT	A/m	0
PISDIF	Cross-term dependence of ISDIF	A/m	0
PISREC	Cross-term dependence of ISREC	A/m	0
PISTUN	Cross-term dependence of ISTUN	A/m	0
PK1	Cross-term dependence of K1	$V^{1/2}m$	0
PK1W1	Cross-term dependence of K1W1	m^2	0
PK1W2	Cross-term dependence of K1W2	m^2	0
PK2	Cross-term dependence of K2	m	0
PK3	Cross-term dependence of K3	m	0
PK3B	Cross-term dependence of K3B	m/V	0
PKB1	Cross-term dependence of KB1	m	0
PKETA	Cross-term dependence of KETA	m/V	0
PKETAS	Cross-term dependence of KETAS	Vm	0

Table 2.82: BSIM3 SOI Device Model Parameters

Parameter	Description	Units	Default
PKT1	Cross-term dependence of KT1	Vm	0
PKT1L	Cross-term dependence of KT1L	Vm^2	0
PKT2	Cross-term dependence of KT2	m	0
PLBJT0	Cross-term dependence of LBJT0	m^2	0
PLII	Cross-term dependence of LII	m	0
PMOIN	Cross-term dependence of MOIN	m	0
PNBJT	Cross-term dependence of NBJT	m	0
PNCH	Cross-term dependence of NCH	m/cm^3	0
PNDIF	Cross-term dependence of NDIF	m	0
PNDIODE	Cross-term dependence of NDIODE	m	0
PNFACTOR	Cross-term dependence of NFACTOR	m	0
PNGATE	Cross-term dependence of NGATE	m/cm^3	0
PNGIDL	Cross-term dependence of NGIDL	Vm	0
PNIGC	Cross-term dependence of NIGC	m	0
PNLX	Cross-term dependence of NLX	m^2	0
PNOFF	Cross-term dependence of NOFF	m	0
PNRECF0	Cross-term dependence of NRECF0	m	0
PNRECR0	Cross-term dependence of NRECR0	m	0
PNSUB	Cross-term dependence of NSUB	m/cm^3	0
PNTRECF	Cross-term dependence of NTRECF	m	0
PNTRECR	Cross-term dependence of NTRECR	m	0
PNTUN	Cross-term dependence of NTUN	m	0
PPCLM	Cross-term dependence of PCLM	m	0
PPDIBLC1	Cross-term dependence of PDIBLC1	m	0
PPDIBLC2	Cross-term dependence of PDIBLC2	m	0
PPDIBLCB	Cross-term dependence of PDIBLCB	m/V	0
PPIGCD	Cross-term dependence of PIGCD	m	0
PPOXEDGE	Cross-term dependence of POXEDGE	m	0
PPRT	Cross-term dependence of PRT	$\Omega\ \mu m$ m	0
PPRWB	Cross-term dependence of PRWB	$m/V^{1/2}$	0
PPRWG	Cross-term dependence of PRWG	m/V	0
PPVAG	Cross-term dependence of PVAG	m	0
PRDSW	Cross-term dependence of RDSW	$\Omega\ \mu m$ m	0
PSII0	Cross-term dependence of SII0	m/V	0
PSII1	Cross-term dependence of SII1	m/V	0

Table 2.82: BSIM3 SOI Device Model Parameters

Parameter	Description	Units	Default
PSII2	Cross-term dependence of SII2	m	0
PSIID	Cross-term dependence of SIID	m/V	0
PU0	Cross-term dependence of U0	m/(Vcm^{2}s)	0
PUA	Cross-term dependence of UA	m^2/V	0
PUA1	Cross-term dependence of UA1	m^2/V	0
PUB	Cross-term dependence of UB	m^3/V^2	0
PUB1	Cross-term dependence of UB1	m^3/V^2	0
PUC	Cross-term dependence of UC	m^2/V^2	0
PUC1	Cross-term dependence of UC1	m^2/($^\circ$CV^2)	0
PUTE	Cross-term dependence of UTE	m	0
PVABJT	Cross-term dependence of VABJT	Vm	0
PVDSATII0	Cross-term dependence of VDSATII0	Vm	0
PVOFF	Cross-term dependence of VOFF	Vm	0
PVREC0	Cross-term dependence of VREC0	Vm	0
PVSAT	Cross-term dependence of VSAT	m^2/s	0
PVSDFB	Cross-term dependence of VSDFB	Vm	0
PVSDTH	Cross-term dependence of VSDTH	Vm	0
PVTH0	Cross-term dependence of VTH0	Vm	0
PVTUN0	Cross-term dependence of VTUN0	Vm	0
PW0	Cross-term dependence of W0	m^2	0
PWR	Cross-term dependence of WR	m	0
PXBJT	Cross-term dependence of XBJT	m	0
PXDIF	Cross-term dependence of XDIF	m	0
PXJ	Cross-term dependence of XJ	m^2	0
PXRCRG1	Cross-term dependence of XRCRG1	m	0
PXRCRG2	Cross-term dependence of XRCRG2	m	0
PXREC	Cross-term dependence of XREC	m	0
PXTUN	Cross-term dependence of XTUN	m	0
WA0	Width dependence of A0	m	0
WA1	Width dependence of A1	m/V	0
WA2	Width dependence of A2	m	0
WACDE	Width dependence of ACDE	m^2/V	0
WAELY	Width dependence of AELY	V	0
WAGIDL	Width dependence of AGIDL	m/Ω	0
WAGS	Width dependence of AGS	m/V	0

Table 2.82: BSIM3 SOI Device Model Parameters

Parameter	Description	Units	Default
WAHLI	Width dependence of AHLI	m	0
WAIGC	Width dependence of AIGC	$(F/g)^{1/2}sm/mV$	0
WAIGSD	Width dependence of AIGSD	$(F/g)^{1/2}sm/mV$	0
WALPHA0	Width dependence of ALPHA0	m^2/V	0
WALPHAGB1	Width dependence of ALPHAGB1	m/V	0
WALPHAGB2	Width dependence of ALPHAGB2	m/V	0
WAT	Width dependence of AT	m^2/s	0
WB0	Width dependence of B0	m^2	0
WB1	Width dependence of B1	m^2	0
WBETA0	Width dependence of BETA0	Vm	0
WBETA1	Width dependence of BETA1	m	0
WBETA2	Width dependence of BETA2	Vm	0
WBETAGB1	Width dependence of BETAGB1	m/V^2	0
WBETAGB2	Width dependence of BETAGB2	m/V^2	0
WBGIDL	Width dependence of BGIDL	V	0
WBIGC	Width dependence of BIGC	$(F/g)^{1/2}sm/mV$	0
WBIGSD	Width dependence of BIGSD	$(F/g)^{1/2}sm/mV$	0
WCDSC	Width dependence of CDSC	F/m	0
WCDSCB	Width dependence of CDSCB	F/(Vm)	0
WCDSCD	Width dependence of CDSCD	F/(Vm)	0
WCGDL	Width dependence of CGDL	F	0
WCGSL	Width dependence of CGSL	F	0
WCIGC	Width dependence of CIGC	m/V	0
WCIGSD	Width dependence of CIGSD	m/V	0
WCIT	Width dependence of CIT	F/m	0
WCKAPPA	Width dependence of CKAPPA	F	0
WDELTA	Width dependence of DELTA	Vm	0
WDELVT	Width dependence of DELVT	Vm	0
WDROUT	Width dependence of DROUT	m	0
WDSUB	Width dependence of DSUB	m	0
WDVT0	Width dependence of DVT0	m	0
WDVT0W	Width dependence of DVT0W	–	0
WDVT1	Width dependence of DVT1	m	0
WDVT1W	Width dependence of DVT1W	–	0
WDVT2	Width dependence of DVT2	m/V	0

Table 2.82: BSIM3 SOI Device Model Parameters

Parameter	Description	Units	Default
WDVT2W	Width dependence of DVT2W	m/V	0
WDWB	Width dependence of DWB	$m^2/V^{1/2}$	0
WDWG	Width dependence of DWG	$m^2/V^{1/2}$	0
WESATII	Width dependence of ESATII	V	0
WETA0	Width dependence of ETA0	m	0
WETAB	Width dependence of ETAB	m/V	0
WFBJTII	Width dependence of FBJTII	m	0
WISBJT	Width dependence of ISBJT	A/m	0
WISDIF	Width dependence of ISDIF	A/m	0
WISREC	Width dependence of ISREC	A/m	0
WISTUN	Width dependence of ISTUN	A/m	0
WK1	Width dependence of K1	$V^{1/2}m$	0
WK1W1	Width dependence of K1W1	m^2	0
WK1W2	Width dependence of K1W2	m^2	0
WK2	Width dependence of K2	m	0
WK3	Width dependence of K3	m	0
WK3B	Width dependence of K3B	m/V	0
WKB1	Width dependence of KB1	m	0
WKETA	Width dependence of KETA	m/V	0
WKETAS	Width dependence of KETAS	Vm	0
WKT1	Width dependence of KT1	Vm	0
WKT1L	Width dependence of KT1L	Vm^2	0
WKT2	Width dependence of KT2	m	0
WLBJT0	Width dependence of LBJT0	m^2	0
WLII	Width dependence of LII	m	0
WMOIN	Width dependence of MOIN	m	0
WNBJT	Width dependence of NBJT	m	0
WNCH	Width dependence of NCH	m/cm^3	0
WNDIF	Width dependence of NDIF	m	0
WNDIODE	Width dependence of NDIODE	m	0
WNFACTOR	Width dependence of NFACTOR	m	0
WNGATE	Width dependence of NGATE	m/cm^3	0
WNGIDL	Width dependence of NGIDL	Vm	0
WNIGC	Width dependence of NIGC	m	0
WNLX	Width dependence of NLX	m^2	0

Table 2.82: BSIM3 SOI Device Model Parameters

Parameter	Description	Units	Default
WNOFF	Width dependence of NOFF	m	0
WNRECF0	Width dependence of NRECF0	m	0
WNRECR0	Width dependence of NRECR0	m	0
WNSUB	Width dependence of NSUB	m/cm^3	0
WNTRECF	Width dependence of NTRECF	m	0
WNTRECR	Width dependence of NTRECR	m	0
WNTUN	Width dependence of NTUN	m	0
WPCLM	Width dependence of PCLM	m	0
WPDIBLC1	Width dependence of PDIBLC1	m	0
WPDIBLC2	Width dependence of PDIBLC2	m	0
WPDIBLCB	Width dependence of PDIBLCB	m/V	0
WPIGCD	Width dependence of PIGCD	m	0
WPOXEDGE	Width dependence of POXEDGE	m	0
WPRT	Width dependence of PRT	Ω μm m	0
WPRWB	Width dependence of PRWB	m/V$^{1/2}$	0
WPRWG	Width dependence of PRWG	m/V	0
WPVAG	Width dependence of PVAG	m	0
WRDSW	Width dependence of RDSW	Ω μm m	0
WSII0	Width dependence of SII0	m/V	0
WSII1	Width dependence of SII1	m/V	0
WSII2	Width dependence of SII2	m	0
WSIID	Width dependence of SIID	m/V	0
WU0	Width dependence of U0	m/(Vcm^{2}s)	0
WUA	Width dependence of UA	m^2/V	0
WUA1	Width dependence of UA1	m^2/V	0
WUB	Width dependence of UB	m^3/V^2	0
WUB1	Width dependence of UB1	m^3/V^2	0
WUC	Width dependence of UC	m^2/V^2	0
WUC1	Width dependence of UC1	m^2/($^\circ$CV^2)	0
WUTE	Width dependence of UTE	m	0
WVABJT	Width dependence of VABJT	Vm	0
WVDSATII0	Width dependence of VDSATII0	Vm	0
WVOFF	Width dependence of VOFF	Vm	0
WVREC0	Width dependence of VREC0	Vm	0
WVSAT	Width dependence of VSAT	m^2/s	0

Table 2.82: BSIM3 SOI Device Model Parameters

Parameter	Description	Units	Default
WVSDFB	Width dependence of VSDFB	Vm	0
WVSDTH	Width dependence of VSDTH	Vm	0
WVTH0	Width dependence of VTH0	Vm	0
WVTUN0	Width dependence of VTUN0	Vm	0
WW0	Width dependence of W0	m^2	0
WWR	Width dependence of WR	m	0
WXBJT	Width dependence of XBJT	m	0
WXDIF	Width dependence of XDIF	m	0
WXJ	Width dependence of XJ	m^2	0
WXRCRG1	Width dependence of XRCRG1	m	0
WXRCRG2	Width dependence of XRCRG2	m	0
WXREC	Width dependence of XREC	m	0
WXTUN	Width dependence of XTUN	m	0
Doping Parameters			
NSUB	Substrate doping density	cm^{-3}	6e+16
Flicker and Thermal Noise Parameters			
AF	Flicker noise exponent	–	1
EF	Flicker exponent	–	1
EM	Saturation field	V/m	4.1e+07
KF	Flicker noise coefficient	–	0
NOIA	Noise parameter a	–	0
NOIB	Noise parameter b	–	0
NOIC	Noise parameter c	–	8.75e+09
Geometry Parameters			
L	Channel length	m	5e-06
LL	Coefficient of length dependence for length offset	m^{LLN}	0
LLC	Coefficient of length dependence for CV channel length offset	m^{LLN}	0
LLN	Power of length dependence for length offset	–	1
LW	Coefficient of width dependence for length offset	m^{LWN}	0
LWC	Coefficient of width dependence for channel length offset	m^{LWN}	0
LWL	Coefficient of length and width cross term for length offset	$m^{LLN+LWN}$	0
LWLC	Coefficient of length and width dependence for CV channel length offset	$m^{LLN+LWN}$	0

Table 2.82: BSIM3 SOI Device Model Parameters

Parameter	Description	Units	Default
LWN	Power of width dependence for length offset	–	1
TOX	Gate oxide thickness	m	1e-08
W	Channel width	m	5e-06
WL	Coefficient of length dependence for width offset	m^{WLN}	0
WLC	Coefficient of length dependence for CV channel width offset	m^{WLN}	0
WLN	Power of length dependece of width offset	–	1
WW	Coefficient of width dependence for width offset	m^{WWN}	0
WWC	Coefficient of width dependence for CV channel width offset	m^{WWN}	0
WWL	Coefficient of length and width cross term for width offset	$m^{WLN+WWN}$	0
WWLC	Coefficient of length and width dependence for CV channel width offset	$m^{WLN+WWN}$	0
WWN	Power of width dependence of width offset	–	1
XJ	Junction depth	m	0
Resistance Parameters			
RSH	Drain,source diffusion sheet resistance	Ω	0
Process Parameters			
GAMMA1	Body effect coefficient near the surface	$V^{1/2}$	0
GAMMA2	Body effect coefficient in the bulk	$V^{1/2}$	0
NCH	Channel doping concentration	cm^{-3}	1.7e+17
TBOX	Buried oxide thickness	m	3e-07
TOXM	Gate oxide thickness used in extraction	m	0
TSI	Silicon film thickness	m	1e-07
U0	Surface mobility	$1/(Vcm^2s)$	0
VBX	Vbs at which the depetion region = XT	V	0
XT	Doping depth	m	1.55e-07
RF Parameters			
BUG1830FIX	Voltage limter fix for bug 1830	–	0
NGCON	Number of gate contacts	–	1
RGATEMOD	Gate resistance model selector	–	0
XGL	Offset of the gate length due to variations in patterning	m	0
XGW	Distance from the gate contact to the channel edge	m	0

Table 2.82: BSIM3 SOI Device Model Parameters

Parameter	Description	Units	Default
XRCRG1	Parameter for distributed channel resistance effect for intrinsic input resistance	–	12
XRCRG2	Parameter to account for the excess channel diffusion resistance for intrinsic input resistance	–	1
	Temperature Parameters		
AT	Temperature coefficient for saturation velocity	m/s	33000
CTH0	Thermal capacitance per unit width	F/m	1e-05
KT1	Temperature coefficient for threshold voltage	V	-0.11
KT1L	Channel length dependence of the temerature coefficient for the threshold voltage	Vm	0
KT2	Body-bias coefficient fo the threshold voltage temperature effect	–	0.022
NTRECF	Temperature coefficient for NRECF	–	0
NTRECR	Temperature coefficient for NRECR	–	0
PRT	Temerature coefficient for RDSW	$\Omega\ \mu$m	0
RTH0	Thermal resistance per unit width	$\Omega/$m	0
TCJSWG	Temperature coefficient of Cjswg	K^{-1}	0
TNOM	Nominal device temperature	°C	Ambient Tempera-ture
TPBSWG	Temperature coefficient of Pbswg	V/K	0
UA1	Temperature coefficient for UA	m/V	4.31e-09
UB1	Temperature coefficient for UB	m^2/V^2	-7.61e-18
UC1	Temperature coefficient for UC	m/(°CV^2)	0
UTE	Mobility temerature exponent	–	-1.5
WTH0	Minimum width for thermal resistance calculation	m	0
XBJT	Power dependence of JBJT on temperature	–	1
XDIF	Power dependence of JDIF on temperature	–	0
XREC	Power dependence of JREC on temperature	–	1
XTUN	Power dependence of JTUN on temperature	–	0
	Tunnelling Parameters		
ALPHAGB1	First Vox dependent parameter for gate current in inversion	V^{-1}	0.35
ALPHAGB2	First Vox dependent parameter for gate current in accumulation	V^{-1}	0.43
BETAGB1	Second Vox dependent parameter for gate current in inversion	V^{-2}	0.03

Table 2.82: BSIM3 SOI Device Model Parameters

Parameter	Description	Units	Default
BETAGB2	First Vox dependent parameter for gate current in accumulation	V^{-2}	0.05
EBG	Effective bandgap in gate current calculation	V	1.2
IGMOD	Gate current model selector	–	0
NTOX	Power term of gate current	–	1
TOXQM	Oxide thickness for Igb calculation	m	0
TOXREF	Target oxide thickness	m	2.5e-09
VECB	Vaux parameter for conduction band electron tunneling	–	0.026
VEVB	Vaux parameter for valence band electron tunneling	–	0.075
VGB1	Third Vox dependent parameter for gate current in inversion	V	300
VGB2	Third Vox dependent parameter for gate current in accumulation	V	17
Built-in Potential Lowering Parameters			
DK2B	Third backgate body effect parameter for short channel effect	–	0
DVBD0	First short channel effect parameter in FD module	–	0
DVBD1	Second short channel effect parameter in FD module	–	0
K1B	First backgate body effect parameter	–	1
K2B	Second backgate body effect parameter for short channel effect	–	0
MOINFD	Gate bias dependance coefficient of surface potential in FD module	–	1000
NOFFFD	Smoothing parameter in FD module	–	1
SOIMOD	SIO model selector,SOIMOD=0: BSIMPD,SOIMOD=1: undefined model for PD and FE,SOIMOD=2: ideal FD	–	0
VBSA	Offset voltage due to non-idealities	V	0
VOFFFD	Smoothing parameter in FD module	V	0

Level 14/54 MOSFET Tables (BSIM4)

The level 14 MOSFET device in **Xyce** is based on the Berkeley BSIM4 model version 4.6.1. (For HSpice compatibility, the Xyce BSIM4 model can also be specified as level 54.) The model's parameters are given in the following tables. Note that the parameters have not all been properly categorized with units in place. For complete documentation of the BSIM4 model, see the BSIM4 Users Manual, available for download at `http://bsim.berkeley.edu/models/bsim4/`.

Table 2.83: BSIM4 Device Instance Parameters

Parameter	Description	Units	Default
AD	Drain area	–	0
AS	Source area	–	0
IC2		–	0
IC3		–	0
L	Length	–	5e-06
M	Number of parallel copies	–	1
MIN	Minimize either D or S	–	0
NF	Number of fingers	–	1
NGCON	Number of gate contacts	–	0
OFF	Device is initially off	–	false
PD	Drain perimeter	–	0
PS	Source perimeter	–	0
RBDB	Body resistance	–	0
RBPB	Body resistance	–	0
RBPD	Body resistance	–	0
RBPS	Body resistance	–	0
RBSB	Body resistance	–	0
SA	distance between OD edge to poly of one side	–	0
SB	distance between OD edge to poly of the other side	–	0
SC	Distance to a single well edge	–	0
SCA	Integral of the first distribution function for scattered well dopant	–	0
SCB	Integral of the second distribution function for scattered well dopant	–	0
SCC	Integral of the third distribution function for scattered well dopant	–	0
SD	distance between neighbour fingers	–	0
W	Width	–	5e-06
XGW	Distance from gate contact center to device edge	–	0

Table 2.83: BSIM4 Device Instance Parameters

Parameter	Description	Units	Default
	Basic Parameters		
DELVTO	Zero bias threshold voltage variation	V	0
	Control Parameters		
ACNQSMOD	AC NQS model selector	–	0
GEOMOD	Geometry dependent parasitics model selector	–	0
RBODYMOD	Distributed body R model selector	–	0
RGATEMOD	Gate resistance model selector	–	0
RGEOMOD	S/D resistance and contact model selector	–	0
TRNQSMOD	Transient NQS model selector	–	0
	Temperature Parameters		
TEMP	Device temperature	°C	Ambient Tempera-ture
	Voltage Parameters		
IC1	Vector of initial values: Vds,Vgs,Vbs	V	0
	Asymmetric and Bias-Dependent R_{ds} Parameters		
NRD	Number of squares in drain	–	1
NRS	Number of squares in source	–	1

Table 2.84: BSIM4 Device Model Parameters

Parameter	Description	Units	Default
AF	Flicker noise exponent	–	1
AIGSD	Parameter for Igs,d	–	0.0136
AT	Temperature coefficient of vsat	–	33000
BIGSD	Parameter for Igs,d	–	0.00171
BVD	Drain diode breakdown voltage	–	10
BVS	Source diode breakdown voltage	–	10
CIGSD	Parameter for Igs,d	–	0.075
CJD	Drain bottom junction capacitance per unit area	–	0.0005
CJS	Source bottom junction capacitance per unit area	–	0.0005
CJSWD	Drain sidewall junction capacitance per unit periphery	–	5e-10
CJSWGD	Drain (gate side) sidewall junction capacitance per unit width	–	0

Table 2.84: BSIM4 Device Model Parameters

Parameter	Description	Units	Default
CJSWGS	Source (gate side) sidewall junction capacitance per unit width	–	0
CJSWS	Source sidewall junction capacitance per unit periphery	–	5e-10
DLCIG	Delta L for Ig model	–	0
DMCG	Distance of Mid-Contact to Gate edge	–	0
DMCGT	Distance of Mid-Contact to Gate edge in Test structures	–	0
DMCI	Distance of Mid-Contact to Isolation	–	0
DMDG	Distance of Mid-Diffusion to Gate edge	–	0
DWJ	Delta W for S/D junctions	–	0
EF	Flicker noise frequency exponent	–	1
EM	Flicker noise parameter	–	4.1e+07
EPSRGATE	Dielectric constant of gate relative to vacuum	–	11.7
GBMIN	Minimum body conductance	Ω^{-1}	1e-12
IJTHDFWD	Forward drain diode forward limiting current	–	0.1
IJTHDREV	Reverse drain diode forward limiting current	–	0.1
IJTHSFWD	Forward source diode forward limiting current	–	0.1
IJTHSREV	Reverse source diode forward limiting current	–	0.1
JSD	Bottom drain junction reverse saturation current density	–	0.0001
JSS	Bottom source junction reverse saturation current density	–	0.0001
JSWD	Isolation edge sidewall drain junction reverse saturation current density	–	0
JSWGD	Gate edge drain junction reverse saturation current density	–	0
JSWGS	Gate edge source junction reverse saturation current density	–	0
JSWS	Isolation edge sidewall source junction reverse saturation current density	–	0
JTSD	Drain bottom trap-assisted saturation current density	–	0
JTSS	Source bottom trap-assisted saturation current density	–	0
JTSSWD	Drain STI sidewall trap-assisted saturation current density	–	0
JTSSWGD	Drain gate-edge sidewall trap-assisted saturation current density	–	0

Table 2.84: BSIM4 Device Model Parameters

Parameter	Description	Units	Default
JTSSWGS	Source gate-edge sidewall trap-assisted saturation current density	–	0
JTSSWS	Source STI sidewall trap-assisted saturation current density	–	0
K2WE	K2 shift factor for well proximity effect	–	0
K3B	Body effect coefficient of k3	–	0
KF	Flicker noise coefficient	–	0
KT1	Temperature coefficient of Vth	–	-0.11
KT1L	Temperature coefficient of Vth	–	0
KT2	Body-coefficient of kt1	–	0.022
KU0	Mobility degradation/enhancement coefficient for LOD	–	0
KU0WE	Mobility degradation factor for well proximity effect	–	0
KVSAT	Saturation velocity degradation/enhancement parameter for LOD	–	0
KVTH0	Threshold degradation/enhancement parameter for LOD	–	0
KVTH0WE	Threshold shift factor for well proximity effect	–	0
LA0	Length dependence of a0	–	0
LA1	Length dependence of a1	–	0
LA2	Length dependence of a2	–	0
LACDE	Length dependence of acde	–	0
LAGIDL	Length dependence of agidl	–	0
LAGISL	Length dependence of agisl	–	0
LAGS	Length dependence of ags	–	0
LAIGBACC	Length dependence of aigbacc	–	0
LAIGBINV	Length dependence of aigbinv	–	0
LAIGC	Length dependence of aigc	–	0
LAIGD	Length dependence of aigd	–	0
LAIGS	Length dependence of aigs	–	0
LAIGSD	Length dependence of aigsd	–	0
LALPHA0	Length dependence of alpha0	–	0
LALPHA1	Length dependence of alpha1	–	0
LAT	Length dependence of at	–	0
LB0	Length dependence of b0	–	0
LB1	Length dependence of b1	–	0

Table 2.84: BSIM4 Device Model Parameters

Parameter	Description	Units	Default
LBETA0	Length dependence of beta0	–	0
LBGIDL	Length dependence of bgidl	–	0
LBGISL	Length dependence of bgisl	–	0
LBIGBACC	Length dependence of bigbacc	–	0
LBIGBINV	Length dependence of bigbinv	–	0
LBIGC	Length dependence of bigc	–	0
LBIGD	Length dependence of bigd	–	0
LBIGS	Length dependence of bigs	–	0
LBIGSD	Length dependence of bigsd	–	0
LCDSC	Length dependence of cdsc	–	0
LCDSCB	Length dependence of cdscb	–	0
LCDSCD	Length dependence of cdscd	–	0
LCF	Length dependence of cf	–	0
LCGDL	Length dependence of cgdl	–	0
LCGIDL	Length dependence of cgidl	–	0
LCGISL	Length dependence of cgisl	–	0
LCGSL	Length dependence of cgsl	–	0
LCIGBACC	Length dependence of cigbacc	–	0
LCIGBINV	Length dependence of cigbinv	–	0
LCIGC	Length dependence of cigc	–	0
LCIGD	Length dependence of cigd	–	0
LCIGS	Length dependence of cigs	–	0
LCIGSD	Length dependence of cigsd	–	0
LCIT	Length dependence of cit	–	0
LCKAPPAD	Length dependence of ckappad	–	0
LCKAPPAS	Length dependence of ckappas	–	0
LCLC	Length dependence of clc	–	0
LCLE	Length dependence of cle	–	0
LDELTA	Length dependence of delta	–	0
LDROUT	Length dependence of drout	–	0
LDSUB	Length dependence of dsub	–	0
LDVT0	Length dependence of dvt0	–	0
LDVT0W	Length dependence of dvt0w	–	0
LDVT1	Length dependence of dvt1	–	0
LDVT1W	Length dependence of dvt1w	–	0

Table 2.84: BSIM4 Device Model Parameters

Parameter	Description	Units	Default
LDVT2	Length dependence of dvt2	–	0
LDVT2W	Length dependence of dvt2w	–	0
LDVTP0	Length dependence of dvtp0	–	0
LDVTP1	Length dependence of dvtp1	–	0
LDWB	Length dependence of dwb	–	0
LDWG	Length dependence of dwg	–	0
LEGIDL	Length dependence of egidl	–	0
LEGISL	Length dependence of egisl	–	0
LEIGBINV	Length dependence for eigbinv	–	0
LETA0	Length dependence of eta0	–	0
LETAB	Length dependence of etab	–	0
LEU	Length dependence of eu	–	0
LFPROUT	Length dependence of pdiblcb	–	0
LGAMMA1	Length dependence of gamma1	–	0
LGAMMA2	Length dependence of gamma2	–	0
LINTNOI	lint offset for noise calculation	–	0
LK1	Length dependence of k1	–	0
LK2	Length dependence of k2	–	0
LK2WE	Length dependence of k2we	–	0
LK3	Length dependence of k3	–	0
LK3B	Length dependence of k3b	–	0
LKETA	Length dependence of keta	–	0
LKT1	Length dependence of kt1	–	0
LKT1L	Length dependence of kt1l	–	0
LKT2	Length dependence of kt2	–	0
LKU0	Length dependence of ku0	–	0
LKU0WE	Length dependence of ku0we	–	0
LKVTH0	Length dependence of kvth0	–	0
LKVTH0WE	Length dependence of kvth0we	–	0
LL	Length reduction parameter	–	0
LLAMBDA	Length dependence of lambda	–	0
LLC	Length reduction parameter for CV	–	0
LLN	Length reduction parameter	–	1
LLODKU0	Length parameter for u0 LOD effect	–	0
LLODVTH	Length parameter for vth LOD effect	–	0

Table 2.84: BSIM4 Device Model Parameters

Parameter	Description	Units	Default
LLP	Length dependence of lp	–	0
LLPE0	Length dependence of lpe0	–	0
LLPEB	Length dependence of lpeb	–	0
LMAX	Maximum length for the model	–	1
LMIN	Minimum length for the model	–	0
LMINV	Length dependence of minv	–	0
LMINVCV	Length dependence of minvcv	–	0
LMOIN	Length dependence of moin	–	0
LNDEP	Length dependence of ndep	–	0
LNFACTOR	Length dependence of nfactor	–	0
LNGATE	Length dependence of ngate	–	0
LNIGBACC	Length dependence of nigbacc	–	0
LNIGBINV	Length dependence of nigbinv	–	0
LNIGC	Length dependence of nigc	–	0
LNOFF	Length dependence of noff	–	0
LNSD	Length dependence of nsd	–	0
LNSUB	Length dependence of nsub	–	0
LNTOX	Length dependence of ntox	–	0
LODETA0	eta0 shift modification factor for stress effect	–	1
LODK2	K2 shift modification factor for stress effect	–	1
LPCLM	Length dependence of pclm	–	0
LPDIBLC1	Length dependence of pdiblc1	–	0
LPDIBLC2	Length dependence of pdiblc2	–	0
LPDIBLCB	Length dependence of pdiblcb	–	0
LPDITS	Length dependence of pdits	–	0
LPDITSD	Length dependence of pditsd	–	0
LPHIN	Length dependence of phin	–	0
LPIGCD	Length dependence for pigcd	–	0
LPOXEDGE	Length dependence for poxedge	–	0
LPRT	Length dependence of prt	–	0
LPRWB	Length dependence of prwb	–	0
LPRWG	Length dependence of prwg	–	0
LPSCBE1	Length dependence of pscbe1	–	0
LPSCBE2	Length dependence of pscbe2	–	0
LPVAG	Length dependence of pvag	–	0

Table 2.84: BSIM4 Device Model Parameters

Parameter	Description	Units	Default
LRDSW	Length dependence of rdsw	–	0
LRDW	Length dependence of rdw	–	0
LRSW	Length dependence of rsw	–	0
LTVFBSDOFF	Length dependence of tvfbsdoff	–	0
LTVOFF	Length dependence of tvoff	–	0
LU0	Length dependence of u0	–	0
LUA	Length dependence of ua	–	0
LUA1	Length dependence of ua1	–	0
LUB	Length dependence of ub	–	0
LUB1	Length dependence of ub1	–	0
LUC	Length dependence of uc	–	0
LUC1	Length dependence of uc1	–	0
LUD	Length dependence of ud	–	0
LUD1	Length dependence of ud1	–	0
LUP	Length dependence of up	–	0
LUTE	Length dependence of ute	–	0
LVBM	Length dependence of vbm	–	0
LVBX	Length dependence of vbx	–	0
LVFB	Length dependence of vfb	–	0
LVFBCV	Length dependence of vfbcv	–	0
LVFBSDOFF	Length dependence of vfbsdoff	–	0
LVOFF	Length dependence of voff	–	0
LVOFFCV	Length dependence of voffcv	–	0
LVSAT	Length dependence of vsat	–	0
LVTH0		–	0
LVTL	Length dependence of vtl	–	0
LW	Length reduction parameter	–	0
LW0	Length dependence of w0	–	0
LWC	Length reduction parameter for CV	–	0
LWL	Length reduction parameter	–	0
LWLC	Length reduction parameter for CV	–	0
LWN	Length reduction parameter	–	1
LWR	Length dependence of wr	–	0
LXJ	Length dependence of xj	–	0
LXN	Length dependence of xn	–	0

Table 2.84: BSIM4 Device Model Parameters

Parameter	Description	Units	Default
LXRCRG1	Length dependence of xrcrg1	–	0
LXRCRG2	Length dependence of xrcrg2	–	0
LXT	Length dependence of xt	–	0
MJD	Drain bottom junction capacitance grading coefficient	–	0.5
MJS	Source bottom junction capacitance grading coefficient	–	0.5
MJSWD	Drain sidewall junction capacitance grading coefficient	–	0.33
MJSWGD	Drain (gate side) sidewall junction capacitance grading coefficient	–	0.33
MJSWGS	Source (gate side) sidewall junction capacitance grading coefficient	–	0.33
MJSWS	Source sidewall junction capacitance grading coefficient	–	0.33
NGCON	Number of gate contacts	–	1
NJD	Drain junction emission coefficient	–	1
NJS	Source junction emission coefficient	–	1
NJTS	Non-ideality factor for bottom junction	–	20
NJTSD	Non-ideality factor for bottom junction drain side	–	20
NJTSSW	Non-ideality factor for STI sidewall junction	–	20
NJTSSWD	Non-ideality factor for STI sidewall junction drain side	–	20
NJTSSWG	Non-ideality factor for gate-edge sidewall junction	–	20
NJTSSWGD	Non-ideality factor for gate-edge sidewall junction drain side	–	20
NTNOI	Thermal noise parameter	–	1
PA0	Cross-term dependence of a0	–	0
PA1	Cross-term dependence of a1	–	0
PA2	Cross-term dependence of a2	–	0
PACDE	Cross-term dependence of acde	–	0
PAGIDL	Cross-term dependence of agidl	–	0
PAGISL	Cross-term dependence of agisl	–	0
PAGS	Cross-term dependence of ags	–	0
PAIGBACC	Cross-term dependence of aigbacc	–	0
PAIGBINV	Cross-term dependence of aigbinv	–	0
PAIGC	Cross-term dependence of aigc	–	0

Table 2.84: BSIM4 Device Model Parameters

Parameter	Description	Units	Default
PAIGD	Cross-term dependence of aigd	–	0
PAIGS	Cross-term dependence of aigs	–	0
PAIGSD	Cross-term dependence of aigsd	–	0
PALPHA0	Cross-term dependence of alpha0	–	0
PALPHA1	Cross-term dependence of alpha1	–	0
PAT	Cross-term dependence of at	–	0
PB0	Cross-term dependence of b0	–	0
PB1	Cross-term dependence of b1	–	0
PBD	Drain junction built-in potential	–	1
PBETA0	Cross-term dependence of beta0	–	0
PBGIDL	Cross-term dependence of bgidl	–	0
PBGISL	Cross-term dependence of bgisl	–	0
PBIGBACC	Cross-term dependence of bigbacc	–	0
PBIGBINV	Cross-term dependence of bigbinv	–	0
PBIGC	Cross-term dependence of bigc	–	0
PBIGD	Cross-term dependence of bigd	–	0
PBIGS	Cross-term dependence of bigs	–	0
PBIGSD	Cross-term dependence of bigsd	–	0
PBS	Source junction built-in potential	–	1
PBSWD	Drain sidewall junction capacitance built in potential	–	1
PBSWGD	Drain (gate side) sidewall junction capacitance built in potential	–	0
PBSWGS	Source (gate side) sidewall junction capacitance built in potential	–	0
PBSWS	Source sidewall junction capacitance built in potential	–	1
PCDSC	Cross-term dependence of cdsc	–	0
PCDSCB	Cross-term dependence of cdscb	–	0
PCDSCD	Cross-term dependence of cdscd	–	0
PCF	Cross-term dependence of cf	–	0
PCGDL	Cross-term dependence of cgdl	–	0
PCGIDL	Cross-term dependence of cgidl	–	0
PCGISL	Cross-term dependence of cgisl	–	0
PCGSL	Cross-term dependence of cgsl	–	0
PCIGBACC	Cross-term dependence of cigbacc	–	0

Table 2.84: BSIM4 Device Model Parameters

Parameter	Description	Units	Default
PCIGBINV	Cross-term dependence of cigbinv	–	0
PCIGC	Cross-term dependence of cigc	–	0
PCIGD	Cross-term dependence of cigd	–	0
PCIGS	Cross-term dependence of cigs	–	0
PCIGSD	Cross-term dependence of cigsd	–	0
PCIT	Cross-term dependence of cit	–	0
PCKAPPAD	Cross-term dependence of ckappad	–	0
PCKAPPAS	Cross-term dependence of ckappas	–	0
PCLC	Cross-term dependence of clc	–	0
PCLE	Cross-term dependence of cle	–	0
PDELTA	Cross-term dependence of delta	–	0
PDROUT	Cross-term dependence of drout	–	0
PDSUB	Cross-term dependence of dsub	–	0
PDVT0	Cross-term dependence of dvt0	–	0
PDVT0W	Cross-term dependence of dvt0w	–	0
PDVT1	Cross-term dependence of dvt1	–	0
PDVT1W	Cross-term dependence of dvt1w	–	0
PDVT2	Cross-term dependence of dvt2	–	0
PDVT2W	Cross-term dependence of dvt2w	–	0
PDVTP0	Cross-term dependence of dvtp0	–	0
PDVTP1	Cross-term dependence of dvtp1	–	0
PDWB	Cross-term dependence of dwb	–	0
PDWG	Cross-term dependence of dwg	–	0
PEGIDL	Cross-term dependence of egidl	–	0
PEGISL	Cross-term dependence of egisl	–	0
PEIGBINV	Cross-term dependence for eigbinv	–	0
PETA0	Cross-term dependence of eta0	–	0
PETAB	Cross-term dependence of etab	–	0
PEU	Cross-term dependence of eu	–	0
PFPROUT	Cross-term dependence of pdiblcb	–	0
PGAMMA1	Cross-term dependence of gamma1	–	0
PGAMMA2	Cross-term dependence of gamma2	–	0
PHIG	Work Function of gate	–	4.05
PK1	Cross-term dependence of k1	–	0
PK2	Cross-term dependence of k2	–	0

Table 2.84: BSIM4 Device Model Parameters

Parameter	Description	Units	Default
PK2WE	Cross-term dependence of k2we	–	0
PK3	Cross-term dependence of k3	–	0
PK3B	Cross-term dependence of k3b	–	0
PKETA	Cross-term dependence of keta	–	0
PKT1	Cross-term dependence of kt1	–	0
PKT1L	Cross-term dependence of kt1l	–	0
PKT2	Cross-term dependence of kt2	–	0
PKU0	Cross-term dependence of ku0	–	0
PKU0WE	Cross-term dependence of ku0we	–	0
PKVTH0	Cross-term dependence of kvth0	–	0
PKVTH0WE	Cross-term dependence of kvth0we	–	0
PLAMBDA	Cross-term dependence of lambda	–	0
PLP	Cross-term dependence of lp	–	0
PLPE0	Cross-term dependence of lpe0	–	0
PLPEB	Cross-term dependence of lpeb	–	0
PMINV	Cross-term dependence of minv	–	0
PMINVCV	Cross-term dependence of minvcv	–	0
PMOIN	Cross-term dependence of moin	–	0
PNDEP	Cross-term dependence of ndep	–	0
PNFACTOR	Cross-term dependence of nfactor	–	0
PNGATE	Cross-term dependence of ngate	–	0
PNIGBACC	Cross-term dependence of nigbacc	–	0
PNIGBINV	Cross-term dependence of nigbinv	–	0
PNIGC	Cross-term dependence of nigc	–	0
PNOFF	Cross-term dependence of noff	–	0
PNSD	Cross-term dependence of nsd	–	0
PNSUB	Cross-term dependence of nsub	–	0
PNTOX	Cross-term dependence of ntox	–	0
PPCLM	Cross-term dependence of pclm	–	0
PPDIBLC1	Cross-term dependence of pdiblc1	–	0
PPDIBLC2	Cross-term dependence of pdiblc2	–	0
PPDIBLCB	Cross-term dependence of pdiblcb	–	0
PPDITS	Cross-term dependence of pdits	–	0
PPDITSD	Cross-term dependence of pditsd	–	0
PPHIN	Cross-term dependence of phin	–	0

Table 2.84: BSIM4 Device Model Parameters

Parameter	Description	Units	Default
PPIGCD	Cross-term dependence for pigcd	–	0
PPOXEDGE	Cross-term dependence for poxedge	–	0
PPRT	Cross-term dependence of prt	–	0
PPRWB	Cross-term dependence of prwb	–	0
PPRWG	Cross-term dependence of prwg	–	0
PPSCBE1	Cross-term dependence of pscbe1	–	0
PPSCBE2	Cross-term dependence of pscbe2	–	0
PPVAG	Cross-term dependence of pvag	–	0
PRDSW	Cross-term dependence of rdsw	–	0
PRDW	Cross-term dependence of rdw	–	0
PRSW	Cross-term dependence of rsw	–	0
PRT	Temperature coefficient of parasitic resistance	–	0
PTVFBSDOFF	Cross-term dependence of tvfbsdoff	–	0
PTVOFF	Cross-term dependence of tvoff	–	0
PU0	Cross-term dependence of u0	–	0
PUA	Cross-term dependence of ua	–	0
PUA1	Cross-term dependence of ua1	–	0
PUB	Cross-term dependence of ub	–	0
PUB1	Cross-term dependence of ub1	–	0
PUC	Cross-term dependence of uc	–	0
PUC1	Cross-term dependence of uc1	–	0
PUD	Cross-term dependence of ud	–	0
PUD1	Cross-term dependence of ud1	–	0
PUP	Cross-term dependence of up	–	0
PUTE	Cross-term dependence of ute	–	0
PVAG	Gate dependence of output resistance parameter	–	0
PVBM	Cross-term dependence of vbm	–	0
PVBX	Cross-term dependence of vbx	–	0
PVFB	Cross-term dependence of vfb	–	0
PVFBCV	Cross-term dependence of vfbcv	–	0
PVFBSDOFF	Cross-term dependence of vfbsdoff	–	0
PVOFF	Cross-term dependence of voff	–	0
PVOFFCV	Cross-term dependence of voffcv	–	0
PVSAT	Cross-term dependence of vsat	–	0
PVTH0		–	0

Table 2.84: BSIM4 Device Model Parameters

Parameter	Description	Units	Default
PVTL	Cross-term dependence of vtl	–	0
PW0	Cross-term dependence of w0	–	0
PWR	Cross-term dependence of wr	–	0
PXJ	Cross-term dependence of xj	–	0
PXN	Cross-term dependence of xn	–	0
PXRCRG1	Cross-term dependence of xrcrg1	–	0
PXRCRG2	Cross-term dependence of xrcrg2	–	0
PXT	Cross-term dependence of xt	–	0
RBDB	Resistance between bNode and dbNode	Ω	50
RBDBX0	Body resistance RBDBX scaling	–	100
RBDBY0	Body resistance RBDBY scaling	–	100
RBPB	Resistance between bNodePrime and bNode	Ω	50
RBPBX0	Body resistance RBPBX scaling	–	100
RBPBXL	Body resistance RBPBX L scaling	–	0
RBPBXNF	Body resistance RBPBX NF scaling	–	0
RBPBXW	Body resistance RBPBX W scaling	–	0
RBPBY0	Body resistance RBPBY scaling	–	100
RBPBYL	Body resistance RBPBY L scaling	–	0
RBPBYNF	Body resistance RBPBY NF scaling	–	0
RBPBYW	Body resistance RBPBY W scaling	–	0
RBPD	Resistance between bNodePrime and bNode	Ω	50
RBPD0	Body resistance RBPD scaling	–	50
RBPDL	Body resistance RBPD L scaling	–	0
RBPDNF	Body resistance RBPD NF scaling	–	0
RBPDW	Body resistance RBPD W scaling	–	0
RBPS	Resistance between bNodePrime and sbNode	Ω	50
RBPS0	Body resistance RBPS scaling	–	50
RBPSL	Body resistance RBPS L scaling	–	0
RBPSNF	Body resistance RBPS NF scaling	–	0
RBPSW	Body resistance RBPS W scaling	–	0
RBSB	Resistance between bNode and sbNode	Ω	50
RBSBX0	Body resistance RBSBX scaling	–	100
RBSBY0	Body resistance RBSBY scaling	–	100
RBSDBXL	Body resistance RBSDBX L scaling	–	0
RBSDBXNF	Body resistance RBSDBX NF scaling	–	0

Table 2.84: BSIM4 Device Model Parameters

Parameter	Description	Units	Default
RBSDBXW	Body resistance RBSDBX W scaling	–	0
RBSDBYL	Body resistance RBSDBY L scaling	–	0
RBSDBYNF	Body resistance RBSDBY NF scaling	–	0
RBSDBYW	Body resistance RBSDBY W scaling	–	0
RNOIA	Thermal noise coefficient	–	0.577
RNOIB	Thermal noise coefficient	–	0.5164
SAREF	Reference distance between OD edge to poly of one side	–	1e-06
SBREF	Reference distance between OD edge to poly of the other side	–	1e-06
SCREF	Reference distance to calculate SCA,SCB and SCC	–	1e-06
STETA0	eta0 shift factor related to stress effect on vth	–	0
STK2	K2 shift factor related to stress effect on vth	–	0
TCJ	Temperature coefficient of cj	–	0
TCJSW	Temperature coefficient of cjsw	–	0
TCJSWG	Temperature coefficient of cjswg	–	0
TKU0	Temperature coefficient of KU0	–	0
TNJTS	Temperature coefficient for NJTS	–	0
TNJTSD	Temperature coefficient for NJTSD	–	0
TNJTSSW	Temperature coefficient for NJTSSW	–	0
TNJTSSWD	Temperature coefficient for NJTSSWD	–	0
TNJTSSWG	Temperature coefficient for NJTSSWG	–	0
TNJTSSWGD	Temperature coefficient for NJTSSWGD	–	0
TNOIA	Thermal noise parameter	–	1.5
TNOIB	Thermal noise parameter	–	3.5
TNOM	Parameter measurement temperature	–	Ambient Tempera-ture
TPB	Temperature coefficient of pb	–	0
TPBSW	Temperature coefficient of pbsw	–	0
TPBSWG	Temperature coefficient of pbswg	–	0
TVFBSDOFF	Temperature parameter for vfbsdoff	–	0
TVOFF	Temperature parameter for voff	–	0
UA1	Temperature coefficient of ua	–	1e-09
UB1	Temperature coefficient of ub	–	-1e-18

Table 2.84: BSIM4 Device Model Parameters

Parameter	Description	Units	Default
UC1	Temperature coefficient of uc	–	0
UD1	Temperature coefficient of ud	–	0
UTE	Temperature coefficient of mobility	–	-1.5
VTSD	Drain bottom trap-assisted voltage dependent parameter	–	10
VTSS	Source bottom trap-assisted voltage dependent parameter	–	10
VTSSWD	Drain STI sidewall trap-assisted voltage dependent parameter	–	10
VTSSWGD	Drain gate-edge sidewall trap-assisted voltage dependent parameter	–	10
VTSSWGS	Source gate-edge sidewall trap-assisted voltage dependent parameter	–	10
VTSSWS	Source STI sidewall trap-assisted voltage dependent parameter	–	10
WA0	Width dependence of a0	–	0
WA1	Width dependence of a1	–	0
WA2	Width dependence of a2	–	0
WACDE	Width dependence of acde	–	0
WAGIDL	Width dependence of agidl	–	0
WAGISL	Width dependence of agisl	–	0
WAGS	Width dependence of ags	–	0
WAIGBACC	Width dependence of aigbacc	–	0
WAIGBINV	Width dependence of aigbinv	–	0
WAIGC	Width dependence of aigc	–	0
WAIGD	Width dependence of aigd	–	0
WAIGS	Width dependence of aigs	–	0
WAIGSD	Width dependence of aigsd	–	0
WALPHA0	Width dependence of alpha0	–	0
WALPHA1	Width dependence of alpha1	–	0
WAT	Width dependence of at	–	0
WB0	Width dependence of b0	–	0
WB1	Width dependence of b1	–	0
WBETA0	Width dependence of beta0	–	0
WBGIDL	Width dependence of bgidl	–	0
WBGISL	Width dependence of bgisl	–	0
WBIGBACC	Width dependence of bigbacc	–	0

Table 2.84: BSIM4 Device Model Parameters

Parameter	Description	Units	Default
WBIGBINV	Width dependence of bigbinv	–	0
WBIGC	Width dependence of bigc	–	0
WBIGD	Width dependence of bigd	–	0
WBIGS	Width dependence of bigs	–	0
WBIGSD	Width dependence of bigsd	–	0
WCDSC	Width dependence of cdsc	–	0
WCDSCB	Width dependence of cdscb	–	0
WCDSCD	Width dependence of cdscd	–	0
WCF	Width dependence of cf	–	0
WCGDL	Width dependence of cgdl	–	0
WCGIDL	Width dependence of cgidl	–	0
WCGISL	Width dependence of cgisl	–	0
WCGSL	Width dependence of cgsl	–	0
WCIGBACC	Width dependence of cigbacc	–	0
WCIGBINV	Width dependence of cigbinv	–	0
WCIGC	Width dependence of cigc	–	0
WCIGD	Width dependence of cigd	–	0
WCIGS	Width dependence of cigs	–	0
WCIGSD	Width dependence of cigsd	–	0
WCIT	Width dependence of cit	–	0
WCKAPPAD	Width dependence of ckappad	–	0
WCKAPPAS	Width dependence of ckappas	–	0
WCLC	Width dependence of clc	–	0
WCLE	Width dependence of cle	–	0
WDELTA	Width dependence of delta	–	0
WDROUT	Width dependence of drout	–	0
WDSUB	Width dependence of dsub	–	0
WDVT0	Width dependence of dvt0	–	0
WDVT0W	Width dependence of dvt0w	–	0
WDVT1	Width dependence of dvt1	–	0
WDVT1W	Width dependence of dvt1w	–	0
WDVT2	Width dependence of dvt2	–	0
WDVT2W	Width dependence of dvt2w	–	0
WDVTP0	Width dependence of dvtp0	–	0
WDVTP1	Width dependence of dvtp1	–	0

Table 2.84: BSIM4 Device Model Parameters

Parameter	Description	Units	Default
WDWB	Width dependence of dwb	–	0
WDWG	Width dependence of dwg	–	0
WEB	Coefficient for SCB	–	0
WEC	Coefficient for SCC	–	0
WEGIDL	Width dependence of egidl	–	0
WEGISL	Width dependence of egisl	–	0
WEIGBINV	Width dependence for eigbinv	–	0
WETA0	Width dependence of eta0	–	0
WETAB	Width dependence of etab	–	0
WEU	Width dependence of eu	–	0
WFPROUT	Width dependence of pdiblcb	–	0
WGAMMA1	Width dependence of gamma1	–	0
WGAMMA2	Width dependence of gamma2	–	0
WK1	Width dependence of k1	–	0
WK2	Width dependence of k2	–	0
WK2WE	Width dependence of k2we	–	0
WK3	Width dependence of k3	–	0
WK3B	Width dependence of k3b	–	0
WKETA	Width dependence of keta	–	0
WKT1	Width dependence of kt1	–	0
WKT1L	Width dependence of kt1l	–	0
WKT2	Width dependence of kt2	–	0
WKU0	Width dependence of ku0	–	0
WKU0WE	Width dependence of ku0we	–	0
WKVTH0	Width dependence of kvth0	–	0
WKVTH0WE	Width dependence of kvth0we	–	0
WL	Width reduction parameter	–	0
WLAMBDA	Width dependence of lambda	–	0
WLC	Width reduction parameter for CV	–	0
WLN	Width reduction parameter	–	1
WLOD	Width parameter for stress effect	–	0
WLODKU0	Width parameter for u0 LOD effect	–	0
WLODVTH	Width parameter for vth LOD effect	–	0
WLP	Width dependence of lp	–	0
WLPE0	Width dependence of lpe0	–	0

Table 2.84: BSIM4 Device Model Parameters

Parameter	Description	Units	Default
WLPEB	Width dependence of lpeb	–	0
WMAX	Maximum width for the model	–	1
WMIN	Minimum width for the model	–	0
WMINV	Width dependence of minv	–	0
WMINVCV	Width dependence of minvcv	–	0
WMOIN	Width dependence of moin	–	0
WNDEP	Width dependence of ndep	–	0
WNFACTOR	Width dependence of nfactor	–	0
WNGATE	Width dependence of ngate	–	0
WNIGBACC	Width dependence of nigbacc	–	0
WNIGBINV	Width dependence of nigbinv	–	0
WNIGC	Width dependence of nigc	–	0
WNOFF	Width dependence of noff	–	0
WNSD	Width dependence of nsd	–	0
WNSUB	Width dependence of nsub	–	0
WNTOX	Width dependence of ntox	–	0
WPCLM	Width dependence of pclm	–	0
WPDIBLC1	Width dependence of pdiblc1	–	0
WPDIBLC2	Width dependence of pdiblc2	–	0
WPDIBLCB	Width dependence of pdiblcb	–	0
WPDITS	Width dependence of pdits	–	0
WPDITSD	Width dependence of pditsd	–	0
WPEMOD	Flag for WPE model (WPEMOD=1 to activate this model)	–	0
WPHIN	Width dependence of phin	–	0
WPIGCD	Width dependence for pigcd	–	0
WPOXEDGE	Width dependence for poxedge	–	0
WPRT	Width dependence of prt	–	0
WPRWB	Width dependence of prwb	–	0
WPRWG	Width dependence of prwg	–	0
WPSCBE1	Width dependence of pscbe1	–	0
WPSCBE2	Width dependence of pscbe2	–	0
WPVAG	Width dependence of pvag	–	0
WRDSW	Width dependence of rdsw	–	0
WRDW	Width dependence of rdw	–	0

Table 2.84: BSIM4 Device Model Parameters

Parameter	Description	Units	Default
WRSW	Width dependence of rsw	–	0
WTVFBSDOFF	Width dependence of tvfbsdoff	–	0
WTVOFF	Width dependence of tvoff	–	0
WU0	Width dependence of u0	–	0
WUA	Width dependence of ua	–	0
WUA1	Width dependence of ua1	–	0
WUB	Width dependence of ub	–	0
WUB1	Width dependence of ub1	–	0
WUC	Width dependence of uc	–	0
WUC1	Width dependence of uc1	–	0
WUD	Width dependence of ud	–	0
WUD1	Width dependence of ud1	–	0
WUP	Width dependence of up	–	0
WUTE	Width dependence of ute	–	0
WVBM	Width dependence of vbm	–	0
WVBX	Width dependence of vbx	–	0
WVFB	Width dependence of vfb	–	0
WVFBCV	Width dependence of vfbcv	–	0
WVFBSDOFF	Width dependence of vfbsdoff	–	0
WVOFF	Width dependence of voff	–	0
WVOFFCV	Width dependence of voffcv	–	0
WVSAT	Width dependence of vsat	–	0
WVTH0		–	0
WVTL	Width dependence of vtl	–	0
WW	Width reduction parameter	–	0
WW0	Width dependence of w0	–	0
WWC	Width reduction parameter for CV	–	0
WWL	Width reduction parameter	–	0
WWLC	Width reduction parameter for CV	–	0
WWN	Width reduction parameter	–	1
WWR	Width dependence of wr	–	0
WXJ	Width dependence of xj	–	0
WXN	Width dependence of xn	–	0
WXRCRG1	Width dependence of xrcrg1	–	0
WXRCRG2	Width dependence of xrcrg2	–	0

Table 2.84: BSIM4 Device Model Parameters

Parameter	Description	Units	Default
WXT	Width dependence of xt	–	0
XGL	Variation in Ldrawn	–	0
XGW	Distance from gate contact center to device edge	–	0
XJBVD	Fitting parameter for drain diode breakdown current	–	1
XJBVS	Fitting parameter for source diode breakdown current	–	1
XL	L offset for channel length due to mask/etch effect	–	0
XRCRG1	First fitting parameter the bias-dependent Rg	–	12
XRCRG2	Second fitting parameter the bias-dependent Rg	–	1
XTID	Drainjunction current temperature exponent	–	3
XTIS	Source junction current temperature exponent	–	3
XTSD	Power dependence of JTSD on temperature	–	0.02
XTSS	Power dependence of JTSS on temperature	–	0.02
XTSSWD	Power dependence of JTSSWD on temperature	–	0.02
XTSSWGD	Power dependence of JTSSWGD on temperature	–	0.02
XTSSWGS	Power dependence of JTSSWGS on temperature	–	0.02
XTSSWS	Power dependence of JTSSWS on temperature	–	0.02
XW	W offset for channel width due to mask/etch effect	–	0
	Basic Parameters		
A0	Non-uniform depletion width effect coefficient.	–	1
A1	Non-saturation effect coefficient	V^{-1}	0
A2	Non-saturation effect coefficient	–	1
ADOS	Charge centroid parameter	–	1
AGS	Gate bias coefficient of Abulk.	V^{-1}	0
B0	Abulk narrow width parameter	m	0
B1	Abulk narrow width parameter	m	0
BDOS	Charge centroid parameter	–	1
BG0SUB	Band-gap of substrate at T=0K	eV	1.16
CDSC	Drain/Source and channel coupling capacitance	F/m^2	0.00024
CDSCB	Body-bias dependence of cdsc	$F/(Vm^2)$	0
CDSCD	Drain-bias dependence of cdsc	$F/(Vm^2)$	0
CIT	Interface state capacitance	F/m^2	0

Table 2.84: BSIM4 Device Model Parameters

Parameter	Description	Units	Default
DELTA	Effective Vds parameter	V	0.01
DROUT	DIBL coefficient of output resistance	–	0.56
DSUB	DIBL coefficient in the subthreshold region	–	0
DVT0	Short channel effect coeff. 0	–	2.2
DVT0W	Narrow Width coeff. 0	–	0
DVT1	Short channel effect coeff. 1	–	0.53
DVT1W	Narrow Width effect coeff. 1	m^{-1}	5.3e+06
DVT2	Short channel effect coeff. 2	V^{-1}	-0.032
DVT2W	Narrow Width effect coeff. 2	V^{-1}	-0.032
DVTP0	First parameter for Vth shift due to pocket	m	0
DVTP1	Second parameter for Vth shift due to pocket	V^{-1}	0
DWB	Width reduction parameter	$m/V^{1/2}$	0
DWG	Width reduction parameter	m/V	0
EASUB	Electron affinity of substrate	V	4.05
EPSRSUB	Dielectric constant of substrate relative to vacuum	–	11.7
ETA0	Subthreshold region DIBL coefficient	–	0.08
ETAB	Subthreshold region DIBL coefficient	V^{-1}	-0.07
EU	Mobility exponent	–	0
FPROUT	Rout degradation coefficient for pocket devices	$V/m^{1/2}$	0
K1	Bulk effect coefficient 1	$V^{-1/2}$	0
K2	Bulk effect coefficient 2	–	0
K3	Narrow width effect coefficient	–	80
KETA	Body-bias coefficient of non-uniform depletion width effect.	V^{-1}	-0.047
LAMBDA	Velocity overshoot parameter	–	0
LC	back scattering parameter	m	5e-09
LINT	Length reduction parameter	m	0
LP	Channel length exponential factor of mobility	m	1e-08
LPE0	Equivalent length of pocket region at zero bias	m	1.74e-07
LPEB	Equivalent length of pocket region accounting for body bias	m	0
MINV	Fitting parameter for moderate inversion in Vgsteff	–	0
NFACTOR	Subthreshold swing Coefficient	–	1

Table 2.84: BSIM4 Device Model Parameters

Parameter	Description	Units	Default
NI0SUB	Intrinsic carrier concentration of substrate at 300.15K	cm^{-3}	1.45e+10
PCLM	Channel length modulation Coefficient	–	1.3
PDIBLC1	Drain-induced barrier lowering coefficient	–	0.39
PDIBLC2	Drain-induced barrier lowering coefficient	–	0.0086
PDIBLCB	Body-effect on drain-induced barrier lowering	V^{-1}	0
PDITS	Coefficient for drain-induced Vth shifts	V^{-1}	0
PDITSD	Vds dependence of drain-induced Vth shifts	V^{-1}	0
PDITSL	Length dependence of drain-induced Vth shifts	m^{-1}	0
PHIN	Adjusting parameter for surface potential due to non-uniform vertical doping	V	0
PSCBE1	Substrate current body-effect coefficient	V/m	4.24e+08
PSCBE2	Substrate current body-effect coefficient	m/V	1e-05
TBGASUB	First parameter of band-gap change due to temperature	eV/K	0.000702
TBGBSUB	Second parameter of band-gap change due to temperature	K	1108
U0	Low-field mobility at Tnom	$m^2/(Vs)$	0
UA	Linear gate dependence of mobility	m/V	0
UB	Quadratic gate dependence of mobility	m^2/V^2	1e-19
UC	Body-bias dependence of mobility	V^{-1}	0
UD	Coulomb scattering factor of mobility	m^{-2}	0
UP	Channel length linear factor of mobility	m^{-2}	0
VBM	Maximum body voltage	V	-3
VDDEOT	Voltage for extraction of equivalent gate oxide thickness	V	1.5
VFB	Flat Band Voltage	V	-1
VOFF	Threshold voltage offset	V	-0.08
VOFFL	Length dependence parameter for Vth offset	V	0
VSAT	Saturation velocity at tnom	m/s	80000
VTH0		V	0
VTL	thermal velocity	m/s	200000
W0	Narrow width effect parameter	m	2.5e-06
WINT	Width reduction parameter	m	0
XN	back scattering parameter	–	3
Capacitance Parameters			

Table 2.84: BSIM4 Device Model Parameters

Parameter	Description	Units	Default
ACDE	Exponential coefficient for finite charge thickness	m/V	1
CF	Fringe capacitance parameter	F/m	0
CGBO	Gate-bulk overlap capacitance per length	–	0
CGDL	New C-V model parameter	F/m	0
CGDO	Gate-drain overlap capacitance per width	F/m	0
CGSL	New C-V model parameter	F/m	0
CGSO	Gate-source overlap capacitance per width	F/m	0
CKAPPAD	D/G overlap C-V parameter	V	0.6
CKAPPAS	S/G overlap C-V parameter	V	0.6
CLC	Vdsat parameter for C-V model	m	1e-07
CLE	Vdsat parameter for C-V model	–	0.6
DLC	Delta L for C-V model	m	0
DWC	Delta W for C-V model	m	0
MINVCV	Fitting parameter for moderate inversion in Vgsteffcv	–	0
MOIN	Coefficient for gate-bias dependent surface potential	–	15
NOFF	C-V turn-on/off parameter	–	1
VFBCV	Flat Band Voltage parameter for capmod=0 only	V	-1
VOFFCV	C-V lateral-shift parameter	V	0
VOFFCVL	Length dependence parameter for Vth offset in CV	–	0
XPART	Channel charge partitioning	F/m	0
Control Parameters			
ACNQSMOD	AC NQS model selector	–	0
BINUNIT	Bin unit selector	–	1
CAPMOD	Capacitance model selector	–	2
CVCHARGEMOD	Capacitance charge model selector	–	0
DIOMOD	Diode IV model selector	–	1
FNOIMOD	Flicker noise model selector	–	1
GEOMOD	Geometry dependent parasitics model selector	–	0
IGBMOD	Gate-to-body Ig model selector	–	0
IGCMOD	Gate-to-channel Ig model selector	–	0
MOBMOD	Mobility model selector	–	0
MTRLMOD	parameter for nonm-silicon substrate or metal gate selector	–	0

Table 2.84: BSIM4 Device Model Parameters

Parameter	Description	Units	Default
PARAMCHK	Model parameter checking selector	–	1
PERMOD	Pd and Ps model selector	–	1
RBODYMOD	Distributed body R model selector	–	0
RDSMOD	Bias-dependent S/D resistance model selector	–	0
RGATEMOD	Gate R model selector	–	0
TEMPMOD	Temperature model selector	–	0
TNOIMOD	Thermal noise model selector	–	0
TRNQSMOD	Transient NQS model selector	–	0
VERSION	parameter for model version	–	'4.6.1'
Flicker and Thermal Noise Parameters			
NOIA	Flicker Noise parameter a	–	0
NOIB	Flicker Noise parameter b	–	0
NOIC	Flicker Noise parameter c	–	0
Process Parameters			
DTOX	Defined as (toxe - toxp)	m	0
EOT	Equivalent gate oxide thickness in meters	m	1.5e-09
EPSROX	Dielectric constant of the gate oxide relative to vacuum	–	3.9
GAMMA1	Vth body coefficient	$V^{1/2}$	0
GAMMA2	Vth body coefficient	$V^{1/2}$	0
NDEP	Channel doping concentration at the depletion edge	cm^{-3}	1.7e+17
NGATE	Poly-gate doping concentration	cm^{-3}	0
NSD	S/D doping concentration	cm^{-3}	1e+20
NSUB	Substrate doping concentration	cm^{-3}	6e+16
RSH	Source-drain sheet resistance	$\Omega/\square$	0
RSHG	Gate sheet resistance	$\Omega/\square$	0.1
TOXE	Electrical gate oxide thickness in meters	m	3e-09
TOXM	Gate oxide thickness at which parameters are extracted	m	3e-09
TOXP	Physical gate oxide thickness in meters	m	3e-09
VBX	Vth transition body Voltage	V	0
XJ	Junction depth in meters	m	1.5e-07
XT	Doping depth	m	1.55e-07
Tunnelling Parameters			
AIGBACC	Parameter for Igb	$(Fs^2/g)^{1/2}/m$	0.0136

Table 2.84: BSIM4 Device Model Parameters

Parameter	Description	Units	Default
AIGBINV	Parameter for Igb	$(Fs^2/g)^{1/2}/m$	0.0111
AIGC	Parameter for Igc	$(Fs^2/g)^{1/2}/m$	0.0136
AIGD	Parameter for Igd	$(Fs^2/g)^{1/2}/m$	0.0136
AIGS	Parameter for Igs	$(Fs^2/g)^{1/2}/m$	0.0136
BIGBACC	Parameter for Igb	$(Fs^2/g)^{1/2}/mV$	0.00171
BIGBINV	Parameter for Igb	$(Fs^2/g)^{1/2}/mV$	0.000949
BIGC	Parameter for Igc	$(Fs^2/g)^{1/2}/mV$	0.00171
BIGD	Parameter for Igd	$(Fs^2/g)^{1/2}/mV$	0.00171
BIGS	Parameter for Igs	$(Fs^2/g)^{1/2}/mV$	0.00171
CIGBACC	Parameter for Igb	V^{-1}	0.075
CIGBINV	Parameter for Igb	V^{-1}	0.006
CIGC	Parameter for Igc	V^{-1}	0.075
CIGD	Parameter for Igd	V^{-1}	0.075
CIGS	Parameter for Igs	V^{-1}	0.075
DLCIGD	Delta L for Ig model drain side	m	0
EIGBINV	Parameter for the Si bandgap for Igbinv	V	1.1
NIGBACC	Parameter for Igbacc slope	–	1
NIGBINV	Parameter for Igbinv slope	–	3
NIGC	Parameter for Igc slope	–	1
NTOX	Exponent for Tox ratio	–	1
PIGCD	Parameter for Igc partition	–	1
POXEDGE	Factor for the gate edge Tox	–	1
TOXREF	Target tox value	m	3e-09
VFBSDOFF	S/D flatband voltage offset	V	0
Asymmetric and Bias-Dependent R_{ds} Parameters			
PRWB	Body-effect on parasitic resistance	V^{-1}	0
PRWG	Gate-bias effect on parasitic resistance	V^{-1}	1
RDSW	Source-drain resistance per width	$\Omega\ \mu$m	200
RDSWMIN	Source-drain resistance per width at high Vg	$\Omega\ \mu$m	0
RDW	Drain resistance per width	$\Omega\ \mu$m	100
RDWMIN	Drain resistance per width at high Vg	$\Omega\ \mu$m	0
RSW	Source resistance per width	$\Omega\ \mu$m	100
RSWMIN	Source resistance per width at high Vg	$\Omega\ \mu$m	0
WR	Width dependence of rds	–	1
Impact Ionization Current Parameters			

Table 2.84: BSIM4 Device Model Parameters

Parameter	Description	Units	Default
ALPHA0	substrate current model parameter	m/V	0
ALPHA1	substrate current model parameter	V^{-1}	0
BETA0	substrate current model parameter	V^{-1}	0
Gate-induced Drain Leakage Model Parameters			
AGIDL	Pre-exponential constant for GIDL	Ω^{-1}	0
AGISL	Pre-exponential constant for GISL	Ω^{-1}	0
BGIDL	Exponential constant for GIDL	V/m	2.3e+09
BGISL	Exponential constant for GISL	V/m	2.3e-09
CGIDL	Parameter for body-bias dependence of GIDL	V^3	0.5
CGISL	Parameter for body-bias dependence of GISL	V^3	0.5
EGIDL	Fitting parameter for Bandbending	V	0.8
EGISL	Fitting parameter for Bandbending	V	0.8

Level 18 MOSFET Tables (VDMOS)

The vertical double-diffused power MOSFET model is based on the uniform charge control model (UCCM) developed at Rensselaer Polytechnic Institute [11]. The VDMOS current-voltage characteristics are described by a single, continuous analytical expression for all regimes of operation. The physics-based model includes effects such as velocity saturation in the channel, drain induced barrier lowering, finite output conductance in saturation, the quasi-saturation effect through a bias dependent drain parasitic resistance, effects of bulk charge, and bias dependent low-field mobility. An important feature of the implementation is the utilization of a single continuous expression for the drain current, which is valid below and above threshold, effectively removing discontinuities and improving convergence properties.

The following tables give parameters for the level 18 MOSFET.

Table 2.85: Power MOSFET Device Instance Parameters

Parameter	Description	Units	Default
AD	Drain diffusion area	m^2	0
AS	Source diffusion area	m^2	0
L	Channel length	m	0
M	Multiplier for M devices connected in parallel	–	1
NRD	Multiplier for RSH to yield parasitic resistance of drain	□	1
NRS	Multiplier for RSH to yield parasitic resistance of source	□	1
PD	Drain diffusion perimeter	m	0
PS	Source diffusion perimeter	m	0
TEMP	Device temperature	°C	Ambient Temperature
W	Channel width	m	0

Table 2.86: Power MOSFET Device Model Parameters

Parameter	Description	Units	Default
AI		–	2e+09
ALPHA	Parameter accounting for the threshold dependence on the channel potential	–	0
ARTD		–	0
BI		–	8e+08
BRTD		–	0.035
CBD	Zero-bias bulk-drain p-n capacitance	F	0
CBS	Zero-bias bulk-source p-n capacitance	F	0

Table 2.86: Power MOSFET Device Model Parameters

Parameter	Description	Units	Default
CGBO	Gate-bulk overlap capacitance/channel length	F/m	0
CGDO	Gate-drain overlap capacitance/channel width	F/m	0
CGSO	Gate-source overlap capacitance/channel width	F/m	0
CJ	Bulk p-n zero-bias bottom capacitance/area	F/m^2	0
CJSW	Bulk p-n zero-bias sidewall capacitance/area	F/m^2	0
CRTD		–	0.1472
CV	Charge model storage selector	–	1
CVE	Meyer-like capacitor model selector	–	1
D1AF	Drain-source diode flicker noise exponent	–	1
D1BV	Drain-source diode reverse breakdown voltage	V	1e+99
D1CJO	Drain-source diode junction capacitance	F	0
D1EG	Drain-source diode activation energy	eV	1.11
D1FC	Drain-source diode forward bias depletion capacitance	–	0.5
D1IBV	Drain-source diode current at breakdown voltage	A	0.001
D1IKF	Drain-source diode high injection knee currrent	A	0
D1IS	Drain-Source diode saturation current	A	1e-14
D1ISR	Drain-source diode recombination saturation current	A	0
D1KF	Drain-source diode flicker noise coefficient	–	0
D1M	Drain-source diode grading coefficient	–	0.5
D1N	Drain-source diode emission coefficient	–	1
D1NR	Drain-source diode recombination emission coefficient	–	2
D1RS	Drain-source diode ohmic resistance	Ω	0
D1TNOM	Drain-source diode nominal temperature	°C	300.15
D1TT	Drain-source diode transit time	s	0
D1VJ	Drain-source diode junction potential	V	1
D1XTI	Drain-source diode sat. current temperature exponent	–	3
DELMAX		–	0.9
DELTA	Transition width parameter	–	5
DRIFTPARAMA	Drift region resistance intercept parameter	Ω	0.08
DRIFTPARAMB	Drift region resistance slope parameter	$\Omega\ V^{-1}$	0.013
DRTD		–	0.0052
ETA	Subthreshold ideality factor	–	1.32

Table 2.86: Power MOSFET Device Model Parameters

Parameter	Description	Units	Default
FC	Coefficient for forward-bias depletion capacitance formula	–	0.5
FPE	Charge partitioning scheme selector	–	1
GAMMAL0	Body effect constant in front of linear term	–	0
GAMMAS0	Body effect constant in front of square root term	$V^{-1/2}$	0.5
IS	Bulk p-n saturation current	A	1e-14
ISUBMOD		–	0
JS	Bulk p-n saturation current density	A/m^2	0
K		–	0
KVS		–	0
KVT		–	0
L0	Gate length of nominal device	m	0
LAMBDA	Output conductance parameter	V^{-1}	0.048
LD	Lateral diffusion length	m	0
LGAMMAL	Sensitivity of gL on device length	–	0
LGAMMAS	Sensitivity of gS on device length	$V^{-1/2}$	0
LS		–	3.5e-08
M	Knee shape parameter	–	4
MC		–	3
MCV	Transition width parameter used by the charge partitioning scheme	–	10
MD		–	2
MDTEMP		–	0
MJ	Bulk p-n bottom grading coefficient	–	0.5
MJSW	Bulk p-n sidewall grading coefficient	–	0.5
MTH		–	0
N2		–	1
NRTD		–	0.115
NSS	Surface state density	cm^{-2}	0
NSUB	Substrate doping density	cm^{-3}	0
PB	Bulk p-n bottom potential	V	0.8
PHI	Surface potential	V	0.6
RD	Drain ohmic resistance	Ω	0
RDSSHUNT	Drain-source shunt resistance	Ω	0
RG	Gate ohmic resistance	Ω	0

Table 2.86: Power MOSFET Device Model Parameters

Parameter	Description	Units	Default
RS	Source ohmic resistance	Ω	0
RSH	Drain,source diffusion sheet resistance	Ω	0
RSUB		–	0
SIGMA0	DIBL parameter	–	0.048
TEMPMODEL	Specifies the type of parameter interpolation over temperature	–	'NONE'
THETA	Mobility degradation parameter	m/V	0
TNOM	Nominal device temperature	°C	Ambient Tempera-ture
TOX	Gate oxide thickness	m	1e-07
TPG	Gate material type (-1 = same as substrate, 0 = aluminum,1 = opposite of substrate)	–	1
TS		–	0
TVS		–	0
U0	Surface mobility	1/(Vcm^{2}s)	280
UO	Surface mobility	1/(Vcm^{2}s)	280
VFB	Flat band voltage	V	0
VMAX	Maximum drift velocity for carriers	m/s	40000
VP		–	0
VSIGMA	DIBL parameter	V	0.2
VSIGMAT	DIBL parameter	V	1.7
VTO	Zero-bias threshold voltage	V	0
WO	Gate width of nominal device	m	0
WGAMMAL	Sensitivity of gL on device width	–	0
WGAMMAS	Sensitivity of gS on device width	$V^{-1/2}$	0
XJ	Metallurgical junction depth	m	0
XQC	Charge partitioning factor	–	0.6

Level 77 MOSFET Tables (BSIM6 version 6.1.1)

Xyce includes the BSIM6 MOSFET model, version 6.1.1. Full documentation of the BSIM6 is available at its web site, `http://bsim.berkeley.edu/models/bsim6/`. Instance and model parameters for the BSIM6 are given in tables 2.87 and 2.88. These tables are generated directly from information present in the original Verilog-A implementation of the BSIM6, and lack many descriptions for the parameters. Consult the BSIM6 technical manual from the BSIM group for further details about these parameters.

Table 2.87: BSIM6 Device Instance Parameters

Parameter	Description	Units	Default
AD	Drain to Substrate Junction Area	—	0
AS	Source to Substrate Junction Area	—	0
GEOMOD	Geo dependent parasitics model	—	0
L		m	1e-05
MINZ	Minimize either D or S	—	0
NF	Number of fingers	—	1
NGCON	Number of gate contacts	—	1
NRD	Number of squares in drain	—	1
NRS	Number of squares in source	—	1
PD	Drain to Substrate Junction Perimeter	—	0
PS	Source to Substrate Junction Perimeter	—	0
RBDB	Resistance between bNode and dbNode	—	50
RBODYMOD	Distributed body R model	—	0
RBPB	Resistance between bNodePrime and bNode	—	50
RBPD	Resistance between bNodePrime and bNode	—	50
RBPS	Resistance between bNodePrime and sbNode	—	50
RBSB	Resistance between bNode and sbNode	—	50
RGATEMOD	Gate resistance model selector	—	0
RGEOMOD	Geometry-dependent source/drain resistance, 0: RSH-based, 1: Holistic	—	0
SA	Distance between OD edge from Poly from one side	—	0
SB	Distance between OD edge from Poly from other side	—	0
SC	Distance to a single well edge if ¡=0.0, turn off WPE	—	0
SCA		—	0
SCB		—	0
SCC		—	0

Table 2.87: BSIM6 Device Instance Parameters

Parameter	Description	Units	Default
SD	Distance between neighboring fingers	—	0
VFBSDOFF		—	0
W	Total width including fingers	m	1e-05
XGW	Dist from gate contact center to dev edge [m]	m	0

Table 2.88: BSIM6 Device Model Parameters

Parameter	Description	Units	Default
A1	Non-saturation effect parameter for strong inversion region	—	0
A11	Temperature dependence of A1	—	0
A2	Non-saturation effect parameter for moderate inversion region	—	0
A21	Temperature dependence of A2	—	0
ADOS	Quantum mechanical effect prefactor cum switch in inversion	—	0
AGIDL	pre-exponential coeff. for GIDL in mho	—	0
AGIDLL	Length dependence coefficient of AGIDL	—	0
AGIDLW	Width dependence coefficient of AGIDL	—	0
AGISL	pre-exponential coeff. for GISL	—	0
AGISLL	Length dependence coefficient of AGISL	—	0
AGISLW	Width dependence coefficient of AGISL	—	0
AIGBACC	Parameter for Igb	—	0.0136
AIGBINV	Parameter for Igb	—	0.0111
AIGC	Parameter for Igc	—	0
AIGCL	Length dependence coefficient of AIGC	—	0
AIGCW	Width dependence coefficient of AIGC	—	0
AIGD	Parameter for Igs d	—	0
AIGDL	Length dependence coefficient of AIGD	—	0
AIGDW	Width dependence coefficient of AIGD	—	0
AIGS	Parameter for Igs d	—	0
AIGSL	Length dependence coefficient of AIGS	—	0
AIGSW	Width dependence coefficient of AIGS	—	0
ALPHA0	first parameter of Iii, m/V	—	0
ALPHA0L	Length dependence coefficient of ALPHA0	—	0
ALPHA0LEXP	Length dependence exponent coefficient of ALPHA0	—	1

Table 2.88: BSIM6 Device Model Parameters

Parameter	Description	Units	Default
ASYMMOD	0: Asymmetry Model turned off - forward mode parameters used, 1: Asymmetry Model turned on	—	0
AT	Temperature coefficient for saturation velocity	—	-0.00156
ATL	Length Scaling parameter for AT	—	0
BDOS	Charge centroid parameter - slope of CV curve under QME in inversion	—	1
BETA0	Vds dependent parameter of Iii, 1/V	—	0
BG0SUB	Band gap of substrate at 300.15K	—	1.17
BGIDL	exponential coeff. for GIDL in	—	2.3e+09
BGISL	exponential coeff. for GISL	—	0
BIGBACC	Parameter for Igb	—	0.00171
BIGBINV	Parameter for Igb	—	0.000949
BIGC	Parameter for Igc	—	0
BIGD	Parameter for Igs d	—	0
BIGS	Parameter for Igs d	—	0
BINUNIT	Unit of L and W for Binning, 1 : micro-meter, 0 : default	—	1
BVD	Drain diode breakdown voltage	—	0
BVS	Source diode breakdown voltage	—	10
CDSCB	body-bias sensitivity of sub-threshold slope	—	0
CDSCBEDGE		—	0
CDSCBL	Length dependence coefficient of CDSCB	—	0
CDSCBLEXP	Length dependence exponent coefficient of CDSCB	—	1
CDSCD	drain-bias sensitivity of sub-threshold slope	—	1e-09
CDSCDEDGE		—	0
CDSCDL	Length dependence coefficient of CDSCD	—	0
CDSCDLEXP	Length dependence exponent coefficient of CDSCD	—	1
CDSCDLR	Length dependence coefficient of CDSCD	—	0
CDSCDR	drain-bias sensitivity of sub-threshold slope	—	0
CF	Outer Fringe Cap	F	0
CFRCOEFF	Coefficient for Outer Fringe Cap	—	1
CGBO	Gate - Body overlap capacitance	—	0
CGDL		—	0
CGDO	Gate - Drain overlap capacitance	—	0

Table 2.88: BSIM6 Device Model Parameters

Parameter	Description	Units	Default
CGIDL	exponential coeff. for GIDL in V/m	—	0.5
CGISL	exponential coeff. for GISL	—	0
CGSL		—	0
CGSO	Gate - Source overlap capacitance	—	0
CIGBACC	Parameter for Igb	—	0.075
CIGBINV	Parameter for Igb	—	0.006
CIGC	Parameter for Igc	—	0
CIGD	Parameter for Igs d	—	0
CIGS	Parameter for Igs d	—	0
CIT	parameter for interface trap	—	0
CITEDGE		—	0
CJD	Unit area drain-side junction capacitance at zero bias	—	0
CJS	Unit area source-side junction capacitance at zero bias	—	0.0005
CJSWD	Unit length drain-side sidewall junction capacitance at zero bias	—	0
CJSWGD	Unit length drain-side gate sidewall junction capacitance at zero bias	—	0
CJSWGS	Unit length source-side gate sidewall junction capacitance at zero bias	—	0
CJSWS	Unit length source-side sidewall junction capacitance at zero bias	—	5e-10
CKAPPAD		—	0.6
CKAPPAS		—	0.6
COVMOD	0: Use Bias-independent Overlap Capacitances, 1: Use Bias-dependent Overlap Capacitances	—	0
CTH0	Thermal capacitance	—	1e-05
CVMOD	0: Consistent IV-CV, 1: Different IV-CV	—	0
DELTA	Smoothing function factor for Vdsat	—	0.125
DELTAL	Length dependence coefficient of DELTA	—	0
DELTALEXP	Length dependence exponent coefficient of DELTA	—	1
DELVT0		—	0
DGAMMAEDGE		—	0
DGAMMAEDGEL		—	0
DGAMMAEDGELEXP		—	1

Table 2.88: BSIM6 Device Model Parameters

Parameter	Description	Units	Default
DLBIN		—	0
DLC	delta L for CV	—	0
DLCIG	Delta L for Ig model [m]	m	0
DLCIGD	Delta L for Ig model [m]	m	0
DMCG	Distance of Mid-Contact to Gate edge	m	0
DMCGT	Dist of Mid-Contact to Gate edge in Test	m	0
DMCI	Distance of Mid-Contact to Isolation	m	0
DMDG	Distance of Mid-Diffusion to Gate edge	m	0
DSUB	Length scaling exponent for DIBL	—	1
DTEMP	Offset of Device Temperature	—	0
DTOX	Difference between effective dielectric thickness	—	0
DVT0EDGE		—	2.2
DVT1EDGE		—	0.53
DVT2EDGE	Body-bias coefficient for SCE effect for Edge FET	—	0
DVTEDGE	Vth shift for Edge FET	—	0
DVTP0	DITS	—	0
DVTP1	DITS	—	0
DVTP2	DITS	—	0
DVTP3	DITS	—	0
DVTP4	DITS	—	0
DVTP5	DITS	—	0
DWBIN		—	0
DWC	delta W for CV	—	0
DWJ	delta W for S/D junctions	—	0
EASUB	Electron affinity of substrate	—	4.05
EDGEFET	0: Edge FET Model Off, 1: Edge FET Model ON	—	1
EF	Flicker Noise frequency exponent	—	1
EGIDL	band bending parameter for GIDL	—	0.8
EGISL	band bending parameter for GISL	—	0
EIGBINV	Parm for the Si bandgap for Igbinv	—	1.1
EM		—	4.1e+07
EPSROX	Relative dielectric constant of the gate dielectric	—	3.9
EPSRSUB	Relative dielectric constant of the channel material	—	11.9

Table 2.88: BSIM6 Device Model Parameters

Parameter	Description	Units	Default
ETA0	DIBL coefficient	—	0.08
ETA0EDGE		—	0
ETA0R	DIBL coefficient	—	0
ETAB	Body bias coefficient for subthreshold DIBL effect	—	-0.07
ETABEDGE		—	0
ETABEXP	Exponent coefficient of ETAB	—	1
ETAMOB	Effective field parameter (should be kept close to 1)	—	1
ETAQM	Bulk charge coefficient for charge centroid in inversion	—	0.54
EU	Mobility reduction exponent	—	1.5
EUL	Length dependence coefficient of EU	—	0
EULEXP	Length dependence exponent coefficient of EU	—	1
EUW	Width dependence coefficient of EU	—	0
EUWEXP	Width dependence exponent coefficient of EU	—	1
EUWL	Width-Length dependence coefficient of EU	—	0
EUWLEXP	Width-Length dependence coefficient of EU	—	1
FPROUT		—	0
FPROUTL	Length dependence coefficient of FPROUT	—	0
FPROUTLEXP	Length dependence exponent coefficient of FPROUT	—	1
GBMIN	Minimum body conductance	—	1e-12
GEOMOD	Geo dependent parasitics model	—	0
GIDLMOD	0: Turn off GIDL Current, 1: Turn on GIDL Current	—	0
IGBMOD	0: Turn off Igb, 1: Turn on Igb	—	0
IGCMOD	0: Turn off Igc, Igs and Igd, 1: Turn on Igc, Igs and Igd	—	0
IGT	Gate Current Temperature Dependence	—	2.5
IIT	Temperature coefficient for BETA0	—	0
IJTHDFWD	Forward drain diode breakdown limiting current	—	0
IJTHDREV	Reverse drain diode breakdown limiting current	—	0
IJTHSFWD	Forward source diode breakdown limiting current	—	0.1
IJTHSREV	Reverse source diode breakdown limiting current	—	0.1
JSD	Bottom drain junction reverse saturation current density	—	0

Table 2.88: BSIM6 Device Model Parameters

Parameter	Description	Units	Default
JSS	Bottom source junction reverse saturation current density	—	0.0001
JSWD	Unit length reverse saturation current for sidewall drain junction	—	0
JSWGD	Unit length reverse saturation current for gate-edge sidewall drain junction	—	0
JSWGS	Unit length reverse saturation current for gate-edge sidewall source junction	—	0
JSWS	Unit length reverse saturation current for sidewall source junction	—	0
JTSD	Bottom drain junction trap-assisted saturation current density	—	0
JTSS	Bottom source junction trap-assisted saturation current density	—	0
JTSSWD	Unit length trap-assisted saturation current for sidewall drain junction	—	0
JTSSWGD	Unit length trap-assisted saturation current for gate-edge sidewall drain junction	—	0
JTSSWGS	Unit length trap-assisted saturation current for gate-edge sidewall source junction	—	0
JTSSWS	Unit length trap-assisted saturation current for sidewall source junction	—	0
JTWEFF	Trap assisted tunneling current width dependence	—	0
K1	First-order body-bias Vth shift due to Vertical Non-uniform doping	—	0
K1L	Length dependence coefficient of K1	—	0
K1LEXP	Length dependence exponent coefficient of K1	—	1
K1W	Width dependence coefficient of K1	—	0
K1WEXP	Width dependence exponent coefficient of K1	—	1
K1WL	Width-Length dependence coefficient of K1	—	0
K1WLEXP	Width-Length dependence exponent coefficient of K1	—	1
K2	Vth shift due to Vertical Non-uniform doping	—	0
K2L	Length dependence coefficient of K2	—	0
K2LEXP	Length dependence exponent coefficient of K2	—	1
K2W	Width dependence coefficient of K2	—	0
K2WE		—	0
K2WEXP	Width dependence exponent coefficient of K2	—	1

Table 2.88: BSIM6 Device Model Parameters

Parameter	Description	Units	Default
K2WL	Width-Length dependence coefficient of K2	—	0
K2WLEXP	Width-Length dependence exponent coefficient of K2	—	1
KT1	Temperature coefficient for Vth	—	-0.11
KT1EDGE		—	0
KT1EXP	Temperature coefficient for Vth	—	1
KT1EXPEDGE		—	0
KT1L	Temperature coefficient for Vth	—	0
KT1LEDGE		—	0
KT2	Temperature coefficient for Vth	—	0.022
KT2EDGE		—	0
KU0	Mobility degradation/enhancement Parameter for Stress Effect	—	0
KU0WE		—	0
KVSAT	Saturation Velocity degradation/enhancement Parameter for Stress Effect	—	0
KVTH0	Threshold Shift parameter for stress effect	—	0
KVTH0WE		—	0
L		m	1e-05
LA1		—	0
LA11		—	0
LA2		—	0
LA21		—	0
LAGIDL		—	0
LAGISL		—	0
LAIGBACC		—	0
LAIGBINV		—	0
LAIGC		—	0
LAIGD		—	0
LAIGS		—	0
LALPHA0		—	0
LAT		—	0
LBETA0		—	0
LBGIDL		—	0
LBGISL		—	0
LBIGBACC		—	0

Table 2.88: BSIM6 Device Model Parameters

Parameter	Description	Units	Default
LBIGBINV		—	0
LBIGC		—	0
LBIGD		—	0
LBIGS		—	0
LCDSCB		—	0
LCDSCD		—	0
LCDSCDR		—	0
LCF		F	0
LCGDL		—	0
LCGIDL		—	0
LCGISL		—	0
LCGSL		—	0
LCIGBACC		—	0
LCIGBINV		—	0
LCIGC		—	0
LCIGD		—	0
LCIGS		—	0
LCIT		—	0
LCKAPPAD		—	0
LCKAPPAS		—	0
LDELTA		—	0
LDLCIG		—	0
LDLCIGD		—	0
LDVTP0		—	0
LDVTP1		—	0
LDVTP2		—	0
LDVTP3		—	0
LDVTP4		—	0
LDVTP5		—	0
LEGIDL		—	0
LEGISL		—	0
LEIGBINV		—	0
LETA0		—	0
LETA0R		—	0
LETAB		—	0

Table 2.88: BSIM6 Device Model Parameters

Parameter	Description	Units	Default
LEU		—	0
LFPROUT		—	0
LIGT		—	0
LIIT		—	0
LINT	delta L for IV	—	0
LINTNOI		—	0
LK1		—	0
LK2		—	0
LK2WE		—	0
LKT1		—	0
LKT2		—	0
LKU0	Length Dependence of KU0	—	0
LKU0WE		—	0
LKVTH0	Length dependence of KVTH0	—	0
LKVTH0WE		—	0
LL		—	0
LLC		—	0
LLN		—	1
LLODKU0	Length Parameter for u0 stress effect	—	0
LLODVTH	Length Parameter for Vth stress effect	—	0
LLONG	L of extracted Long channel device	m	1e-05
LMLT	Length Shrinking Parameter	—	1
LNDEP		—	0
LNDEPCV		—	0
LNFACTOR		—	0
LNGATE		—	0
LNIGBACC		—	0
LNIGBINV		—	0
LNSD		—	0
LNTOX		—	0
LODETA0	eta0 modification foator for stress effect	—	0
LODK2	K2 shift modification factor for stress effect	—	0
LP1	Mobility channel length exponential coefficent	—	1e-08
LP2	Mobility channel length exponential coefficent	—	1e-08
LPCLM		—	0

Table 2.88: BSIM6 Device Model Parameters

Parameter	Description	Units	Default
LPCLMCV		—	0
LPCLMR		—	0
LPDIBLC		—	0
LPDIBLCB		—	0
LPDIBLCR		—	0
LPDITS		—	0
LPDITSD		—	0
LPHIN		—	0
LPOXEDGE		—	0
LPRT		—	0
LPRWB		—	0
LPRWG		—	0
LPSAT		—	0
LPSATB		—	0
LPSATR		—	0
LPSCBE1		—	0
LPSCBE2		—	0
LPTWG		—	0
LPTWGR		—	0
LPTWGT		—	0
LPVAG		—	0
LRDSW		—	0
LRDSWMIN		—	0
LRDW		—	0
LRDWMIN		—	0
LRSW		—	0
LRSWMIN		—	0
LTGIDL		—	0
LU0		—	0
LU0R		—	0
LUA		—	0
LUA1		—	0
LUAR		—	0
LUC		—	0
LUC1		—	0

Table 2.88: BSIM6 Device Model Parameters

Parameter	Description	Units	Default
LUCR		—	0
LUCS		—	0
LUCSR		—	0
LUCSTE		—	0
LUD		—	0
LUD1		—	0
LUDR		—	0
LUTE		—	0
LVFB		—	0
LVFBCV		—	0
LVSAT		—	0
LVSATCV		—	0
LVSATR		—	0
LW		—	0
LWC		—	0
LWL		—	0
LWLC		—	0
LWN		—	1
LWR		—	0
LXJ		—	0
MJD	Drain bottom junction capacitance grading coefficient	—	0
MJS	Source bottom junction capacitance grading coefficient	—	0.5
MJSWD	Drain sidewall junction capacitance grading coefficient	—	0
MJSWGD	Drain-side gate sidewall junction capacitance grading coefficient	—	0
MJSWGS	Source-side gate sidewall junction capacitance grading coefficient	—	0
MJSWS	Source sidewall junction capacitance grading coefficient	—	0.33
MOBSCALE	Mobility scaling model, 0: Old Model, 1: New Model	—	0
MULU0		—	1
NDEP	Channel Doping Concentration for IV	m^{-3}	1e+24
NDEPCV	Channel Doping Concentration for CV	m^{-3}	0

Table 2.88: BSIM6 Device Model Parameters

Parameter	Description	Units	Default
NDEPCVL1	Length dependence coefficient of NDEPCV	—	0
NDEPCVL2	Length dependence coefficient of NDEPCV - For Short Channel Devices	—	0
NDEPCVLEXP1	Length dependence exponent coefficient of NDEPCV	—	0
NDEPCVLEXP2	Length dependence exponent coefficient of NDEPCV	—	0
NDEPCVW	Width dependence coefficient of NDEPCV	—	0
NDEPCVWEXP	Width dependence exponent coefficient of NDEPCV	—	0
NDEPCVWL	Width-Length dependence coefficient of NDEPCV	—	0
NDEPCVWLEXP	Width-Length dependence exponent coefficient of NDEPCV	—	0
NDEPL1	Length dependence coefficient of NDEP	—	0
NDEPL2	Length dependence of NDEP - For Short Channel Devices	—	0
NDEPLEXP1	Length dependence exponent coefficient of NDEP	—	1
NDEPLEXP2	Length dependence exponent coefficient of NDEP	—	2
NDEPW	Width dependence coefficient of NDEP	—	0
NDEPWEXP	Width dependence exponent coefficient of NDEP	—	1
NDEPWL	Width-Length dependence coefficient of NDEP	—	0
NDEPWLEXP	Width-Length dependence exponent coefficient of NDEP	—	1
NFACTOR	Sub-threshold slope factor	—	0
NFACTOREDGE		—	0
NFACTORL	Length dependence coefficient of NFACTOR	—	0
NFACTORLEXP	Length dependence exponent coefficient of NFACTOR	—	1
NFACTORW	Width dependence coefficient of NFACTOR	—	0
NFACTORWEXP	Width dependence exponent coefficient of NFACTOR	—	1
NFACTORWL	Width-Length dependence coefficient of NFACTOR	—	0
NFACTORWLEXP	Width-Length dependence exponent coefficient of NFACTOR	—	1
NGATE	Gate Doping Concentration	m^{-3}	5e+25

Table 2.88: BSIM6 Device Model Parameters

Parameter	Description	Units	Default
NGCON	Number of gate contacts	—	1
NIOSUB	Intrinsic carrier concentration of the substrate at 300.15K	m^{-3}	1.1e+16
NIGBACC	Parameter for Igbacc slope	—	1
NIGBINV	Parameter for Igbinv slope	—	3
NJD	Drain junction emission coefficient	—	0
NJS	Source junction emission coefficient	—	1
NJTS	Non-ideality factor for JTSS	—	20
NJTSD	Non-ideality factor for JTSD	—	0
NJTSSW	Non-ideality factor for JTSSWS	—	20
NJTSSWD	Non-ideality factor for JTSSWD	—	0
NJTSSWG	Non-ideality factor for JTSSWGS	—	20
NJTSSWGD	Non-ideality factor for JTSSWGD	—	0
NOIA		—	6.25e+40
NOIB		—	3.125e+25
NOIC		—	8.75e+08
NSD	S/D Doping Concentration	m^{-3}	1e+26
NTNOI		—	1
NTOX	Exponent for Tox ratio	—	1
PA1		—	0
PA11		—	0
PA2		—	0
PA21		—	0
PAGIDL		—	0
PAGISL		—	0
PAIGBACC		—	0
PAIGBINV		—	0
PAIGC		—	0
PAIGD		—	0
PAIGS		—	0
PALPHA0		—	0
PAT		—	0
PBD	Drain-side bulk junction built-in potential	—	0
PBETA0		—	0
PBGIDL		—	0

Table 2.88: BSIM6 Device Model Parameters

Parameter	Description	Units	Default
PBGISL		—	0
PBIGBACC		—	0
PBIGBINV		—	0
PBIGC		—	0
PBIGD		—	0
PBIGS		—	0
PBS	Source-side bulk junction built-in potential	—	1
PBSWD	Built-in potential for Drain-side sidewall junction capacitance	—	0
PBSWGD	Built-in potential for Drain-side gate sidewall junction capacitance	—	0
PBSWGS	Built-in potential for Source-side gate sidewall junction capacitance	—	0
PBSWS	Built-in potential for Source-side sidewall junction capacitance	—	1
PCDSCB		—	0
PCDSCD		—	0
PCDSCDR		—	0
PCF		F	0
PCGDL		—	0
PCGIDL		—	0
PCGISL		—	0
PCGSL		—	0
PCIGBACC		—	0
PCIGBINV		—	0
PCIGC		—	0
PCIGD		—	0
PCIGS		—	0
PCIT		—	0
PCKAPPAD		—	0
PCKAPPAS		—	0
PCLM	CLM prefactor	—	0
PCLMCV	CLM parameter for CV	—	0
PCLMCVL		—	0
PCLMCVLEXP		—	0
PCLMG	CLM prefactor gate voltage dependence	—	0

Table 2.88: BSIM6 Device Model Parameters

Parameter	Description	Units	Default
PCLML	Length dependence coefficient of PCLM	—	0
PCLMLEXP	Length dependence exponent coefficient of PCLM	—	1
PCLMR	CLM prefactor	—	0
PDELTA		—	0
PDIBLC	parameter for DIBL effect on Rout	—	0
PDIBLCB	parameter for DIBL effect on Rout	—	0
PDIBLCL	Length dependence coefficient of PDIBLC	—	0
PDIBLCLEXP	Length dependence exponent coefficient of PDIBLC	—	1
PDIBLCLEXPR	Length dependence exponent coefficient of PDIBLC	—	0
PDIBLCLR	Length dependence coefficient of PDIBLC	—	0
PDIBLCR	parameter for DIBL effect on Rout	—	0
PDITS	Coefficient for drain-induced Vth shifts	—	0
PDITSD	Vds dep of drain-induced Vth shifts	—	0
PDITSL	L dep of drain-induced Vth shifts	—	0
PDLCIG		—	0
PDLCIGD		—	0
PDVTP0		—	0
PDVTP1		—	0
PDVTP2		—	0
PDVTP3		—	0
PDVTP4		—	0
PDVTP5		—	0
PEGIDL		—	0
PEGISL		—	0
PEIGBINV		—	0
PERMOD	Whether PS/PD (when given) include gate-edge perimeter	—	1
PETA0		—	0
PETA0R		—	0
PETAB		—	0
PEU		—	0
PFPROUT		—	0

Table 2.88: BSIM6 Device Model Parameters

Parameter	Description	Units	Default
PHIN	Nonuniform vertical doping effect on surface potential, V	V	0.045
PIGCD	Igc, S/D partition parameter	—	1
PIGCDL	Length dependence coefficient of PIGCD	—	0
PIGT		—	0
PIIT		—	0
PK1		—	0
PK2		—	0
PK2WE		—	0
PKT1		—	0
PKT2		—	0
PKU0	Cross Term Dependence of KU0	—	0
PKU0WE		—	0
PKVTH0	Cross-term dependence of KVTH0	—	0
PKVTH0WE		—	0
PNDEP		—	0
PNDEPCV		—	0
PNFACTOR		—	0
PNGATE		—	0
PNIGBACC		—	0
PNIGBINV		—	0
PNSD		—	0
PNTOX		—	0
POXEDGE	Factor for the gate edge Tox	—	1
PPCLM		—	0
PPCLMCV		—	0
PPCLMR		—	0
PPDIBLC		—	0
PPDIBLCB		—	0
PPDIBLCR		—	0
PPDITS		—	0
PPDITSD		—	0
PPHIN		—	0
PPOXEDGE		—	0
PPRT		—	0

Table 2.88: BSIM6 Device Model Parameters

Parameter	Description	Units	Default
PPRWB		—	0
PPRWG		—	0
PPSAT		—	0
PPSATB		—	0
PPSATR		—	0
PPSCBE1		—	0
PPSCBE2		—	0
PPTWG		—	0
PPTWGR		—	0
PPTWGT		—	0
PPVAG		—	0
PRDSW		—	0
PRDSWMIN		—	0
PRDW		—	0
PRDWMIN		—	0
PRSW		—	0
PRSWMIN		—	0
PRT	Temperature coefficient for resistance	—	0
PRWB	Body bias dependence of resistance	—	0
PRWBL	Length dependence coefficient of PPRWB	—	0
PRWBLEXP	Length dependence exponent coefficient of PPRWB	—	1
PRWG	gate bias dependence of S/D extension resistance	—	1
PSAT	Gmsat variation with gate bias	—	1
PSATB	Body bias effect on Idsat	—	0
PSATL		—	0
PSATLEXP		—	1
PSATR	Gmsat variation with gate bias	—	0
PSATX		—	1
PSCBE1	Substrate current body-effect coeff	—	4.24e+08
PSCBE2	Substrate current body-effect coeff	—	1e-08
PTGIDL		—	0
PTWG	Idsat variation with gate bias	—	0
PTWGL	Length dependence coefficient of PTWG	—	0

Table 2.88: BSIM6 Device Model Parameters

Parameter	Description	Units	Default
PTWGLEXP	Length dependence exponent coefficient of PTWG	—	1
PTWGLEXPR	Length dependence exponent coefficient of PTWG	—	0
PTWGLR	Length dependence coefficient of PTWG	—	0
PTWGR	Idsat variation with gate bias	—	0
PTWGT	Temperature coefficient for PTWG	—	0
PTWGTL	Length Scaling parameter for PTWGT	—	0
PU0		—	0
PU0R		—	0
PUA		—	0
PUA1		—	0
PUAR		—	0
PUC		—	0
PUC1		—	0
PUCR		—	0
PUCS		—	0
PUCSR		—	0
PUCSTE		—	0
PUD		—	0
PUD1		—	0
PUDR		—	0
PUTE		—	0
PVAG	Vg dependence of early voltage	—	1
PVFB		—	0
PVFBCV		—	0
PVSAT		—	0
PVSATCV		—	0
PVSATR		—	0
PWR		—	0
PXJ		—	0
QM0	Charge centroid parameter - starting point for QME in inversion	—	0.001
RBDB	Resistance between bNode and dbNode	—	50
RBDBX0	Scaling prefactor for RBDBX	—	100
RBDBY0	Scaling prefactor for RBDBY	—	100

Table 2.88: BSIM6 Device Model Parameters

Parameter	Description	Units	Default
RBODYMOD	Distributed body R model	—	0
RBPB	Resistance between bNodePrime and bNode	—	50
RBPBX0		—	100
RBPBXL	Length Scaling parameter for RBPBX	—	0
RBPBXNF	Number of fingers Scaling parameter for RBPBX	—	0
RBPBXW	Width Scaling parameter for RBPBX	—	0
RBPBY0	Scaling prefactor for RBPBY	—	100
RBPBYL	Length Scaling parameter for RBPBY	—	0
RBPBYNF	Number of fingers Scaling parameter for RBPBY	—	0
RBPBYW	Width Scaling parameter for RBPBY	—	0
RBPD	Resistance between bNodePrime and bNode	—	50
RBPD0		—	50
RBPDL	Length Scaling parameter for RBPD	—	0
RBPDNF	Number of fingers Scaling parameter for RBPD	—	0
RBPDW	Width Scaling parameter for RBPD	—	0
RBPS	Resistance between bNodePrime and sbNode	—	50
RBPS0	Scaling prefactor for RBPS 50 Ohms	—	50
RBPSL		—	0
RBPSNF		—	0
RBPSW		—	0
RBSB	Resistance between bNode and sbNode	—	50
RBSBX0	Scaling prefactor for RBSBX	—	100
RBSBY0	Scaling prefactor for RBSBY	—	100
RBSDBXL	Length Scaling parameter for RBSBX and RBDBX	—	0
RBSDBXNF	Number of fingers Scaling parameter for RBSBX and RBDBX	—	0
RBSDBXW	Width Scaling parameter for RBSBX and RBDBX	—	0
RBSDBYL	Length Scaling parameter for RBSBY and RBDBY	—	0
RBSDBYNF	Number of fingers Scaling parameter for RBSBY and RBDBY	—	0
RBSDBYW	Width Scaling parameter for RBSBY and RBDBY	—	0
RDSMOD	0: Internal bias dependent and external bias independent s/d resistance model, 1: External s/d resistance model, 2: Internal s/d resistance model	—	0

Table 2.88: BSIM6 Device Model Parameters

Parameter	Description	Units	Default
RDSW	zero bias Resistance (RDSMOD=0 and RDSMOD=2)	—	20
RDSWL	Geometrical scaling of RDSW (RDSMOD=0 and RDSMOD=2)	—	0
RDSWLEXP	Geometrical scaling of RDSW (RDSMOD=0 and RDSMOD=2)	—	1
RDSWMIN	S/D Resistance per unit width at high Vgs (RDSMOD=0 and RDSMOD=2)	—	0
RDW	zero bias Drain Resistance (RDSMOD=1)	—	0
RDWL	Geometrical scaling of RDW (RDSMOD=1)	—	0
RDWLEXP	Geometrical scaling of RDW (RDSMOD=1)	—	0
RDWMIN	Drain Resistance per unit width at high Vgs (RDSMOD=1)	—	0
RGATEMOD	Gate resistance model selector	—	0
RGEOMOD	Geometry-dependent source/drain resistance, 0: RSH-based, 1: Holistic	—	0
RNOIA	TNOIMOD = 1	—	0.577
RNOIB	TNOIMOD = 1	—	0.5164
RNOIC	TNOIMOD = 1	—	0.395
RSH	Source-drain sheet resistance	—	0
RSHG	Gate sheet resistance	—	0.1
RSW	zero bias Source Resistance (RDSMOD=1)	—	10
RSWL	Geometrical scaling of RSW (RDSMOD=1)	—	0
RSWLEXP	Geometrical scaling of RSW (RDSMOD=1)	—	1
RSWMIN	Source Resistance per unit width at high Vgs (RDSMOD=1)	—	0
RTHO	Thermal resistance	—	0
SA	Distance between OD edge from Poly from one side	—	0
SAREF	Reference distance between OD edge from Poly from one side	—	1e-06
SB	Distance between OD edge from Poly from other side	—	0
SBREF	Reference distance between OD edge from Poly from other side	—	1e-06
SC	Distance to a single well edge if ¡=0.0, turn off WPE	—	0
SCA		—	0
SCB		—	0

Table 2.88: BSIM6 Device Model Parameters

Parameter	Description	Units	Default
SCC		—	0
SCREF		—	1e-06
SD	Distance between neighboring fingers	—	0
SHMOD	0 : Self heating model OFF, 1 : Self heating model ON	—	0
STETA0	eta0 shift related to Vth0 change	—	0
STK2	K2 shift factor related to Vth change	—	0
TBGASUB	Bandgap Temperature Coefficient	—	0.000473
TBGBSUB	Bandgap Temperature Coefficient	—	636
TCJ	Temperature coefficient for CJS/CJD	—	0
TCJSW	Temperature coefficient for CJSWS/CJSWD	—	0
TCJSWG	Temperature coefficient for CJSWGS/CJSWGD	—	0
TDELTA	Temperature coefficient for DELTA	—	0
TETA0	Temperature coefficient for ETA0	—	0
TETA0EDGE		—	0
TGIDL	Temperature coefficient for GIDL/GISL	—	0
TKU0	Temperature Coefficient for KU0	—	0
TNFACTOR	Temperature exponent for NFACTOR	—	0
TNFACTOREDGE		—	0
TNJTS	Temperature coefficient for NJTS	—	0
TNJTSD	Temperature coefficient for NJTSD	—	0
TNJTSSW	Temperature coefficient for NJTSSW	—	0
TNJTSSWD	Temperature coefficient for NJTSSWD	—	0
TNJTSSWG	Temperature coefficient for NJTSSWG	—	0
TNJTSSWGD	Temperature coefficient for NJTSSWGD	—	0
TNOIA	TNOIMOD = 1	—	0
TNOIB	TNOIMOD = 1	—	0
TNOIC	Correlation coefficient	—	0
TNOIMOD	Thermal noise model selector	—	0
TNOM	Temperature at which the model was extracted	—	27
TOXE	Effective gate dielectric thickness relative to SiO2, m	m	3e-09
TOXP	Physical gate dielectric thickness,If not given, TOXP is calculated from TOXE and DTOX	m	0
TOXREF	Target tox value	m	3e-09
TPB	Temperature coefficient for PBS/PBD	—	0

Table 2.88: BSIM6 Device Model Parameters

Parameter	Description	Units	Default
TPBSW	Temperature coefficient for PBSWS/PBSWD	—	0
TPBSWG	Temperature coefficient for PBSWGS/PBSWGD	—	0
TYPE		—	1
U0		—	0.067
U0L	Length dependence coefficient of U0L	—	0
U0LEXP	Length dependence exponent coefficient of U0L	—	1
U0R		—	0
UA	Mobility reduction coefficient	—	0.001
UA1	Temperature coefficient for UA	—	0.001
UA1L	Length Scaling parameter for UA1	—	0
UAL	Length dependence coefficient of UA	—	0
UALEXP	Length dependence exponent coefficient of UA	—	1
UAR	Mobility reduction coefficient	—	0
UAW	Width dependence coefficient of UA	—	0
UAWEXP	Width dependence exponent coefficient of UA	—	1
UAWL	Width-Length dependence coefficient of UA	—	0
UAWLEXP	Width-Length dependence coefficient of UA	—	1
UC	Mobility reduction with body bias	—	0
UC1	Temperature coefficient for UC	—	5.6e-11
UCL	Length dependence coefficient of UC	—	0
UCLEXP	Length dependence exponent coefficient of UC	—	1
UCR	Mobility reduction with body bias	—	0
UCS	Coulombic scattering parameter	—	2
UCSR	Coulombic scattering parameter	—	0
UCSTE	Temperature coefficient for UCS	—	-0.004775
UCW	Width dependence coefficient of UC	—	0
UCWEXP	Width dependence exponent coefficient of UC	—	1
UCWL	Width-Length dependence coefficient of UC	—	0
UCWLEXP	Width-Length dependence exponent coefficient of UC	—	1
UD	Coulombic scattering parameter	—	0.001
UD1	Temperature coefficient for UD	—	0
UD1L	Length Scaling parameter for UD1	—	0
UDL	Length dependence coefficient of UD	—	0
UDLEXP	Length dependence exponent coefficient of UD	—	1

Table 2.88: BSIM6 Device Model Parameters

Parameter	Description	Units	Default
UDR	Coulombic scattering parameter	—	0
UP1	Mobility channel length coefficent	—	0
UP2	Mobility channel length coefficent	—	0
UTE	Mobility temperature exponent	—	-1.5
UTEL	Length Scaling parameter for UTE	—	0
VFB	Flat band voltage	V	-0.5
VFBCV	Flat band voltage for CV	—	0
VFBCVL	Length dependence coefficient of VFBCV	—	0
VFBCVLEXP	Length dependence exponent coefficient of VFBCV	—	1
VFBCVW	Width dependence coefficient of VFBCV	—	0
VFBCVWEXP	Width dependence exponent coefficient of VFBCV	—	1
VFBCVWL	Width-Length dependence coefficient of VFBCV	—	0
VFBCVWLEXP	Width-Length dependence coefficient of VFBCV	—	1
VFBSDOFF		—	0
VSAT	Saturation Velocity	—	100000
VSATCV	VSAT parameter for CV	—	0
VSATCVL		—	0
VSATCVLEXP		—	0
VSATCVW		—	0
VSATCVWEXP		—	0
VSATCVWL		—	0
VSATCVWLEXP		—	0
VSATL	Length dependence coefficient of of VSAT	—	0
VSATLEXP	Length dependence exponent coefficient of VSAT	—	1
VSATR	Saturation Velocity	—	0
VSATW	Width dependence coefficient of of VSAT	—	0
VSATWEXP	Width dependence exponent coefficient of of VSAT	—	1
VSATWL	Width-Length dependence coefficient of of VSAT	—	0
VSATWLEXP	Width-Length dependence exponent coefficient of of VSAT	—	1
VTSD	Bottom drain junction trap-assisted current voltage dependent parameter	—	0

Table 2.88: BSIM6 Device Model Parameters

Parameter	Description	Units	Default
VTSS	Bottom source junction trap-assisted current voltage dependent parameter	—	10
VTSSWD	Unit length trap-assisted current voltage dependent parameter for sidewall drain junction	—	0
VTSSWGD	Unit length trap-assisted current voltage dependent parameter for gate-edge sidewall drain junction	—	0
VTSSWGS	Unit length trap-assisted current voltage dependent parameter for gate-edge sidewall source junction	—	10
VTSSWS	Unit length trap-assisted current voltage dependent parameter for sidewall source junction	—	10
WA1		—	0
WA11		—	0
WA2		—	0
WA21		—	0
WAGIDL		—	0
WAGISL		—	0
WAIGBACC		—	0
WAIGBINV		—	0
WAIGC		—	0
WAIGD		—	0
WAIGS		—	0
WALPHA0		—	0
WAT		—	0
WBETA0		—	0
WBGIDL		—	0
WBGISL		—	0
WBIGBACC		—	0
WBIGBINV		—	0
WBIGC		—	0
WBIGD		—	0
WBIGS		—	0
WCDSCB		—	0
WCDSCD		—	0
WCDSCDR		—	0
WCF		F	0

Table 2.88: BSIM6 Device Model Parameters

Parameter	Description	Units	Default
WCGDL		—	0
WCGIDL		—	0
WCGISL		—	0
WCGSL		—	0
WCIGBACC		—	0
WCIGBINV		—	0
WCIGC		—	0
WCIGD		—	0
WCIGS		—	0
WCIT		—	0
WCKAPPAD		—	0
WCKAPPAS		—	0
WDELTA		—	0
WDLCIG		—	0
WDLCIGD		—	0
WDVTP0		—	0
WDVTP1		—	0
WDVTP2		—	0
WDVTP3		—	0
WDVTP4		—	0
WDVTP5		—	0
WEB		—	0
WEC		—	0
WEDGE		—	1e-08
WEGIDL		—	0
WEGISL		—	0
WEIGBINV		—	0
WETA0		—	0
WETA0R		—	0
WETAB		—	0
WEU		—	0
WFPROUT		—	0
WIGT		—	0
WIIT		—	0
WINT	delta W for IV	—	0

Table 2.88: BSIM6 Device Model Parameters

Parameter	Description	Units	Default
WK1		—	0
WK2		—	0
WK2WE		—	0
WKT1		—	0
WKT2		—	0
WKU0	Width Dependence of KU0	—	0
WKU0WE		—	0
WKVTH0	Width dependence of KVTH0	—	0
WKVTH0WE		—	0
WL		—	0
WLC		—	0
WLN		—	1
WLOD	Width Parameter for Stress Effect	—	0
WLODKU0	Width Parameter for u0 stress effect	—	0
WLODVTH	Width Parameter for Vth stress effect	—	0
WMLT	Width Shrinking Parameter	—	1
WNDEP		—	0
WNDEPCV		—	0
WNFACTOR		—	0
WNGATE		—	0
WNIGBACC		—	0
WNIGBINV		—	0
WNSD		—	0
WNTOX		—	0
WPCLM		—	0
WPCLMCV		—	0
WPCLMR		—	0
WPDIBLC		—	0
WPDIBLCB		—	0
WPDIBLCR		—	0
WPDITS		—	0
WPDITSD		—	0
WPEMOD	Model flag	—	0
WPHIN		—	0
WPOXEDGE		—	0

Table 2.88: BSIM6 Device Model Parameters

Parameter	Description	Units	Default
WPRT		—	0
WPRWB		—	0
WPRWG		—	0
WPSAT		—	0
WPSATB		—	0
WPSATR		—	0
WPSCBE1		—	0
WPSCBE2		—	0
WPTWG		—	0
WPTWGR		—	0
WPTWGT		—	0
WPVAG		—	0
WR	W dependence parameter of S/D extension resistance	—	1
WRDSW		—	0
WRDSWMIN		—	0
WRDW		—	0
WRDWMIN		—	0
WRSW		—	0
WRSWMIN		—	0
WTGIDL		—	0
WTH0	Width dependence coefficient for Rth and Cth	—	0
WU0		—	0
WU0R		—	0
WUA		—	0
WUA1		—	0
WUAR		—	0
WUC		—	0
WUC1		—	0
WUCR		—	0
WUCS		—	0
WUCSR		—	0
WUCSTE		—	0
WUD		—	0
WUD1		—	0

Table 2.88: BSIM6 Device Model Parameters

Parameter	Description	Units	Default
WUDR		—	0
WUTE		—	0
WVFB		—	0
WVFBCV		—	0
WVSAT		—	0
WVSATCV		—	0
WVSATR		—	0
WW		—	0
WWC		—	0
WWIDE	W of extracted Wide channel device	m	1e-05
WWL		—	0
WWLC		—	0
WWN		—	1
WWR		—	0
WXJ		—	0
XGL	Variation in Ldrawn	m	0
XGW	Dist from gate contact center to dev edge [m]	m	0
XJ	S/D junction depth	—	1.5e-07
XJBVD	Fitting parameter for drain diode breakdown current	—	0
XJBVS	Fitting parameter for source diode breakdown current	—	1
XL	L offset for channel length due to mask/etch effect	—	0
XRCRG1	1st fitting parm the bias-dependent Rg //make it binnable	—	12
XRCRG2	2nd fitting parm the bias-dependent Rg //make it binnable	—	1
XTID	Drain junction current temperature exponent	—	0
XTIS	Source junction current temperature exponent	—	3
XTSD	Power dependence of JTSD on temperature	—	0
XTSS	Power dependence of JTSS on temperature	—	0.02
XTSSWD	Power dependence of JTSSWD on temperature	—	0
XTSSWGD	Power dependence of JTSSWGD on temperature	—	0
XTSSWGS	Power dependence of JTSSWGS on temperature	—	0.02

Table 2.88: BSIM6 Device Model Parameters

Parameter	Description	Units	Default
XTSSWS	Power dependence of JTSSWS on temperature	—	0.02
XW	W offset for channel width due to mask/etch effect	—	0

Level 102 MOSFET Tables (PSP version 102.5)

Xyce includes a legacy version of the PSP MOSFET model, version 102.5. This version is provided because the more recent 103 versions are not backward compatible with the older 102 versions, and some foundries provide model cards that use the version 102. Development of new model cards should be done using the more recent, supported versions of PSP.

Table 2.89: PSP102VA legacy MOSFET 102.5 Device Instance Parameters

Parameter	Description	Units	Default
ABDRAIN	Bottom area of drain junction	–	1e-12
ABSOURCE	Bottom area of source junction	–	1e-12
AD	Bottom area of drain junction	–	1e-12
AS	Bottom area of source junction	–	1e-12
DELVTO	Threshold voltage shift parameter	–	0
FACTUO	Zero-field mobility pre-factor	–	1
L	Design length	–	1e-05
LGDRAIN	Gate-edge length of drain junction	–	1e-06
LGSOURCE	Gate-edge length of source junction	–	1e-06
LSDRAIN	STI-edge length of drain junction	–	1e-06
LSSOURCE	STI-edge length of source junction	–	1e-06
M	Alias for MULT	–	1
MULT	Number of devices in parallel	–	1
NF	Number of fingers	–	1
NGCON	Number of gate contacts	–	1
PD	Perimeter of drain junction	–	1e-06
PS	Perimeter of source junction	–	1e-06
SA	Distance between OD-edge and poly from one side	–	0
SB	Distance between OD-edge and poly from other side	–	0
SC	Distance between OD-edge and nearest well edge	–	0
SCA	Integral of the first distribution function for scattered well dopants	–	0
SCB	Integral of the second distribution function for scattered well dopants	–	0
SCC	Integral of the third distribution function for scattered well dopants	–	0
SD	Distance between neighbouring fingers	–	0
W	Design width	–	1e-05

Table 2.89: PSP102VA legacy MOSFET 102.5 Device Instance Parameters

Parameter	Description	Units	Default
XGW	Distance from the gate contact to the channel edge	–	1e-07

Table 2.90: PSP102VA legacy MOSFET 102.5 Device Model Parameters

Parameter	Description	Units	Default
A1L	Length dependence of A1	–	0
A1O	Geometry independent impact-ionization pre-factor	–	1
A1W	Width dependence of A1	–	0
A2O	Impact-ionization exponent at TR	–	10
A3L	Length dependence of A3	–	0
A3O	Geometry independent saturation-voltage dependence of II	–	1
A3W	Width dependence of A3	–	0
A4L	Length dependence of A4	–	0
A4O	Geometry independent back-bias dependence of II	–	0
A4W	Width dependence of A4	–	0
AGIDLDW	Width dependence of GIDL pre-factor for drain side	–	0
AGIDLW	Width dependence of GIDL pre-factor	–	0
ALP1L1	Length dependence of CLM enhancement factor above threshold	–	0
ALP1L2	Second_order length dependence of ALP1	–	0
ALP1LEXP	Exponent for length dependence of ALP1	–	0.5
ALP1W	Width dependence of ALP1	–	0
ALP2L1	Length dependence of CLM enhancement factor below threshold	–	0
ALP2L2	Second_order length dependence of ALP2	–	0
ALP2LEXP	Exponent for length dependence of ALP2	–	0.5
ALP2W	Width dependence of ALP2	–	0
ALPL	Length dependence of ALP	–	0.0005
ALPLEXP	Exponent for length dependence of ALP	–	1
ALPNOI	Exponent for length offset for flicker noise	–	2
ALPW	Width dependence of ALP	–	0

Table 2.90: PSP102VA legacy MOSFET 102.5 Device Model Parameters

Parameter	Description	Units	Default
AXL	Length dependence of AX	–	0.4
AXO	Geometry independent linear/saturation transition factor	–	18
BETW1	First higher-order width scaling coefficient of BETN	–	0
BETW2	Second higher-order width scaling coefficient of BETN	–	0
BGIDLDO	GIDL probability factor at TR for drain side	–	41
BGIDLO	GIDL probability factor at TR	–	41
CBBTBOT	Band-to-band tunneling prefactor of bottom component for source-bulk junction	–	1e-12
CBBTBOTD	Band-to-band tunneling prefactor of bottom component for drain-bulk junction	–	1e-12
CBBTGAT	Band-to-band tunneling prefactor of gate-edge component for source-bulk junction	–	1e-18
CBBTGATD	Band-to-band tunneling prefactor of gate-edge component for drain-bulk junction	–	1e-18
CBBTSTI	Band-to-band tunneling prefactor of STI-edge component for source-bulk junction	–	1e-18
CBBTSTID	Band-to-band tunneling prefactor of STI-edge component for drain-bulk junction	–	1e-18
CFBO	Back-bias dependence of CF	–	0
CFL	Length dependence of DIBL-parameter	–	0
CFLEXP	Exponent for length dependence of CF	–	2
CFRDW	Outer fringe capacitance for 1 um wide channel for drain side	–	0
CFRW	Outer fringe capacitance for 1 um wide channel	–	0
CFW	Width dependence of CF	–	0
CGBOVL	Oxide capacitance for gate-bulk overlap for 1 um long channel	–	0
CGIDLDO	Back-bias dependence of GIDL for drain side	–	0
CGIDLO	Back-bias dependence of GIDL	–	0
CHIBO	Tunnelling barrier height	–	3.1
CJORBOT	Zero-bias capacitance per unit-of-area of bottom component for source-bulk junction	–	0.001
CJORBOTD	Zero-bias capacitance per unit-of-area of bottom component for drain-bulk junction	–	0.001
CJORGAT	Zero-bias capacitance per unit-of-length of gate-edge component for source-bulk junction	–	1e-09

Table 2.90: PSP102VA legacy MOSFET 102.5 Device Model Parameters

Parameter	Description	Units	Default
CJORGATD	Zero-bias capacitance per unit-of-length of gate-edge component for drain-bulk junction	–	1e-09
CJORSTI	Zero-bias capacitance per unit-of-length of STI-edge component for source-bulk junction	–	1e-09
CJORSTID	Zero-bias capacitance per unit-of-length of STI-edge component for drain-bulk junction	–	1e-09
CSL	Length dependence of CS	–	0
CSLEXP	Exponent for length dependence of CS	–	0
CSLW	Area dependence of CS	–	0
CSO	Geometry independent coulomb scattering parameter at TR	–	0
CSRHBOT	Shockley-Read-Hall prefactor of bottom component for source-bulk junction	–	100
CSRHBOTD	Shockley-Read-Hall prefactor of bottom component for drain-bulk junction	–	100
CSRHGAT	Shockley-Read-Hall prefactor of gate-edge component for source-bulk junction	–	0.0001
CSRHGATD	Shockley-Read-Hall prefactor of gate-edge component for drain-bulk junction	–	0.0001
CSRHSTI	Shockley-Read-Hall prefactor of STI-edge component for source-bulk junction	–	0.0001
CSRHSTID	Shockley-Read-Hall prefactor of STI-edge component for drain-bulk junction	–	0.0001
CSW	Width dependence of CS	–	0
CTATBOT	Trap-assisted tunneling prefactor of bottom component for source-bulk junction	–	100
CTATBOTD	Trap-assisted tunneling prefactor of bottom component for drain-bulk junction	–	100
CTATGAT	Trap-assisted tunneling prefactor of gate-edge component for source-bulk junction	–	0.0001
CTATGATD	Trap-assisted tunneling prefactor of gate-edge component for drain-bulk junction	–	0.0001
CTATSTI	Trap-assisted tunneling prefactor of STI-edge component for source-bulk junction	–	0.0001
CTATSTID	Trap-assisted tunneling prefactor of STI-edge component for drain-bulk junction	–	0.0001
CTL	Length dependence of interface states factor	–	0
CTLEXP	Exponent for length dependence of interface states factor	–	1
CTLW	Area dependence of interface states factor	–	0

Table 2.90: PSP102VA legacy MOSFET 102.5 Device Model Parameters

Parameter	Description	Units	Default
CTO	Geometry-independent interface states factor	–	0
CTW	Width dependence of interface states factor	–	0
DLQ	Effective channel length reduction for CV	–	0
DLSIL	Silicide extension over the physical gate length	–	0
DNSUBO	Effective doping bias-dependence parameter	–	0
DPHIBL	Length dependence offset of PHIB	–	0
DPHIBLEXP	Exponent for length dependence of offset of PHIB	–	1
DPHIBLW	Area dependence of offset of PHIB	–	0
DPHIBO	Geometry independent offset of PHIB	–	0
DPHIBW	Width dependence of offset of PHIB	–	0
DTA	Temperature offset w.r.t. ambient circuit temperature	–	0
DWQ	Effective channel width reduction for CV	–	0
EFO	Flicker noise frequency exponent	–	1
EPSROXO	Relative permittivity of gate dielectric	–	3.9
FBBTRBOT	Normalization field at the reference temperature for band-to-band tunneling of bottom component for source-bulk junction	–	1e+09
FBBTRBOTD	Normalization field at the reference temperature for band-to-band tunneling of bottom component for drain-bulk junction	–	1e+09
FBBTRGAT	Normalization field at the reference temperature for band-to-band tunneling of gate-edge component for source-bulk junction	–	1e+09
FBBTRGATD	Normalization field at the reference temperature for band-to-band tunneling of gate-edge component for drain-bulk junction	–	1e+09
FBBTRSTI	Normalization field at the reference temperature for band-to-band tunneling of STI-edge component for source-bulk junction	–	1e+09
FBBTRSTID	Normalization field at the reference temperature for band-to-band tunneling of STI-edge component for drain-bulk junction	–	1e+09
FBET1	Relative mobility decrease due to first lateral profile	–	0
FBET1W	Width dependence of relative mobility decrease due to first lateral profile	–	0

Table 2.90: PSP102VA legacy MOSFET 102.5 Device Model Parameters

Parameter	Description	Units	Default
FBET2	Relative mobility decrease due to second lateral profile	–	0
FETA0	Effective field parameter	–	1
FJUNQ	Fraction below which source-bulk junction capacitance components are considered negligible	–	0.03
FJUNQD	Fraction below which drain-bulk junction capacitance components are considered negligible	–	0.03
FNTEXCL	Length dependence coefficient of excess noise	–	0
FNT0	Thermal noise coefficient	–	1
FOL1	First length dependence coefficient for short channel body effect	–	0
FOL2	Second length dependence coefficient for short channel body effect	–	0
GC20	Gate current slope factor	–	0.375
GC30	Gate current curvature factor	–	0.063
GCO0	Gate tunnelling energy adjustment	–	0
IDSATRBOT	Saturation current density at the reference temperature of bottom component for source-bulk junction	–	1e-12
IDSATRBOTD	Saturation current density at the reference temperature of bottom component for drain-bulk junction	–	1e-12
IDSATRGAT	Saturation current density at the reference temperature of gate-edge component for source-bulk junction	–	1e-18
IDSATRGATD	Saturation current density at the reference temperature of gate-edge component for drain-bulk junction	–	1e-18
IDSATRSTI	Saturation current density at the reference temperature of STI-edge component for source-bulk junction	–	1e-18
IDSATRSTID	Saturation current density at the reference temperature of STI-edge component for drain-bulk junction	–	1e-18
IGINVLW	Gate channel current pre-factor for 1 um**2 channel area	–	0
IGOVDW	Gate overlap current pre-factor for 1 um wide channel for drain side	–	0

Table 2.90: PSP102VA legacy MOSFET 102.5 Device Model Parameters

Parameter	Description	Units	Default
IGOVW	Gate overlap current pre-factor for 1 um wide channel	–	0
IMAX	Maximum current up to which forward current behaves exponentially	–	1000
KUO	Mobility degradation/enhancement coefficient	–	0
KUOWEL	Length dependent mobility degradation factor	–	0
KUOWELW	Area dependent mobility degradation factor	–	0
KUOWEO	Geometrical independent mobility degradation factor	–	0
KUOWEW	Width dependent mobility degradation factor	–	0
KVSAT	Saturation velocity degradation/enhancement coefficient	–	0
KVTHO	Threshold shift parameter	–	0
KVTHOWEL	Length dependent threshold shift parameter	–	0
KVTHOWELW	Area dependent threshold shift parameter	–	0
KVTHOWEO	Geometrical independent threshold shift parameter	–	0
KVTHOWEW	Width dependent threshold shift parameter	–	0
LAP	Effective channel length reduction per side	–	0
LEVEL	Model level	–	1020
LINTNOI	Length offset for flicker noise	–	0
LKUO	Length dependence of KUO	–	0
LKVTHO	Length dependence of KVTHO	–	0
LLODKUO	Length parameter for UO stress effect	–	0
LLODVTH	Length parameter for VTH-stress effect	–	0
LODETAO	eta0 shift modification factor for stress effect	–	1
LOV	Overlap length for gate/drain and gate/source overlap capacitance	–	0
LOVD	Overlap length for gate/drain overlap capacitance	–	0
LP1	Mobility-related characteristic length of first lateral profile	–	1e-08
LP1W	Width dependence of mobility-related characteristic length of first lateral profile	–	0
LP2	Mobility-related characteristic length of second lateral profile	–	1e-08
LPCK	Char. length of lateral doping profile	–	1e-08

Table 2.90: PSP102VA legacy MOSFET 102.5 Device Model Parameters

Parameter	Description	Units	Default
LPCKW	Width dependence of char. length of lateral doping profile	–	0
LVARL	Length dependence of LVAR	–	0
LVARO	Geom. independent difference between actual and programmed gate length	–	0
LVARW	Width dependence of LVAR	–	0
MEFFTATBOT	Effective mass (in units of m0) for trap-assisted tunneling of bottom component for source-bulk junction	–	0.25
MEFFTATBOTD	Effective mass (in units of m0) for trap-assisted tunneling of bottom component for drain-bulk junction	–	0.25
MEFFTATGAT	Effective mass (in units of m0) for trap-assisted tunneling of gate-edge component for source-bulk junction	–	0.25
MEFFTATGATD	Effective mass (in units of m0) for trap-assisted tunneling of gate-edge component for drain-bulk junction	–	0.25
MEFFTATSTI	Effective mass (in units of m0) for trap-assisted tunneling of STI-edge component for source-bulk junction	–	0.25
MEFFTATSTID	Effective mass (in units of m0) for trap-assisted tunneling of STI-edge component for drain-bulk junction	–	0.25
MUEO	Geometry independent mobility reduction coefficient at TR	–	0.5
MUEW	Width dependence of mobility reduction coefficient at TR	–	0
NFALW	First coefficient of flicker noise for 1 um**2 channel area	–	8e+22
NFBLW	Second coefficient of flicker noise for 1 um**2 channel area	–	3e+07
NFCLW	Third coefficient of flicker noise for 1 um**2 channel area	–	0
NOVDO	Effective doping of overlap region for drain side	–	5e+25
NOVO	Effective doping of overlap region	–	5e+25
NPCK	Pocket doping level	–	1e+24
NPCKW	Width dependence of pocket doping NPCK due to segregation	–	0
NPL	Length dependence of gate poly-silicon doping	–	0

Table 2.90: PSP102VA legacy MOSFET 102.5 Device Model Parameters

Parameter	Description	Units	Default
NPO	Geometry-independent gate poly-silicon doping	–	1e+26
NSLPO	Effective doping bias-dependence parameter	–	0.05
NSUBO	Geometry independent substrate doping	–	3e+23
NSUBW	Width dependence of background doping NSUBO due to segregation	–	0
PBOT	Grading coefficient of bottom component for source-bulk junction	–	0.5
PBOTD	Grading coefficient of bottom component for drain-bulk junction	–	0.5
PBRBOT	Breakdown onset tuning parameter of bottom component for source-bulk junction	–	4
PBRBOTD	Breakdown onset tuning parameter of bottom component for drain-bulk junction	–	4
PBRGAT	Breakdown onset tuning parameter of gate-edge component for source-bulk junction	–	4
PBRGATD	Breakdown onset tuning parameter of gate-edge component for drain-bulk junction	–	4
PBRSTI	Breakdown onset tuning parameter of STI-edge component for source-bulk junction	–	4
PBRSTID	Breakdown onset tuning parameter of STI-edge component for drain-bulk junction	–	4
PGAT	Grading coefficient of gate-edge component for source-bulk junction	–	0.5
PGATD	Grading coefficient of gate-edge component for drain-bulk junction	–	0.5
PHIGBOT	Zero-temperature bandgap voltage of bottom component for source-bulk junction	–	1.16
PHIGBOTD	Zero-temperature bandgap voltage of bottom component for drain-bulk junction	–	1.16
PHIGGAT	Zero-temperature bandgap voltage of gate-edge component for source-bulk junction	–	1.16
PHIGGATD	Zero-temperature bandgap voltage of gate-edge component for drain-bulk junction	–	1.16
PHIGSTI	Zero-temperature bandgap voltage of STI-edge component for source-bulk junction	–	1.16
PHIGSTID	Zero-temperature bandgap voltage of STI-edge component for drain-bulk junction	–	1.16
PKUO	Cross-term dependence of KUO	–	0
PKVTHO	Cross-term dependence of KVTHO	–	0

Table 2.90: PSP102VA legacy MOSFET 102.5 Device Model Parameters

Parameter	Description	Units	Default
PSTI	Grading coefficient of STI-edge component for source-bulk junction	–	0.5
PSTID	Grading coefficient of STI-edge component for drain-bulk junction	–	0.5
QMC	Quantum-mechanical correction factor	–	1
RBULK0	Bulk resistance between node BP and BI	–	0
RG0	Gate resistance	–	0
RINT	Contact resistance between silicide and ploy	–	0
RJUND0	Drain-side bulk resistance between node BI and BD	–	0
RJUNS0	Source-side bulk resistance between node BI and BS	–	0
RSB0	Back-bias dependence of series resistance	–	0
RSG0	Gate-bias dependence of series resistance	–	0
RSHG	Gate electrode diffusion sheet resistance	–	0
RSW1	Source/drain series resistance for 1 um wide channel at TR	–	2500
RSW2	Higher-order width scaling of RS	–	0
RVPOLY	Vertical poly resistance	–	0
RWELL0	Well resistance between node BI and B	–	0
SAREF	Reference distance between OD-edge and poly from one side	–	1e-06
SBREF	Reference distance between OD-edge and poly from other side	–	1e-06
SCREF	Distance between OD-edge and well edge of a reference device	–	1e-06
STA20	Temperature dependence of A2	–	0
STBETL	Length dependence of temperature dependence of BETN	–	0
STBETLW	Area dependence of temperature dependence of BETN	–	0
STBET0	Geometry independent temperature dependence of BETN	–	1
STBETW	Width dependence of temperature dependence of BETN	–	0
STBGIDLD0	Temperature dependence of BGIDL for drain side	–	0
STBGIDL0	Temperature dependence of BGIDL	–	0
STCS0	Temperature dependence of CS	–	0

Table 2.90: PSP102VA legacy MOSFET 102.5 Device Model Parameters

Parameter	Description	Units	Default
STETAO	eta0 shift factor related to VTHO change	–	0
STFBBTBOT	Temperature scaling parameter for band-to-band tunneling of bottom component for source-bulk junction	–	-0.001
STFBBTBOTD	Temperature scaling parameter for band-to-band tunneling of bottom component for drain-bulk junction	–	-0.001
STFBBTGAT	Temperature scaling parameter for band-to-band tunneling of gate-edge component for source-bulk junction	–	-0.001
STFBBTGATD	Temperature scaling parameter for band-to-band tunneling of gate-edge component for drain-bulk junction	–	-0.001
STFBBTSTI	Temperature scaling parameter for band-to-band tunneling of STI-edge component for source-bulk junction	–	-0.001
STFBBTSTID	Temperature scaling parameter for band-to-band tunneling of STI-edge component for drain-bulk junction	–	-0.001
STIGO	Temperature dependence of IGINV and IGOV	–	2
STMUEO	Temperature dependence of MUE	–	0
STRSO	Temperature dependence of RS	–	1
STTHEMUO	Temperature dependence of THEMU	–	1.5
STTHESATL	Length dependence of temperature dependence of THESAT	–	0
STTHESATLW	Area dependence of temperature dependence of THESAT	–	0
STTHESATO	Geometry independent temperature dependence of THESAT	–	1
STTHESATW	Width dependence of temperature dependence of THESAT	–	0
STVFBL	Length dependence of temperature dependence of VFB	–	0
STVFBLW	Area dependence of temperature dependence of VFB	–	0
STVFBO	Geometry-independent temperature dependence of VFB	–	0.0005
STVFBW	Width dependence of temperature dependence of VFB	–	0
STXCORO	Temperature dependence of XCOR	–	0

Table 2.90: PSP102VA legacy MOSFET 102.5 Device Model Parameters

Parameter	Description	Units	Default
SWGIDL	Flag for GIDL current, 0=turn off IGIDL	–	0
SWIGATE	Flag for gate current, 0=turn off IG	–	0
SWIMPACT	Flag for impact ionization current, 0=turn off II	–	0
SWJUNASYM	Flag for asymmetric junctions; 0=symmetric, 1=asymmetric	–	0
SWJUNCAP	Flag for juncap, 0=turn off juncap	–	0
SWJUNEXP	Flag for JUNCAP-express; 0=full model, 1=express model	–	0
THEMUO	Mobility reduction exponent at TR	–	1.5
THESATBO	Back-bias dependence of velocity saturation	–	0
THESATGO	Gate-bias dependence of velocity saturation	–	0
THESATL	Length dependence of THESAT	–	0.05
THESATLEXP	Exponent for length dependence of THESAT	–	1
THESATLW	Area dependence of velocity saturation parameter	–	0
THESATO	Geometry independent velocity saturation parameter at TR	–	0
THESATW	Width dependence of velocity saturation parameter	–	0
TKUO	Temperature dependence of KUO	–	0
TOXO	Gate oxide thickness	–	2e-09
TOXOVDO	Overlap oxide thickness for drain side	–	2e-09
TOXOVO	Overlap oxide thickness	–	2e-09
TR	nominal (reference) temperature	–	21
TRJ	reference temperature	–	21
TYPE	Channel type parameter, +1=NMOS -1=PMOS	–	1
UO	Zero-field mobility at TR	–	0.05
VBIRBOT	Built-in voltage at the reference temperature of bottom component for source-bulk junction	–	1
VBIRBOTD	Built-in voltage at the reference temperature of bottom component for drain-bulk junction	–	1
VBIRGAT	Built-in voltage at the reference temperature of gate-edge component for source-bulk junction	–	1
VBIRGATD	Built-in voltage at the reference temperature of gate-edge component for drain-bulk junction	–	1
VBIRSTI	Built-in voltage at the reference temperature of STI-edge component for source-bulk junction	–	1

Table 2.90: PSP102VA legacy MOSFET 102.5 Device Model Parameters

Parameter	Description	Units	Default
VBIRSTID	Built-in voltage at the reference temperature of STI-edge component for drain-bulk junction	–	1
VBRBOT	Breakdown voltage of bottom component for source-bulk junction	–	10
VBRBOTD	Breakdown voltage of bottom component for drain-bulk junction	–	10
VBRGAT	Breakdown voltage of gate-edge component for source-bulk junction	–	10
VBRGATD	Breakdown voltage of gate-edge component for drain-bulk junction	–	10
VBRSTI	Breakdown voltage of STI-edge component for source-bulk junction	–	10
VBRSTID	Breakdown voltage of STI-edge component for drain-bulk junction	–	10
VFBL	Length dependence of flat-band voltage	–	0
VFBLW	Area dependence of flat-band voltage	–	0
VFBO	Geometry-independent flat-band voltage at TR	–	-1
VFBW	Width dependence of flat-band voltage	–	0
VJUNREF	Typical maximum source-bulk junction voltage; usually about 2*VSUP	–	2.5
VJUNREFD	Typical maximum drain-bulk junction voltage; usually about 2*VSUP	–	2.5
VNSUBO	Effective doping bias-dependence parameter	–	0
VPO	CLM logarithmic dependence parameter	–	0.05
WBET	Characteristic width for width scaling of BETN	–	1e-09
WEB	Coefficient for SCB	–	0
WEC	Coefficient for SCC	–	0
WKUO	Width dependence of KUO	–	0
WKVTHO	Width dependence of KVTHO	–	0
WLOD	Width parameter	–	0
WLODKUO	Width parameter for UO stress effect	–	0
WLODVTH	Width parameter for VTH-stress effect	–	0
WOT	Effective channel width reduction per side	–	0
WSEG	Char. length of segregation of background doping NSUBO	–	1e-08
WSEGP	Char. length of segregation of pocket doping NPCK	–	1e-08
WVARL	Length dependence of WVAR	–	0

Table 2.90: PSP102VA legacy MOSFET 102.5 Device Model Parameters

Parameter	Description	Units	Default
WVARO	Geom. independent difference between actual and programmed field-oxide opening	–	0
WVARW	Width dependence of WVAR	–	0
XCORL	Length dependence of non-universality parameter	–	0
XCORLW	Area dependence of non-universality parameter	–	0
XCORO	Geometry independent non-universality parameter	–	0
XCORW	Width dependence of non-universality parameter	–	0
XJUNGAT	Junction depth of gate-edge component for source-bulk junction	–	1e-07
XJUNGATD	Junction depth of gate-edge component for drain-bulk junction	–	1e-07
XJUNSTI	Junction depth of STI-edge component for source-bulk junction	–	1e-07
XJUNSTID	Junction depth of STI-edge component for drain-bulk junction	–	1e-07

Level 103 MOSFET Tables (PSP version 103.4)

Xyce includes the PSP MOSFET model, version 103.4 [25]. Full documentation for the PSP model is available on its web site, `http://www.cea.fr/cea-tech/leti/pspsupport`. Instance and model parameters for the PSP model are given in tables 2.91 and 2.92.

Table 2.91: PSP103VA MOSFET Device Instance Parameters

Parameter	Description	Units	Default
ABDRAIN	Bottom area of drain junction	m^2	1e-12
ABSOURCE	Bottom area of source junction	m^2	1e-12
AD	Bottom area of drain junction	m^2	1e-12
AS	Bottom area of source junction	m^2	1e-12
DELVTO	Threshold voltage shift parameter	V	0
DELVTOEDGE	Threshold voltage shift parameter of edge transistor	V	0
FACTUO	Zero-field mobility pre-factor	—	1
FACTUOEDGE	Zero-field mobility pre-factor of edge transistor	—	1
JW	Gate-edge length of source/drain junction	m	1e-06
L	Design length	m	1e-05

Table 2.91: PSP103VA MOSFET Device Instance Parameters

Parameter	Description	Units	Default
LGDRAIN	Gate-edge length of drain junction	m	1e-06
LGSOURCE	Gate-edge length of source junction	m	1e-06
LSDRAIN	STI-edge length of drain junction	m	1e-06
LSSOURCE	STI-edge length of source junction	m	1e-06
M	Alias for MULT	—	1
MULT	Number of devices in parallel	—	1
NF	Number of fingers	—	1
NGCON	Number of gate contacts	—	1
NRD	Number of squares of drain diffusion	—	0
NRS	Number of squares of source diffusion	—	0
PD	Perimeter of drain junction	m	1e-06
PS	Perimeter of source junction	m	1e-06
SA	Distance between OD-edge and poly from one side	m	0
SB	Distance between OD-edge and poly from other side	m	0
SC	Distance between OD-edge and nearest well edge	m	0
SCA	Integral of the first distribution function for scattered well dopants	—	0
SCB	Integral of the second distribution function for scattered well dopants	—	0
SCC	Integral of the third distribution function for scattered well dopants	—	0
SD	Distance between neighbouring fingers	m	0
W	Design width	m	1e-05
XGW	Distance from the gate contact to the channel edge	m	1e-07

Table 2.92: PSP103VA MOSFET Device Model Parameters

Parameter	Description	Units	Default
A1	Impact-ionization pre-factor	—	1
A1L	Length dependence of A1	—	0
A1O	Geometry independent impact-ionization pre-factor	—	1
A1W	Width dependence of A1	—	0

Table 2.92: PSP103VA MOSFET Device Model Parameters

Parameter	Description	Units	Default
A2	Impact-ionization exponent at TR	V	10
A20	Impact-ionization exponent at TR	V	10
A3	Saturation-voltage dependence of impact-ionization	—	1
A3L	Length dependence of A3	—	0
A30	Geometry independent saturation-voltage dependence of II	—	1
A3W	Width dependence of A3	—	0
A4	Back-bias dependence of impact-ionization	$V^{-1/2}$	0
A4L	Length dependence of A4	—	0
A40	Geometry independent back-bias dependence of II	$V^{-1/2}$	0
A4W	Width dependence of A4	—	0
AGIDL	GIDL pre-factor	A/V^3	0
AGIDLD	GIDL pre-factor for drain side	A/V^3	0
AGIDLDW	Width dependence of GIDL pre-factor for drain side	A/V^3	0
AGIDLW	Width dependence of GIDL pre-factor	A/V^3	0
ALP	CLM pre-factor	—	0.01
ALP1	CLM enhancement factor above threshold	V	0
ALP1L1	Length dependence of CLM enhancement factor above threshold	V	0
ALP1L2	Second_order length dependence of ALP1	—	0
ALP1LEXP	Exponent for length dependence of ALP1	—	0.5
ALP1W	Width dependence of ALP1	—	0
ALP2	CLM enhancement factor below threshold	V^{-1}	0
ALP2L1	Length dependence of CLM enhancement factor below threshold	V^{-1}	0
ALP2L2	Second_order length dependence of ALP2	—	0
ALP2LEXP	Exponent for length dependence of ALP2	—	0.5
ALP2W	Width dependence of ALP2	—	0
ALPL	Length dependence of ALP	—	0.0005
ALPLEXP	Exponent for length dependence of ALP	—	1
ALPNOI	Exponent for length offset for flicker noise	—	2
ALPW	Width dependence of ALP	—	0
AX	Linear/saturation transition factor	—	3
AXL	Length dependence of AX	—	0.4

Table 2.92: PSP103VA MOSFET Device Model Parameters

Parameter	Description	Units	Default
AXO	Geometry independent linear/saturation transition factor	—	18
BETEDGEW	Width scaling coefficient of edge transistor mobility	—	0
BETN	Channel aspect ratio times zero-field mobility	$m^2/(Vs)$	0.07
BETNEDGE	Channel aspect ratio times zero-field mobility of edge transistor	$m^2/(Vs)$	0.0005
BETW1	First higher-order width scaling coefficient of BETN	—	0
BETW2	Second higher-order width scaling coefficient of BETN	—	0
BGIDL	GIDL probability factor at TR	V	41
BGIDLD	GIDL probability factor at TR for drain side	V	41
BGIDLDO	GIDL probability factor at TR for drain side	V	41
BGIDLO	GIDL probability factor at TR	V	41
CBBTBOT	Band-to-band tunneling prefactor of bottom component for source-bulk junction	A/V^3	1e-12
CBBTBOTD	Band-to-band tunneling prefactor of bottom component for drain-bulk junction	A/V^3	1e-12
CBBTGAT	Band-to-band tunneling prefactor of gate-edge component for source-bulk junction	Am/V^3	1e-18
CBBTGATD	Band-to-band tunneling prefactor of gate-edge component for drain-bulk junction	Am/V^3	1e-18
CBBTSTI	Band-to-band tunneling prefactor of STI-edge component for source-bulk junction	Am/V^3	1e-18
CBBTSTID	Band-to-band tunneling prefactor of STI-edge component for drain-bulk junction	Am/V^3	1e-18
CF	DIBL-parameter	—	0
CFB	Back bias dependence of CF	V^{-1}	0
CFBEDGE	Bulk voltage dependence parameter of DIBL-parameter of edge transistors	V^{-1}	0
CFBEDGEO	Bulk voltage dependence parameter of DIBL-parameter of edge transistors	V^{-1}	0
CFBO	Back-bias dependence of CF	V^{-1}	0
CFD	Drain voltage dependence of CF	V^{-1}	0
CFDEDGE	Drain voltage dependence parameter of DIBL-parameter of edge transistors	V^{-1}	0
CFDEDGEO	Drain voltage dependence parameter of DIBL-parameter of edge transistors	V^{-1}	0
CFDO	Drain voltage dependence of CF	V^{-1}	0

Table 2.92: PSP103VA MOSFET Device Model Parameters

Parameter	Description	Units	Default
CFEDGE	DIBL parameter of edge transistors	—	0
CFEDGEL	Length dependence of DIBL-parameter of edge transistors	—	0
CFEDGELEXP	Exponent for length dependence of DIBL-parameter of edge transistors	—	2
CFEDGEW	Width dependence of DIBL-parameter of edge transistors	—	0
CFL	Length dependence of DIBL-parameter	—	0
CFLEXP	Exponent for length dependence of CF	—	2
CFR	Outer fringe capacitance	F	0
CFRD	Outer fringe capacitance for drain side	F	0
CFRDW	Outer fringe capacitance for 1 um wide channel for drain side	F	0
CFRW	Outer fringe capacitance for 1 um wide channel	F	0
CFW	Width dependence of CF	—	0
CGBOV	Oxide capacitance for gate-bulk overlap	F	0
CGBOVL	Oxide capacitance for gate-bulk overlap for 1 um long channel	F	0
CGIDL	Back-bias dependence of GIDL	—	0
CGIDLD	Back-bias dependence of GIDL for drain side	—	0
CGIDLDO	Back-bias dependence of GIDL for drain side	—	0
CGIDLO	Back-bias dependence of GIDL	—	0
CGOV	Oxide capacitance for gate-drain/source overlap	F	1e-15
CGOVD	Oxide capacitance for gate-drain overlap	F	1e-15
CHIB	Tunnelling barrier height	V	3.1
CHIBO	Tunnelling barrier height	V	3.1
CJORBOT	Zero-bias capacitance per unit-of-area of bottom component for source-bulk junction	F/m^2	0.001
CJORBOTD	Zero-bias capacitance per unit-of-area of bottom component for drain-bulk junction	F/m^2	0.001
CJORGAT	Zero-bias capacitance per unit-of-length of gate-edge component for source-bulk junction	F/m	1e-09
CJORGATD	Zero-bias capacitance per unit-of-length of gate-edge component for drain-bulk junction	F/m	1e-09
CJORSTI	Zero-bias capacitance per unit-of-length of STI-edge component for source-bulk junction	F/m	1e-09
CJORSTID	Zero-bias capacitance per unit-of-length of STI-edge component for drain-bulk junction	F/m	1e-09

Table 2.92: PSP103VA MOSFET Device Model Parameters

Parameter	Description	Units	Default
COX	Oxide capacitance for intrinsic channel	F	1e-14
CS	Coulomb scattering parameter at TR	—	0
CSL	Length dependence of CS	—	0
CSLEXP	Exponent for length dependence of CS	—	1
CSLW	Area dependence of CS	—	0
CSO	Geometry independent coulomb scattering parameter at TR	—	0
CSRHBOT	Shockley-Read-Hall prefactor of bottom component for source-bulk junction	A/m^3	100
CSRHBOTD	Shockley-Read-Hall prefactor of bottom component for drain-bulk junction	A/m^3	100
CSRHGAT	Shockley-Read-Hall prefactor of gate-edge component for source-bulk junction	A/m^2	0.0001
CSRHGATD	Shockley-Read-Hall prefactor of gate-edge component for drain-bulk junction	A/m^2	0.0001
CSRHSTI	Shockley-Read-Hall prefactor of STI-edge component for source-bulk junction	A/m^2	0.0001
CSRHSTID	Shockley-Read-Hall prefactor of STI-edge component for drain-bulk junction	A/m^2	0.0001
CSW	Width dependence of CS	—	0
CT	Interface states factor	—	0
CTATBOT	Trap-assisted tunneling prefactor of bottom component for source-bulk junction	A/m^3	100
CTATBOTD	Trap-assisted tunneling prefactor of bottom component for drain-bulk junction	A/m^3	100
CTATGAT	Trap-assisted tunneling prefactor of gate-edge component for source-bulk junction	A/m^2	0.0001
CTATGATD	Trap-assisted tunneling prefactor of gate-edge component for drain-bulk junction	A/m^2	0.0001
CTATSTI	Trap-assisted tunneling prefactor of STI-edge component for source-bulk junction	A/m^2	0.0001
CTATSTID	Trap-assisted tunneling prefactor of STI-edge component for drain-bulk junction	A/m^2	0.0001
CTEDGE	Interface states factor of edge transistors	—	0
CTEDGEL	Length dependence of interface states factor of edge transistors	—	0
CTEDGELEXP	Exponent for length dependence of interface states factor of edge transistors	—	1
CTEDGEO	Geometry-independent interface states factor of edge transistors	—	0

Table 2.92: PSP103VA MOSFET Device Model Parameters

Parameter	Description	Units	Default
CTL	Length dependence of interface states factor	—	0
CTLEXP	Exponent for length dependence of interface states factor	—	1
CTLW	Area dependence of interface states factor	—	0
CTO	Geometry-independent interface states factor	—	0
CTW	Width dependence of interface states factor	—	0
DELVTAC	Offset parameter for PHIB in separate charge calculation	V	0
DELVTACL	Length dependence of DELVTAC	V	0
DELVTACLEXP	Exponent for length dependence of offset of DELVTAC	—	1
DELVTACLW	Area dependence of DELVTAC	V	0
DELVTACO	Geom. independent offset parameter for PHIB in separate charge calculation	V	0
DELVTACW	Width dependence of DELVTAC	V	0
DLQ	Effective channel length reduction for CV	m	0
DLSIL	Silicide extension over the physical gate length	m	0
DNSUB	Effective doping bias-dependence parameter	V^{-1}	0
DNSUBO	Effective doping bias-dependence parameter	V^{-1}	0
DPHIB	Offset parameter for PHIB	V	0
DPHIBEDGE	Offset parameter for PHIB of edge transistors	V	0
DPHIBEDGEL	Length dependence of edge transistor PHIB offset	V	0
DPHIBEDGELEXP	Exponent for length dependence of edge transistor PHIB offset	—	1
DPHIBEDGELW	Area dependence of edge transistor PHIB offset	V	0
DPHIBEDGEO	Geometry independent of edge transistor PHIB offset	V	0
DPHIBEDGEW	Width dependence of edge transistor PHIB offset	V	0
DPHIBL	Length dependence offset of PHIB	V	0
DPHIBLEXP	Exponent for length dependence of offset of PHIB	—	1
DPHIBLW	Area dependence of offset of PHIB	V	0
DPHIBO	Geometry independent offset of PHIB	V	0
DPHIBW	Width dependence of offset of PHIB	V	0
DTA	Temperature offset w.r.t. ambient temperature	K	0
DVSBNUD	Vsb-range for NUD-effect	V	1

Table 2.92: PSP103VA MOSFET Device Model Parameters

Parameter	Description	Units	Default
DVSBNUDO	Vsb range for NUD-effect	V	1
DWQ	Effective channel width reduction for CV	m	0
EF	Flicker noise frequency exponent	—	1
EFEDGE	Flicker noise frequency exponent of edge transistors	—	1
EFEDGEO	Flicker noise frequency exponent	—	1
EFO	Flicker noise frequency exponent	—	1
EPSROX	Relative permittivity of gate dielectric	—	3.9
EPSROXO	Relative permittivity of gate dielectric	—	3.9
FACNEFFAC	Pre-factor for effective substrate doping in separate charge calculation	—	1
FACNEFFACL	Length dependence of FACNEFFAC	—	0
FACNEFFACLW	Area dependence of FACNEFFAC	—	0
FACNEFFACO	Geom. independent pre-factor for effective substrate doping in separate charge calculation	—	1
FACNEFFACW	Width dependence of FACNEFFAC	—	0
FBBTRBOT	Normalization field at the reference temperature for band-to-band tunneling of bottom component for source-bulk junction	Vm^{-1}	1e+09
FBBTRBOTD	Normalization field at the reference temperature for band-to-band tunneling of bottom component for drain-bulk junction	Vm^{-1}	1e+09
FBBTRGAT	Normalization field at the reference temperature for band-to-band tunneling of gate-edge component for source-bulk junction	Vm^{-1}	1e+09
FBBTRGATD	Normalization field at the reference temperature for band-to-band tunneling of gate-edge component for drain-bulk junction	Vm^{-1}	1e+09
FBBTRSTI	Normalization field at the reference temperature for band-to-band tunneling of STI-edge component for source-bulk junction	Vm^{-1}	1e+09
FBBTRSTID	Normalization field at the reference temperature for band-to-band tunneling of STI-edge component for drain-bulk junction	Vm^{-1}	1e+09
FBET1	Relative mobility decrease due to first lateral profile	—	0
FBET1W	Width dependence of relative mobility decrease due to first lateral profile	—	0
FBET2	Relative mobility decrease due to second lateral profile	—	0
FBETEDGE	Length dependence of edge transistor mobility	—	0

Table 2.92: PSP103VA MOSFET Device Model Parameters

Parameter	Description	Units	Default
FETA	Effective field parameter	—	1
FETAO	Effective field parameter	—	1
FJUNQ	Fraction below which source-bulk junction capacitance components are considered negligible	—	0.03
FJUNQD	Fraction below which drain-bulk junction capacitance components are considered negligible	—	0.03
FNT	Thermal noise coefficient	—	1
FNTEDGE	Thermal noise coefficient of edge transistors	—	1
FNTEDGEO	Thermal noise coefficient	—	1
FNTEXC	Excess noise coefficient	—	0
FNTEXCL	Length dependence coefficient of excess noise	—	0
FNTO	Thermal noise coefficient	—	1
FOL1	First length dependence coefficient for short channel body effect	—	0
FOL2	Second length dependence coefficient for short channel body effect	—	0
FREV	Coefficient for reverse breakdown current limitation	—	1000
GC2	Gate current slope factor	—	0.375
GC2O	Gate current slope factor	—	0.375
GC3	Gate current curvature factor	—	0.063
GC3O	Gate current curvature factor	—	0.063
GCO	Gate tunnelling energy adjustment	—	0
GCOO	Gate tunnelling energy adjustment	—	0
GFACNUD	Body-factor change due to NUD-effect	—	1
GFACNUDL	Length dependence of GFACNUD	—	0
GFACNUDLEXP	Exponent for length dependence of GFACNUD	—	1
GFACNUDLW	Area dependence of GFACNUD	—	0
GFACNUDO	Geom. independent body-factor change due to NUD-effect	—	1
GFACNUDW	Width dependence of GFACNUD	—	0
IDSATRBOT	Saturation current density at the reference temperature of bottom component for source-bulk junction	A/m^2	1e-12
IDSATRBOTD	Saturation current density at the reference temperature of bottom component for drain-bulk junction	A/m^2	1e-12

Table 2.92: PSP103VA MOSFET Device Model Parameters

Parameter	Description	Units	Default
IDSATRGAT	Saturation current density at the reference temperature of gate-edge component for source-bulk junction	A/m	1e-18
IDSATRGATD	Saturation current density at the reference temperature of gate-edge component for drain-bulk junction	A/m	1e-18
IDSATRSTI	Saturation current density at the reference temperature of STI-edge component for source-bulk junction	A/m	1e-18
IDSATRSTID	Saturation current density at the reference temperature of STI-edge component for drain-bulk junction	A/m	1e-18
IGINV	Gate channel current pre-factor	A	0
IGINVLW	Gate channel current pre-factor for 1 um**2 channel area	A	0
IGOV	Gate overlap current pre-factor	A	0
IGOVD	Gate overlap current pre-factor for drain side	A	0
IGOVDW	Gate overlap current pre-factor for 1 um wide channel for drain side	A	0
IGOVW	Gate overlap current pre-factor for 1 um wide channel	A	0
IMAX	Maximum current up to which forward current behaves exponentially	A	1000
KUO	Mobility degradation/enhancement coefficient	m	0
KUOWEL	Length dependent mobility degradation factor	—	0
KUOWELW	Area dependent mobility degradation factor	—	0
KUOWEO	Geometrical independent mobility degradation factor	—	0
KUOWEW	Width dependent mobility degradation factor	—	0
KVSAT	Saturation velocity degradation/enhancement coefficient	m	0
KVTHO	Threshold shift parameter	Vm	0
KVTHOWEL	Length dependent threshold shift parameter	—	0
KVTHOWELW	Area dependent threshold shift parameter	—	0
KVTHOWEO	Geometrical independent threshold shift parameter	—	0
KVTHOWEW	Width dependent threshold shift parameter	—	0
LAP	Effective channel length reduction per side	m	0
LEVEL	Model level	—	103
LINTNOI	Length offset for flicker noise	m	0

Table 2.92: PSP103VA MOSFET Device Model Parameters

Parameter	Description	Units	Default
LKUO	Length dependence of KUO	—	0
LKVTHO	Length dependence of KVTHO	—	0
LLODKUO	Length parameter for UO stress effect	—	0
LLODVTH	Length parameter for VTH-stress effect	—	0
LMAX	Dummy parameter to label binning set	m	1
LMIN	Dummy parameter to label binning set	m	0
LODETAO	Eta0 shift modification factor for stress effect	—	1
LOV	Overlap length for gate/drain and gate/source overlap capacitance	m	0
LOVD	Overlap length for gate/drain overlap capacitance	m	0
LP1	Mobility-related characteristic length of first lateral profile	m	1e-08
LP1W	Width dependence of mobility-related characteristic length of first lateral profile	—	0
LP2	Mobility-related characteristic length of second lateral profile	m	1e-08
LPCK	Char. length of lateral doping profile	m	1e-08
LPCKW	Width dependence of char. length of lateral doping profile	—	0
LPEDGE	Exponent for length dependence of edge transistor mobility	m	1e-08
LVARL	Length dependence of LVAR	—	0
LVARO	Geom. independent difference between actual and programmed gate length	m	0
LVARW	Width dependence of LVAR	—	0
MEFFTATBOT	Effective mass (in units of m0) for trap-assisted tunneling of bottom component for source-bulk junction	—	0.25
MEFFTATBOTD	Effective mass (in units of m0) for trap-assisted tunneling of bottom component for drain-bulk junction	—	0.25
MEFFTATGAT	Effective mass (in units of m0) for trap-assisted tunneling of gate-edge component for source-bulk junction	—	0.25
MEFFTATGATD	Effective mass (in units of m0) for trap-assisted tunneling of gate-edge component for drain-bulk junction	—	0.25
MEFFTATSTI	Effective mass (in units of m0) for trap-assisted tunneling of STI-edge component for source-bulk junction	—	0.25

Table 2.92: PSP103VA MOSFET Device Model Parameters

Parameter	Description	Units	Default
MEFFTATSTID	Effective mass (in units of m0) for trap-assisted tunneling of STI-edge component for drain-bulk junction	—	0.25
MUE	Mobility reduction coefficient at TR	m/V	0.5
MUEO	Geometry independent mobility reduction coefficient at TR	m/V	0.5
MUEW	Width dependence of mobility reduction coefficient at TR	—	0
NEFF	Effective substrate doping	m^{-3}	5e+23
NEFFEDGE	Effective substrate doping of edge transistors	m^{-3}	5e+23
NFA	First coefficient of flicker noise	—	8e+22
NFAEDGE	First coefficient of flicker noise of edge transistors	—	8e+22
NFAEDGELW	First coefficient of flicker noise for 1 um**2 channel area	—	8e+22
NFALW	First coefficient of flicker noise for 1 um**2 channel area	—	8e+22
NFB	Second coefficient of flicker noise	—	3e+07
NFBEDGE	Second coefficient of flicker noise of edge transistors	—	3e+07
NFBEDGELW	Second coefficient of flicker noise for 1 um**2 channel area	—	3e+07
NFBLW	Second coefficient of flicker noise for 1 um**2 channel area	—	3e+07
NFC	Third coefficient of flicker noise	V^{-1}	0
NFCEDGE	Third coefficient of flicker noise of edge transistors	V^{-1}	0
NFCEDGELW	Third coefficient of flicker noise for 1 um**2 channel area	V^{-1}	0
NFCLW	Third coefficient of flicker noise for 1 um**2 channel area	V^{-1}	0
NOV	Effective doping of overlap region	m^{-3}	5e+25
NOVD	Effective doping of overlap region for drain side	m^{-3}	5e+25
NOVDO	Effective doping of overlap region for drain side	m^{-3}	5e+25
NOVO	Effective doping of overlap region	m^{-3}	5e+25
NP	Gate poly-silicon doping	m^{-3}	1e+26
NPCK	Pocket doping level	m^{-3}	1e+24
NPCKW	Width dependence of pocket doping NPCK due to segregation	—	0

Table 2.92: PSP103VA MOSFET Device Model Parameters

Parameter	Description	Units	Default
NPL	Length dependence of gate poly-silicon doping	—	0
NPO	Geometry-independent gate poly-silicon doping	m^{-3}	1e+26
NSLP	Effective doping bias-dependence parameter	V	0.05
NSLPO	Effective doping bias-dependence parameter	V	0.05
NSUBEDGEL	Length dependence of edge transistor substrate doping	—	0
NSUBEDGELW	Area dependence of edge transistor substrate doping	—	0
NSUBEDGEO	Geometry independent substrate doping of edge transistors	m^{-3}	5e+23
NSUBEDGEW	Width dependence of edge transistor substrate doping	—	0
NSUBO	Geometry independent substrate doping	m^{-3}	3e+23
NSUBW	Width dependence of background doping NSUBO due to segregation	—	0
PBOT	Grading coefficient of bottom component for source-bulk junction	—	0.5
PBOTD	Grading coefficient of bottom component for drain-bulk junction	—	0.5
PBRBOT	Breakdown onset tuning parameter of bottom component for source-bulk junction	V	4
PBRBOTD	Breakdown onset tuning parameter of bottom component for drain-bulk junction	V	4
PBRGAT	Breakdown onset tuning parameter of gate-edge component for source-bulk junction	V	4
PBRGATD	Breakdown onset tuning parameter of gate-edge component for drain-bulk junction	V	4
PBRSTI	Breakdown onset tuning parameter of STI-edge component for source-bulk junction	V	4
PBRSTID	Breakdown onset tuning parameter of STI-edge component for drain-bulk junction	V	4
PGAT	Grading coefficient of gate-edge component for source-bulk junction	—	0.5
PGATD	Grading coefficient of gate-edge component for drain-bulk junction	—	0.5
PHIGBOT	Zero-temperature bandgap voltage of bottom component for source-bulk junction	V	1.16
PHIGBOTD	Zero-temperature bandgap voltage of bottom component for drain-bulk junction	V	1.16
PHIGGAT	Zero-temperature bandgap voltage of gate-edge component for source-bulk junction	V	1.16

Table 2.92: PSP103VA MOSFET Device Model Parameters

Parameter	Description	Units	Default
PHIGGATD	Zero-temperature bandgap voltage of gate-edge component for drain-bulk junction	V	1.16
PHIGSTI	Zero-temperature bandgap voltage of STI-edge component for source-bulk junction	V	1.16
PHIGSTID	Zero-temperature bandgap voltage of STI-edge component for drain-bulk junction	V	1.16
PKUO	Cross-term dependence of KUO	—	0
PKVTHO	Cross-term dependence of KVTHO	—	0
PLA1	Coefficient for the length dependence of A1	—	0
PLA3	Coefficient for the length dependence of A3	—	0
PLA4	Coefficient for the length dependence of A4	$V^{-1/2}$	0
PLAGIDL	Coefficient for the length dependence of AGIDL	A/V^3	0
PLAGIDLD	Coefficient for the length dependence of AGIDL for drain side	A/V^3	0
PLALP	Coefficient for the length dependence of ALP	—	0
PLALP1	Coefficient for the length dependence of ALP1	V	0
PLALP2	Coefficient for the length dependence of ALP2	V^{-1}	0
PLAX	Coefficient for the length dependence of AX	—	0
PLBETN	Coefficient for the length dependence of BETN	$m^2/(Vs)$	0
PLBETNEDGE	Coefficient for the length dependence of BETNEDGE	$m^2/(Vs)$	0
PLCF	Coefficient for the length dependence of CF	—	0
PLCFEDGE	Coefficient for the length dependence of CFEDGE	—	0
PLCFR	Coefficient for the length dependence of CFR	F	0
PLCFRD	Coefficient for the length dependence of CFR for drain side	F	0
PLCGBOV	Coefficient for the length dependence of CGBOV	F	0
PLCGOV	Coefficient for the length dependence of CGOV	F	0
PLCGOVD	Coefficient for the length dependence of CGOV for drain side	F	0
PLCOX	Coefficient for the length dependence of COX	F	0
PLCS	Coefficient for the length dependence of CS	—	0
PLCT	Coefficient for the length dependence of CT	—	0
PLCTEDGE	Coefficient for the length dependence of CTEDGE	—	0
PLDELVTAC	Coefficient for the length dependence of DELVTAC	V	0

Table 2.92: PSP103VA MOSFET Device Model Parameters

Parameter	Description	Units	Default
PLDPHIB	Coefficient for the length dependence of DPHIB	V	0
PLDPHIBEDGE	Coefficient for the length dependence of DPHIBEDGE	V	0
PLFACNEFFAC	Coefficient for the length dependence of FACNEFFAC	—	0
PLFNTEXC	Coefficient for the length dependence of FNTEXC	—	0
PLGFACNUD	Coefficient for the length dependence of GFACNUD	—	0
PLIGINV	Coefficient for the length dependence of IGINV	A	0
PLIGOV	Coefficient for the length dependence of IGOV	A	0
PLIGOVD	Coefficient for the length dependence of IGOV for drain side	A	0
PLKUOWE	Coefficient for the length dependence part of KUOWE	—	0
PLKVTHOWE	Coefficient for the length dependence part of KVTHOWE	—	0
PLMUE	Coefficient for the length dependence of MUE	m/V	0
PLNEFF	Coefficient for the length dependence of NEFF	m^{-3}	0
PLNEFFEDGE	Coefficient for the length dependence of NEFFEDGE	m^{-3}	0
PLNFA	Coefficient for the length dependence of NFA	—	0
PLNFAEDGE	Coefficient for the length dependence of NFAEDGE	—	0
PLNFB	Coefficient for the length dependence of NFB	—	0
PLNFBEDGE	Coefficient for the length dependence of NFBEDGE	—	0
PLNFC	Coefficient for the length dependence of NFC	V^{-1}	0
PLNFCEDGE	Coefficient for the length dependence of NFCEDGE	V^{-1}	0
PLNOV	Coefficient for the length dependence of NOV	m^{-3}	0
PLNOVD	Coefficient for the length dependence of NOV for drain side	m^{-3}	0
PLNP	Coefficient for the length dependence of NP	m^{-3}	0
PLPSCE	Coefficient for the length dependence of PSCE	—	0
PLPSCEEDGE	Coefficient for the length dependence of PSCEEDGE	—	0
PLRS	Coefficient for the length dependence of RS	Ω	0
PLSTBET	Coefficient for the length dependence of STBET	—	0

Table 2.92: PSP103VA MOSFET Device Model Parameters

Parameter	Description	Units	Default
PLSTBETEDGE	Coefficient for the length dependence of STBETEDGE	—	0
PLSTTHESAT	Coefficient for the length dependence of STTHESAT	—	0
PLSTVFB	Coefficient for the length dependence of STVFB	V/K	0
PLSTVFBEDGE	Coefficient for the length dependence of STVFBEDGE	V/K	0
PLTHESAT	Coefficient for the length dependence of THESAT	V^{-1}	0
PLTHESATB	Coefficient for the length dependence of THESATB	V^{-1}	0
PLTHESATG	Coefficient for the length dependence of THESATG	V^{-1}	0
PLVFB	Coefficient for the length dependence of VFB	V	0
PLWA1	Coefficient for the length times width dependence of A1	—	0
PLWA3	Coefficient for the length times width dependence of A3	—	0
PLWA4	Coefficient for the length times width dependence of A4	$V^{-1/2}$	0
PLWAGIDL	Coefficient for the length times width dependence of AGIDL	A/V^3	0
PLWAGIDLD	Coefficient for the length times width dependence of AGIDL for drain side	A/V^3	0
PLWALP	Coefficient for the length times width dependence of ALP	—	0
PLWALP1	Coefficient for the length times width dependence of ALP1	V	0
PLWALP2	Coefficient for the length times width dependence of ALP2	V^{-1}	0
PLWAX	Coefficient for the length times width dependence of AX	—	0
PLWBETN	Coefficient for the length times width dependence of BETN	$m^2/(Vs)$	0
PLWBETNEDGE	Coefficient for the length times width dependence of BETNEDGE	$m^2/(Vs)$	0
PLWCF	Coefficient for the length times width dependence of CF	—	0
PLWCFEDGE	Coefficient for the length times width dependence of CFEDGE	—	0
PLWCFR	Coefficient for the length times width dependence of CFR	F	0

Table 2.92: PSP103VA MOSFET Device Model Parameters

Parameter	Description	Units	Default
PLWCFRD	Coefficient for the length times width dependence of CFR for drain side	F	0
PLWCGBOV	Coefficient for the length times width dependence of CGBOV	F	0
PLWCGOV	Coefficient for the length times width dependence of CGOV	F	0
PLWCGOVD	Coefficient for the length times width dependence of CGOV for drain side	F	0
PLWCOX	Coefficient for the length times width dependence of COX	F	0
PLWCS	Coefficient for the length times width dependence of CS	—	0
PLWCT	Coefficient for the length times width dependence of CT	—	0
PLWCTEDGE	Coefficient for the length times width dependence of CTEDGE	—	0
PLWDELVTAC	Coefficient for the length times width dependence of DELVTAC	V	0
PLWDPHIB	Coefficient for the length times width dependence of DPHIB	V	0
PLWDPHIBEDGE	Coefficient for the length times width dependence of DPHIBEDGE	V	0
PLWFACNEFFAC	Coefficient for the length times width dependence of FACNEFFAC	—	0
PLWFNTEXC	Coefficient for the length times width dependence of FNTEXC	—	0
PLWGFACNUD	Coefficient for the length times width dependence of GFACNUD	—	0
PLWIGINV	Coefficient for the length times width dependence of IGINV	A	0
PLWIGOV	Coefficient for the length times width dependence of IGOV	A	0
PLWIGOVD	Coefficient for the length times width dependence of IGOV for drain side	A	0
PLWKUOWE	Coefficient for the length times width dependence part of KUOWE	—	0
PLWKVTHOWE	Coefficient for the length times width dependence part of KVTHOWE	—	0
PLWMUE	Coefficient for the length times width dependence of MUE	m/V	0
PLWNEFF	Coefficient for the length times width dependence of NEFF	m^{-3}	0

Table 2.92: PSP103VA MOSFET Device Model Parameters

Parameter	Description	Units	Default
PLWNEFFEDGE	Coefficient for the length times width dependence of NEFFEDGE	m^{-3}	0
PLWNFA	Coefficient for the length times width dependence of NFA	—	0
PLWNFAEDGE	Coefficient for the length times width dependence of NFAEDGE	—	0
PLWNFB	Coefficient for the length times width dependence of NFB	—	0
PLWNFBEDGE	Coefficient for the length times width dependence of NFBEDGE	—	0
PLWNFC	Coefficient for the length times width dependence of NFC	V^{-1}	0
PLWNFCEDGE	Coefficient for the length times width dependence of NFCEDGE	V^{-1}	0
PLWNOV	Coefficient for the length times width dependence of NOV	m^{-3}	0
PLWNOVD	Coefficient for the length times width dependence of NOV for drain side	m^{-3}	0
PLWNP	Coefficient for the length times width dependence of NP	m^{-3}	0
PLWPSCE	Coefficient for the length times width dependence of PSCE	—	0
PLWPSCEEDGE	Coefficient for the length times width dependence of PSCEEDGE	—	0
PLWRS	Coefficient for the length times width dependence of RS	Ω	0
PLWSTBET	Coefficient for the length times width dependence of STBET	—	0
PLWSTBETEDGE	Coefficient for the length times width dependence of STBETEDGE	—	0
PLWSTTHESAT	Coefficient for the length times width dependence of STTHESAT	—	0
PLWSTVFB	Coefficient for the length times width dependence of STVFB	V/K	0
PLWSTVFBEDGE	Coefficient for the length times width dependence of STVFBEDGE	V/K	0
PLWTHESAT	Coefficient for the length times width dependence of THESAT	V^{-1}	0
PLWTHESATB	Coefficient for the length times width dependence of THESATB	V^{-1}	0
PLWTHESATG	Coefficient for the length times width dependence of THESATG	V^{-1}	0

Table 2.92: PSP103VA MOSFET Device Model Parameters

Parameter	Description	Units	Default
PLWVFB	Coefficient for the length times width dependence of VFB	V	0
PLWXCOR	Coefficient for the length times width dependence of XCOR	V^{-1}	0
PLXCOR	Coefficient for the length dependence of XCOR	V^{-1}	0
POA1	Coefficient for the geometry independent part of A1	—	1
POA2	Coefficient for the geometry independent part of A2	V	10
POA3	Coefficient for the geometry independent part of A3	—	1
POA4	Coefficient for the geometry independent part of A4	$V^{-1/2}$	0
POAGIDL	Coefficient for the geometry independent part of AGIDL	A/V^3	0
POAGIDLD	Coefficient for the geometry independent part of AGIDL for drain side	A/V^3	0
POALP	Coefficient for the geometry independent part of ALP	—	0.01
POALP1	Coefficient for the geometry independent part of ALP1	V	0
POALP2	Coefficient for the geometry independent part of ALP2	V^{-1}	0
POAX	Coefficient for the geometry independent part of AX	—	3
POBETN	Coefficient for the geometry independent part of BETN	$m^2/(Vs)$	0.07
POBETNEDGE	Coefficient for the geometry independent part of BETNEDGE	$m^2/(Vs)$	0.0005
POBGIDL	Coefficient for the geometry independent part of BGIDL	V	41
POBGIDLD	Coefficient for the geometry independent part of BGIDL for drain side	V	41
POCF	Coefficient for the geometry independent part of CF	—	0
POCFB	Coefficient for the geometry independent part of CFB	V^{-1}	0
POCFBEDGE	Coefficient for the geometry independent part of CFBEDGE	V^{-1}	0
POCFD	Coefficient for the geometry independent part of CFD	V^{-1}	0

Table 2.92: PSP103VA MOSFET Device Model Parameters

Parameter	Description	Units	Default
POCFDEDGE	Coefficient for the geometry independent part of CFDEDGE	V^{-1}	0
POCFEDGE	Coefficient for the geometry independent part of CFEDGE	—	0
POCFR	Coefficient for the geometry independent part of CFR	F	0
POCFRD	Coefficient for the geometry independent part of CFR for drain side	F	0
POCGBOV	Coefficient for the geometry independent part of CGBOV	F	0
POCGIDL	Coefficient for the geometry independent part of CGIDL	—	0
POCGIDLD	Coefficient for the geometry independent part of CGIDL for drain side	—	0
POCGOV	Coefficient for the geometry independent part of CGOV	F	1e-15
POCGOVD	Coefficient for the geometry independent part of CGOV for drain side	F	1e-15
POCHIB	Coefficient for the geometry independent part of CHIB	V	3.1
POCOX	Coefficient for the geometry independent part of COX	F	1e-14
POCS	Coefficient for the geometry independent part of CS	—	0
POCT	Coefficient for the geometry independent part of CT	—	0
POCTEDGE	Coefficient for the geometry independent part of CTEDGE	—	0
PODELVTAC	Coefficient for the geometry independent part of DELVTAC	V	0
PODNSUB	Coefficient for the geometry independent part of DNSUB	V^{-1}	0
PODPHIB	Coefficient for the geometry independent part of DPHIB	V	0
PODPHIBEDGE	Coefficient for the geometry independent part of DPHIBEDGE	V	0
PODVSBNUD	Coefficient for the geometry independent part of DVSBNUD	V	1
POEF	Coefficient for the flicker noise frequency exponent	—	1
POEFEDGE	Coefficient for the geometry independent part of EFEDGE	—	1

Table 2.92: PSP103VA MOSFET Device Model Parameters

Parameter	Description	Units	Default
POEPSROX	Coefficient for the geometry independent part of EPSOX	—	3.9
POFACNEFFAC	Coefficient for the geometry independent part of FACNEFFAC	—	1
POFETA	Coefficient for the geometry independent part of FETA	—	1
POFNT	Coefficient for the geometry independent part of FNT	—	1
POFNTEDGE	Coefficient for the geometry independent part of FNTEDGE	—	1
POFNTEXC	Coefficient for the geometry independent part of FNTEXC	—	0
POGC2	Coefficient for the geometry independent part of GC2	—	0.375
POGC3	Coefficient for the geometry independent part of GC3	—	0.063
POGCO	Coefficient for the geometry independent part of GCO	—	0
POGFACNUD	Coefficient for the geometry independent part of GFACNUD	—	1
POIGINV	Coefficient for the geometry independent part of IGINV	A	0
POIGOV	Coefficient for the geometry independent part of IGOV	A	0
POIGOVD	Coefficient for the geometry independent part of IGOV for drain side	A	0
POKUOWE	Coefficient for the geometry independent part of KUOWE	—	0
POKVTHOWE	Coefficient for the geometry independent part of KVTHOWE	—	0
POMUE	Coefficient for the geometry independent part of MUE	m/V	0.5
PONEFF	Coefficient for the geometry independent part of NEFF	m^{-3}	5e+23
PONEFFEDGE	Coefficient for the geometry independent part of NEFFEDGE	m^{-3}	5e+23
PONFA	Coefficient for the geometry independent part of NFA	—	8e+22
PONFAEDGE	Coefficient for the geometry independent part of NFAEDGE	—	8e+22
PONFB	Coefficient for the geometry independent part of NFB	—	3e+07

Table 2.92: PSP103VA MOSFET Device Model Parameters

Parameter	Description	Units	Default
PONFBEDGE	Coefficient for the geometry independent part of NFBEDGE	—	3e+07
PONFC	Coefficient for the geometry independent part of NFC	V^{-1}	0
PONFCEDGE	Coefficient for the geometry independent part of NFCEDGE	V^{-1}	0
PONOV	Coefficient for the geometry independent part of NOV	m^{-3}	5e+25
PONOVD	Coefficient for the geometry independent part of NOV for drain side	m^{-3}	5e+25
PONP	Coefficient for the geometry independent part of NP	m^{-3}	1e+26
PONSLP	Coefficient for the geometry independent part of NSLP	V	0.05
POPSCE	Coefficient for the geometry independent part of PSCE	—	0
POPSCEB	Coefficient for the geometry independent part of PSCEB	V^{-1}	0
POPSCEBEDGE	Coefficient for the geometry independent part of PSCEBEDGE	V^{-1}	0
POPSCED	Coefficient for the geometry independent part of PSCED	V^{-1}	0
POPSCEDEDGE	Coefficient for the geometry independent part of PSCEDEDGE	V^{-1}	0
POPSCEEDGE	Coefficient for the geometry independent part of PSCEEDGE	—	0
PORS	Coefficient for the geometry independent part of RS	Ω	30
PORSB	Coefficient for the geometry independent part of RSB	V^{-1}	0
PORSG	Coefficient for the geometry independent part of RSG	V^{-1}	0
POSTA2	Coefficient for the geometry independent part of STA2	V	0
POSTBET	Coefficient for the geometry independent part of STBET	—	1
POSTBETEDGE	Coefficient for the geometry independent part of STBETEDGE	—	1
POSTBGIDL	Coefficient for the geometry independent part of STBGIDL	V/K	0
POSTBGIDLD	Coefficient for the geometry independent part of STBGIDL for drain side	V/K	0

Table 2.92: PSP103VA MOSFET Device Model Parameters

Parameter	Description	Units	Default
POSTCS	Coefficient for the geometry independent part of STCS	—	0
POSTIG	Coefficient for the geometry independent part of STIG	—	2
POSTMUE	Coefficient for the geometry independent part of STMUE	—	0
POSTRS	Coefficient for the geometry independent part of STRS	—	1
POSTTHEMU	Coefficient for the geometry independent part of STTHEMU	—	1.5
POSTTHESAT	Coefficient for the geometry independent part of STTHESAT	—	1
POSTVFB	Coefficient for the geometry independent part of STVFB	V/K	0.0005
POSTVFBEDGE	Coefficient for the geometry independent part of STVFBEDGE	V/K	0
POSTXCOR	Coefficient for the geometry independent part of STXCOR	—	0
POTHEMU	Coefficient for the geometry independent part of THEMU	—	1.5
POTHESAT	Coefficient for the geometry independent part of THESAT	V^{-1}	1
POTHESATB	Coefficient for the geometry independent part of THESATB	V^{-1}	0
POTHESATG	Coefficient for the geometry independent part of THESATG	V^{-1}	0
POTOX	Coefficient for the geometry independent part of TOX	m	2e-09
POTOXOV	Coefficient for the geometry independent part of TOXOV	m	2e-09
POTOXOVD	Coefficient for the geometry independent part of TOXOV for drain side	m	2e-09
POVFB	Coefficient for the geometry independent part of VFB	V	-1
POVFBEDGE	Coefficient for the geometry independent part of VFBEDGE	V	-1
POVNSUB	Coefficient for the geometry independent part of VNSUB	V	0
POVP	Coefficient for the geometry independent part of VP	V	0.05
POVSBNUD	Coefficient for the geometry independent part of VSBNUD	V	0

Table 2.92: PSP103VA MOSFET Device Model Parameters

Parameter	Description	Units	Default
POXCOR	Coefficient for the geometry independent part of XCOR	V^{-1}	0
PSCE	Subthreshold slope coefficient for short channel transistor	—	0
PSCEB	Bulk voltage dependence parameter of subthreshold slope coefficient for short channel transistor	V^{-1}	0
PSCEBEDGE	Bulk voltage dependence parameter of subthreshold slope coefficient for short channel edge transistors	V^{-1}	0
PSCEBEDGEO	Bulk voltage dependence parameter of subthreshold slope coefficient for short channel edge transistors	V^{-1}	0
PSCEBO	Bulk voltage dependence parameter of subthreshold slope coefficient for short channel transistor	V^{-1}	0
PSCED	Drain voltage dependence parameter of subthreshold slope coefficient for short channel transistor	V^{-1}	0
PSCEDEDGE	Drain voltage dependence parameter of subthreshold slope coefficient for short channel edge transistors	V^{-1}	0
PSCEDEDGEO	Drain voltage dependence parameter of subthreshold slope coefficient for short channel edge transistors	V^{-1}	0
PSCEDO	Drain voltage dependence parameter of subthreshold slope coefficient for short channel transistor	V^{-1}	0
PSCEEDGE	Subthreshold slope coefficient for short channel edge transistors	—	0
PSCEEDGEL	Length dependence of subthreshold slope coefficient for short channel edge transistors	—	0
PSCEEDGELEXP	Exponent for length dependence of subthreshold slope coefficient for short channel edge transistors	—	2
PSCEEDGEW	Exponent for length dependence of subthreshold slope coefficient for short channel edge transistor	—	0
PSCEL	Length dependence of subthreshold slope coefficient for short channel transistor	—	0
PSCELEXP	Exponent for length dependence of subthreshold slope coefficient for short channel transistor	—	2
PSCEW	Exponent for length dependence of subthreshold slope coefficient for short channel transistor	—	0

Table 2.92: PSP103VA MOSFET Device Model Parameters

Parameter	Description	Units	Default
PSTI	Grading coefficient of STI-edge component for source-bulk junction	—	0.5
PSTID	Grading coefficient of STI-edge component for drain-bulk junction	—	0.5
PWA1	Coefficient for the width dependence of A1	—	0
PWA3	Coefficient for the width dependence of A3	—	0
PWA4	Coefficient for the width dependence of A4	$V^{-1/2}$	0
PWAGIDL	Coefficient for the width dependence of AGIDL	A/V^3	0
PWAGIDLD	Coefficient for the width dependence of AGIDL for drain side	A/V^3	0
PWALP	Coefficient for the width dependence of ALP	—	0
PWALP1	Coefficient for the width dependence of ALP1	V	0
PWALP2	Coefficient for the width dependence of ALP2	V^{-1}	0
PWAX	Coefficient for the width dependence of AX	—	0
PWBETN	Coefficient for the width dependence of BETN	$m^2/(Vs)$	0
PWBETNEDGE	Coefficient for the width dependence of BETNEDGE	$m^2/(Vs)$	0
PWCF	Coefficient for the width dependence of CF	—	0
PWCFEDGE	Coefficient for the width dependence of CFEDGE	—	0
PWCFR	Coefficient for the width dependence of CFR	F	0
PWCFRD	Coefficient for the width dependence of CFR for drain side	F	0
PWCGBOV	Coefficient for the width dependence of CGBOV	F	0
PWCGOV	Coefficient for the width dependence of CGOV	F	0
PWCGOVD	Coefficient for the width dependence of CGOV for drain side	F	0
PWCOX	Coefficient for the width dependence of COX	F	0
PWCS	Coefficient for the width dependence of CS	—	0
PWCT	Coefficient for the width dependence of CT	—	0
PWCTEDGE	Coefficient for the width dependence of CTEDGE	—	0
PWDELVTAC	Coefficient for the width dependence of DELVTAC	V	0
PWDPHIB	Coefficient for the width dependence of DPHIB	V	0
PWDPHIBEDGE	Coefficient for the width dependence of DPHIBEDGE	V	0
PWFACNEFFAC	Coefficient for the width dependence of FACNEFFAC	—	0
PWFNTEXC	Coefficient for the width dependence of FNTEXC	—	0

Table 2.92: PSP103VA MOSFET Device Model Parameters

Parameter	Description	Units	Default
PWGFACNUD	Coefficient for the width dependence of GFACNUD	—	0
PWIGINV	Coefficient for the width dependence of IGINV	A	0
PWIGOV	Coefficient for the width dependence of IGOV	A	0
PWIGOVD	Coefficient for the width dependence of IGOV for drain side	A	0
PWKUOWE	Coefficient for the width dependence part of KUOWE	—	0
PWKVTHOWE	Coefficient for the width dependence part of KVTHOWE	—	0
PWMUE	Coefficient for the width dependence of MUE	m/V	0
PWNEFF	Coefficient for the width dependence of NEFF	m^{-3}	0
PWNEFFEDGE	Coefficient for the width dependence of NEFFEDGE	m^{-3}	0
PWNFA	Coefficient for the width dependence of NFA	—	0
PWNFAEDGE	Coefficient for the width dependence of NFAEDGE	—	0
PWNFB	Coefficient for the width dependence of NFB	—	0
PWNFBEDGE	Coefficient for the width dependence of NFBEDGE	—	0
PWNFC	Coefficient for the width dependence of NFC	V^{-1}	0
PWNFCEDGE	Coefficient for the width dependence of NFCEDGE	V^{-1}	0
PWNOV	Coefficient for the width dependence of NOV	m^{-3}	0
PWNOVD	Coefficient for the width dependence of NOV for drain side	m^{-3}	0
PWNP	Coefficient for the width dependence of NP	m^{-3}	0
PWPSCE	Coefficient for the width dependence of PSCE	—	0
PWPSCEEDGE	Coefficient for the width dependence of PSCEEDGE	—	0
PWRS	Coefficient for the width dependence of RS	Ω	0
PWSTBET	Coefficient for the width dependence of STBET	—	0
PWSTBETEDGE	Coefficient for the width dependence of STBETEDGE	—	0
PWSTTHESAT	Coefficient for the width dependence of STTHESAT	—	0
PWSTVFB	Coefficient for the width dependence of STVFB	V/K	0
PWSTVFBEDGE	Coefficient for the width dependence of STVFBEDGE	V/K	0

Table 2.92: PSP103VA MOSFET Device Model Parameters

Parameter	Description	Units	Default
PWTHESAT	Coefficient for the width dependence of THESAT	V^{-1}	0
PWTHESATB	Coefficient for the width dependence of THESATB	V^{-1}	0
PWTHESATG	Coefficient for the width dependence of THESATG	V^{-1}	0
PWVFB	Coefficient for the width dependence of VFB	V	0
PWXCOR	Coefficient for the width dependence of XCOR	V^{-1}	0
QMC	Quantum-mechanical correction factor	—	1
RBULK	Bulk resistance between node BP and BI	Ω	0
RBULKO	Bulk resistance between node BP and BI	Ω	0
RDE	External drain resistance	Ω	0
RG	Gate resistance	Ω	0
RGO	Gate resistance	Ω	0
RINT	Contact resistance between silicide and ploy	$\Omega\ m^2$	0
RJUND	Drain-side bulk resistance between node BI and BD	Ω	0
RJUNDO	Drain-side bulk resistance between node BI and BD	Ω	0
RJUNS	Source-side bulk resistance between node BI and BS	Ω	0
RJUNSO	Source-side bulk resistance between node BI and BS	Ω	0
RS	Series resistance at TR	Ω	30
RSB	Back-bias dependence of series resistance	V^{-1}	0
RSBO	Back-bias dependence of series resistance	V^{-1}	0
RSE	External source resistance	Ω	0
RSG	Gate-bias dependence of series resistance	V^{-1}	0
RSGO	Gate-bias dependence of series resistance	V^{-1}	0
RSH	Sheet resistance of source diffusion	Ω/□	0
RSHD	Sheet resistance of drain diffusion	Ω/□	0
RSHG	Gate electrode diffusion sheet resistance	Ω/□	0
RSW1	Source/drain series resistance for 1 um wide channel at TR	Ω	50
RSW2	Higher-order width scaling of RS	—	0
RVPOLY	Vertical poly resistance	$\Omega\ m^2$	0
RWELL	Well resistance between node BI and B	Ω	0
RWELLO	Well resistance between node BI and B	Ω	0

Table 2.92: PSP103VA MOSFET Device Model Parameters

Parameter	Description	Units	Default
SAREF	Reference distance between OD-edge and poly from one side	m	1e-06
SBREF	Reference distance between OD-edge and poly from other side	m	1e-06
SCREF	Distance between OD-edge and well edge of a reference device	m	1e-06
STA2	Temperature dependence of A2	V	0
STA2O	Temperature dependence of A2	V	0
STBET	Temperature dependence of BETN	—	1
STBETEDGE	Temperature dependence of BETNEDGE	—	1
STBETEDGEL	Length dependence of temperature dependence of BETNEDGE	—	0
STBETEDGELW	Area dependence of temperature dependence of BETNEDGE	—	0
STBETEDGEO	Geometry independent temperature dependence of BETNEDGE	—	1
STBETEDGEW	Width dependence of temperature dependence of BETNEDGE	—	0
STBETL	Length dependence of temperature dependence of BETN	—	0
STBETLW	Area dependence of temperature dependence of BETN	—	0
STBETO	Geometry independent temperature dependence of BETN	—	1
STBETW	Width dependence of temperature dependence of BETN	—	0
STBGIDL	Temperature dependence of BGIDL	V/K	0
STBGIDLD	Temperature dependence of BGIDL for drain side	V/K	0
STBGIDLDO	Temperature dependence of BGIDL for drain side	V/K	0
STBGIDLO	Temperature dependence of BGIDL	V/K	0
STCS	Temperature dependence of CS	—	0
STCSO	Temperature dependence of CS	—	0
STETAO	Eta0 shift factor related to VTHO change	m	0
STFBBTBOT	Temperature scaling parameter for band-to-band tunneling of bottom component for source-bulk junction	1/K	-0.001
STFBBTBOTD	Temperature scaling parameter for band-to-band tunneling of bottom component for drain-bulk junction	1/K	-0.001

Table 2.92: PSP103VA MOSFET Device Model Parameters

Parameter	Description	Units	Default
STFBBTGAT	Temperature scaling parameter for band-to-band tunneling of gate-edge component for source-bulk junction	1/K	-0.001
STFBBTGATD	Temperature scaling parameter for band-to-band tunneling of gate-edge component for drain-bulk junction	1/K	-0.001
STFBBTSTI	Temperature scaling parameter for band-to-band tunneling of STI-edge component for source-bulk junction	1/K	-0.001
STFBBTSTID	Temperature scaling parameter for band-to-band tunneling of STI-edge component for drain-bulk junction	1/K	-0.001
STIG	Temperature dependence of IGINV and IGOV	—	2
STIGO	Temperature dependence of IGINV and IGOV	—	2
STMUE	Temperature dependence of MUE	—	0
STMUEO	Temperature dependence of MUE	—	0
STRS	Temperature dependence of RS	—	1
STRSO	Temperature dependence of RS	—	1
STTHEMU	Temperature dependence of THEMU	—	1.5
STTHEMUO	Temperature dependence of THEMU	—	1.5
STTHESAT	Temperature dependence of THESAT	—	1
STTHESATL	Length dependence of temperature dependence of THESAT	—	0
STTHESATLW	Area dependence of temperature dependence of THESAT	—	0
STTHESATO	Geometry independent temperature dependence of THESAT	—	1
STTHESATW	Width dependence of temperature dependence of THESAT	—	0
STVFB	Temperature dependence of VFB	V/K	0.0005
STVFBEDGE	Temperature dependence of VFBEDGE	V/K	0.0005
STVFBEDGEL	Length dependence of temperature dependence of VFBEDGE	V/K	0
STVFBEDGELW	Area dependence of temperature dependence of VFBEDGE	V/K	0
STVFBEDGEO	Geometry-independent temperature dependence of VFBEDGE	V/K	0.0005
STVFBEDGEW	Width dependence of temperature dependence of VFBEDGE	V/K	0

Table 2.92: PSP103VA MOSFET Device Model Parameters

Parameter	Description	Units	Default
STVFBL	Length dependence of temperature dependence of VFB	V/K	0
STVFBLW	Area dependence of temperature dependence of VFB	V/K	0
STVFBO	Geometry-independent temperature dependence of VFB	V/K	0.0005
STVFBW	Width dependence of temperature dependence of VFB	V/K	0
STXCOR	Temperature dependence of XCOR	—	0
STXCORO	Temperature dependence of XCOR	—	0
SWDELVTAC	Flag for separate capacitance calculation; 0=off, 1=on	—	0
SWEDGE	Flag for drain current of edge transistors; 0=off, 1=on	—	0
SWGEO	Flag for geometrical model, 0=local, 1=global, 2=binning	—	1
SWGIDL	Flag for GIDL current, 0=turn off IGIDL	—	0
SWIGATE	Flag for gate current, 0=turn off IG	—	0
SWIGN	Flag for induced gate noise; 0=off, 1=on	—	1
SWIMPACT	Flag for impact ionization current, 0=turn off II	—	0
SWJUNASYM	Flag for asymmetric junctions; 0=symmetric, 1=asymmetric	—	0
SWJUNCAP	Flag for juncap, 0=turn off juncap	—	0
SWJUNEXP	Flag for JUNCAP-express; 0=full model, 1=express model	—	0
SWNUD	Flag for NUD-effect; 0=off, 1=on, 2=on+CV-correction	—	0
THEMU	Mobility reduction exponent at TR	—	1.5
THEMUO	Mobility reduction exponent at TR	—	1.5
THESAT	Velocity saturation parameter at TR	V^{-1}	1
THESATB	Back-bias dependence of velocity saturation	V^{-1}	0
THESATBO	Back-bias dependence of velocity saturation	V^{-1}	0
THESATG	Gate-bias dependence of velocity saturation	V^{-1}	0
THESATGO	Gate-bias dependence of velocity saturation	V^{-1}	0
THESATL	Length dependence of THESAT	V^{-1}	0.05
THESATLEXP	Exponent for length dependence of THESAT	—	1
THESATLW	Area dependence of velocity saturation parameter	—	0

Table 2.92: PSP103VA MOSFET Device Model Parameters

Parameter	Description	Units	Default
THESATO	Geometry independent velocity saturation parameter at TR	V^{-1}	0
THESATW	Width dependence of velocity saturation parameter	—	0
TKUO	Temperature dependence of KUO	—	0
TOX	Gate oxide thickness	m	2e-09
TOXO	Gate oxide thickness	m	2e-09
TOXOV	Overlap oxide thickness	m	2e-09
TOXOVD	Overlap oxide thickness for drain side	m	2e-09
TOXOVDO	Overlap oxide thickness for drain side	m	2e-09
TOXOVO	Overlap oxide thickness	m	2e-09
TR	nominal (reference) temperature	°C	21
TRJ	Reference temperature	°C	21
TYPE	Channel type parameter, +1=NMOS -1=PMOS	—	1
UO	Zero-field mobility at TR	$m^2/(Vs)$	0.05
VBIRBOT	Built-in voltage at the reference temperature of bottom component for source-bulk junction	V	1
VBIRBOTD	Built-in voltage at the reference temperature of bottom component for drain-bulk junction	V	1
VBIRGAT	Built-in voltage at the reference temperature of gate-edge component for source-bulk junction	V	1
VBIRGATD	Built-in voltage at the reference temperature of gate-edge component for drain-bulk junction	V	1
VBIRSTI	Built-in voltage at the reference temperature of STI-edge component for source-bulk junction	V	1
VBIRSTID	Built-in voltage at the reference temperature of STI-edge component for drain-bulk junction	V	1
VBRBOT	Breakdown voltage of bottom component for source-bulk junction	V	10
VBRBOTD	Breakdown voltage of bottom component for drain-bulk junction	V	10
VBRGAT	Breakdown voltage of gate-edge component for source-bulk junction	V	10
VBRGATD	Breakdown voltage of gate-edge component for drain-bulk junction	V	10
VBRSTI	Breakdown voltage of STI-edge component for source-bulk junction	V	10
VBRSTID	Breakdown voltage of STI-edge component for drain-bulk junction	V	10

Table 2.92: PSP103VA MOSFET Device Model Parameters

Parameter	Description	Units	Default
VFB	Flat band voltage at TR	V	-1
VFBEDGE	Flat band voltage of edge transistors at TR	V	-1
VFBEDGEO	Geometry-independent flat-band voltage of edge transistors at TR	V	-1
VFBL	Length dependence of flat-band voltage	V	0
VFBLW	Area dependence of flat-band voltage	V	0
VFBO	Geometry-independent flat-band voltage at TR	V	-1
VFBW	Width dependence of flat-band voltage	V	0
VJUNREF	Typical maximum source-bulk junction voltage; usually about 2*VSUP	V	2.5
VJUNREFD	Typical maximum drain-bulk junction voltage; usually about 2*VSUP	V	2.5
VNSUB	Effective doping bias-dependence parameter	V	0
VNSUBO	Effective doping bias-dependence parameter	V	0
VP	CLM logarithm dependence factor	V	0.05
VPO	CLM logarithmic dependence parameter	V	0.05
VSBNUD	Lower Vsb value for NUD-effect	V	0
VSBNUDO	Lower Vsb value for NUD-effect	V	0
WBET	Characteristic width for width scaling of BETN	m	1e-09
WEB	Coefficient for SCB	—	0
WEC	Coefficient for SCC	—	0
WEDGE	Electrical width of edge transistor per side	m	1e-08
WEDGEW	Width dependence of edge WEDGE	—	0
WKUO	Width dependence of KUO	—	0
WKVTHO	Width dependence of KVTHO	—	0
WLOD	Width parameter	m	0
WLODKUO	Width parameter for UO stress effect	—	0
WLODVTH	Width parameter for VTH-stress effect	—	0
WMAX	Dummy parameter to label binning set	m	1
WMIN	Dummy parameter to label binning set	m	0
WOT	Effective channel width reduction per side	m	0
WSEG	Char. length of segregation of background doping NSUBO	m	1e-08
WSEGP	Char. length of segregation of pocket doping NPCK	m	1e-08
WVARL	Length dependence of WVAR	—	0

Table 2.92: PSP103VA MOSFET Device Model Parameters

Parameter	Description	Units	Default
WVARO	Geom. independent difference between actual and programmed field-oxide opening	m	0
WVARW	Width dependence of WVAR	—	0
XCOR	Non-universality factor	V^{-1}	0
XCORL	Length dependence of non-universality parameter	—	0
XCORLW	Area dependence of non-universality parameter	—	0
XCORO	Geometry independent non-universality parameter	V^{-1}	0
XCORW	Width dependence of non-universality parameter	—	0
XJUNGAT	Junction depth of gate-edge component for source-bulk junction	m	1e-07
XJUNGATD	Junction depth of gate-edge component for drain-bulk junction	m	1e-07
XJUNSTI	Junction depth of STI-edge component for source-bulk junction	m	1e-07
XJUNSTID	Junction depth of STI-edge component for drain-bulk junction	m	1e-07

Level 110 MOSFET Tables (BSIM CMG version 110.0.0)

Xyce includes the BSIM CMG Common Multi-gate model version 110. The code in **Xyce** was generated from the BSIM group's Verilog-A input using the default "ifdef" lines provided, and therefore supports only the subset of BSIM CMG features those defaults enable. Instance and model parameters for the BSIM CMG model are given in tables 2.93 and 2.94. Details of the model are documented in the BSIM-CMG technical report[26], available from the BSIM web site at `http://bsim.berkeley.edu/models/bsimcmg/`.

Table 2.93: BSIM-CMG FINFET v110.0.0 Device Instance Parameters

Parameter	Description	Units	Default
ADEJ	Drain junction area (BULKMOD=1 or 2)	m^2	0
ADEO	Drain-to-substrate overlap area through oxide	m^2	0
ASEJ	Source junction area (BULKMOD=1 or 2)	m^2	0
ASEO	Source-to-substrate overlap area through oxide	m^2	0
CDSP	Constant drain-to-source fringe capacitance (all CGEOMOD)	F	0
CGDP	Constant gate-to-drain fringe capacitance (CGEOMOD=1)	—	0
CGSP	Constant gate-to-source fringe capacitance (CGEOMOD=1)	—	0
COVD	Constant gate-to-drain overlap capacitance (CGEOMOD=1)	—	0
COVS	Constant gate-to-source overlap capacitance (CGEOMOD=1)	—	0
D	Diameter of the cylinder (GEOMOD=3)	m	4e-08
FPITCH	Fin pitch	m	8e-08
L	Designed gate length	m	3e-08
LRSD	Length of the source/drain	m	0
M	multiplicity factor	—	1
NF	Number of fingers	—	1
NFIN	Number of fins per finger (real number enables optimization)	—	1
NFINNOM	Nominal number of fins per finger	—	1
NGCON	Number of gate contact (1 or 2 sided)	—	1
NRD	Number of source diffusion squares	—	0
NRS	Number of source diffusion squares	—	0
PDEJ	Drain-to-substrate PN junction perimeter (BULKMOD=1 or 2)	m	0
PDEO	Perimeter of drain-to-substrate overlap region through oxide	m	0

Table 2.93: BSIM-CMG FINFET v110.0.0 Device Instance Parameters

Parameter	Description	Units	Default
PSEJ	Source-to-substrate PN junction perimeter (BULKMOD=1 or 2)	m	0
PSEO	Perimeter of source-to-substrate overlap region through oxide	m	0
TFIN	Body (fin) thickness	m	1.5e-08

Table 2.94: BSIM-CMG FINFET v110.0.0 Device Model Parameters

Parameter	Description	Units	Default
A1	Non-saturation effect parameter for strong inversion Region	—	0
A11	Temperature dependence of A1	—	0
A2	Non-saturation effect parameter for moderate Inversion Region	—	0
A21	Temperature dependence of A2	—	0
ACH_UFCM	Area of the channel for the unified Model	m^2	1
ADEJ	Drain junction area (BULKMOD=1 or 2)	m^2	0
ADEO	Drain-to-substrate overlap area through oxide	m^2	0
ADVTP0	Pre-exponential coefficient for DITS	—	0
ADVTP1	Pre-exponential coefficient for DVTP1	—	0
AEU	Pre-exponential coefficient for EU	—	0
AEUR	Reverse-mode pre-exponential coefficient for EU	—	0
AGIDL	Pre-exponential coefficient for GIDL	—	0
AGISL	Pre-exponential coefficient for GISL	—	6.055e-12
AIGBACC	Parameter for Igb in accumulation	—	0.0136
AIGBACC1	Parameter for Igb in accumulation	—	0
AIGBINV	Parameter for Igb in inversion	—	0.0111
AIGBINV1	Parameter for Igb in inversion	—	0
AIGC	Parameter for Igc in inversion	—	0.0136
AIGC1	Parameter for Igc in inversion	—	0
AIGD	Parameter for Igd in inversion	—	0
AIGD1	Parameter for Igd in inversion	—	0
AIGEN	Thermal generation current parameter	—	0
AIGS	Parameter for Igs in inversion	—	0.0136
AIGS1	Parameter for Igs in inversion	—	0

Table 2.94: BSIM-CMG FINFET v110.0.0 Device Model Parameters

Parameter	Description	Units	Default
ALPHA0	First parameter of Iii	m/V	0
ALPHA01	Temperature dependence of ALPHA0	—	0
ALPHA1	L scaling parameter of Iii	V^{-1}	0
ALPHA11	Temperature dependence ALPHA1	—	0
ALPHA_UFCM	Mobile charge scaling term taking QM effects into account	—	0.5556
ALPHAII0	First parameter of Iii for IIMOD=2	m/V	0
ALPHAII01	Temperature dependence of ALPHAII0	—	0
ALPHAII1	L scaling parameter of Iii for IIMOD=2	V^{-1}	0
ALPHAII11	Temperature dependence of ALPHAII1	—	0
AMEXP	Pre-exponential coefficient for MEXP	—	0
AMEXPR	Pre-exponential coefficient for MEXPR	—	0
APCLM	Pre-exponential coefficient for PCLM	—	0
APCLMR	Reverse-mode pre-exponential coefficient for PCLM	—	0
APSAT	Pre-exponential coefficient for PSAT	—	0
APSATCV	Pre-exponential coefficient for PSATCV	—	0
APTWG	Pre-exponential coefficient for PTWG	—	0
AQMTCEN	Parameter for geometric dependence of Tcen on R/TFIN/HFIN	—	0
ARDSW	Pre-exponential coefficient for RDSW	—	0
ARDW	Pre-exponential coefficient for RDW	—	0
ARSDEND	Extra raised source/drain cross sectional areaat the two ends of the FinFET	m^2	0
ARSW	Pre-exponential coefficient for RSW	—	0
ASEJ	Source junction area (BULKMOD=1 or 2)	m^2	0
ASEO	Source-to-substrate overlap area through oxide	m^2	0
ASHEXP	Exponent to tune RTH dependence of NFINTOTAL	—	1
ASILIEND	Extra silicide cross sectional area at the two ends of the FinFET	m^2	0
ASYMMOD	0: Turn off asymmetry model - forward mode parameters used; 1: Turn on asymmetry model	—	0
AT	Saturation velocity temperature coefficient	—	-0.00156
ATCV	Saturation velocity temperature coefficient for CV	—	0
ATR	Reverse-mode saturation velocity temperature coefficient	—	0

Table 2.94: BSIM-CMG FINFET v110.0.0 Device Model Parameters

Parameter	Description	Units	Default
AUA	Pre-exponential coefficient for UA	—	0
AUAR	Reverse-mode pre-exponential coefficient for UA	—	0
AUD	Pre-exponential coefficient for UD	—	0
AUDR	Reverse-mode pre-exponential coefficient for UD	—	0
AVSAT	Pre-exponential coefficient for VSAT	—	0
AVSAT1	Pre-exponential coefficient for VSAT1	—	0
AVSATCV	Pre-exponential coefficient for VSATCV	—	0
BDVTP0	Exponential coefficient for DITS	—	1e-07
BDVTP1	Exponential coefficient for DVTP1	—	1e-07
BETA0	Vds dependence parameter of Iii	V^{-1}	0
BETAII0	Vds dependence parameter of Iii	V^{-1}	0
BETAII1	Vds dependence parameter of Iii	—	0
BETAII2	Vds dependence parameter of Iii	V	0.1
BEU	Exponential coefficient for EU	—	1e-07
BEUR	Reverse-mode exponential coefficient for EU	—	0
BG0SUB	Bandgap of substrate at 300.15K	—	1.12
BGIDL	Exponential coefficient for GIDL	—	0
BGISL	Exponential coefficient for GISL	—	3e+08
BIGBACC	Parameter for Igb in accumulation	—	0.00171
BIGBINV	Parameter for Igb in inversion	—	0.000949
BIGC	Parameter for Igc in inversion	—	0.00171
BIGD	Parameter for Igd in inversion	—	0
BIGEN	Thermal generation current parameter	—	0
BIGS	Parameter for Igs in inversion	—	0.00171
BMEXP	Exponential coefficient for MEXP	—	1
BMEXPR	Exponential coefficient for MEXPR	—	0
BPCLM	Exponential coefficient for PCLM	—	1e-07
BPCLMR	Reverse-mode exponential coefficient for PCLM	—	0
BPSAT	Exponential coefficient for PSAT	—	1
BPSATCV	Exponential coefficient for PSATCV	—	0
BPTWG	Exponential coefficient for PTWG	—	1e-07
BQMTCEN	Parameter for geometric dependence of Tcen on R/TFIN/HFIN	—	1.2e-08
BRDSW	exponential coefficient for RDSW	—	1e-07

Table 2.94: BSIM-CMG FINFET v110.0.0 Device Model Parameters

Parameter	Description	Units	Default
BRDW	Exponential coefficient for RDW	—	1e-07
BRSW	Exponential coefficient for RSW	—	1e-07
BSHEXP	Exponent to tune RTH dependence of NF	—	1
BUA	Exponential coefficient for UA	—	1e-07
BUAR	Reverse-mode exponential coefficient for UAR	—	0
BUD	Exponential coefficient for UD	—	5e-08
BUDR	Reverse-mode exponential coefficient for UD	—	0
BULKMOD	0: SOI multi-gate; 1: Bulk multi-gate; 2: for decoupled bulk multi-gate	—	0
BVD	Drain diode breakdown voltage	V	0
BVS	Source diode breakdown voltage	V	10
BVSAT	Exponential coefficient for VSAT	—	1e-07
BVSAT1	Exponential coefficient for VSAT1	—	0
BVSATCV	Exponential coefficient for VSATCV	—	0
CDSC	Coupling capacitance between S/D and channel	—	0.007
CDSCD	Drain-bias sensitivity of CDSC	—	0.007
CDSCDN1	NFIN dependence of CDSCD	—	0
CDSCDN2	NFIN dependence of CDSCD	—	100000
CDSCDR	Reverse-mode drain-bias sensitivity of CDSC	—	0
CDSCDRN1	NFIN dependence of CDSCD	—	0
CDSCDRN2	NFIN dependence of CDSCD	—	0
CDSCN1	NFIN dependence of CDSC	—	0
CDSCN2	NFIN dependence of CDSC	—	100000
CDSP	Constant drain-to-source fringe capacitance (all CGEOMOD)	F	0
CFD	Outer fringe capacitance at drain side	—	0
CFS	Outer fringe capacitance at source side	—	2.5e-11
CGBL	Bias dependent component of gate-to-substrate overlap capacitance per unit channel length per fin per finger	—	0
CGBN	Gate-to-substrate overlap capacitance per unit channel length per fin per finger	—	0
CGBO	Gate-to-substrate overlap capacitance per unit channel length per finger per NGCON	—	0
CGDL	Overlap capacitance between gate and lightly-doped drain region (for CGEOMOD = 0, 2)	—	0

Table 2.94: BSIM-CMG FINFET v110.0.0 Device Model Parameters

Parameter	Description	Units	Default
CGDO	Non LDD region drain-gate overlap capacitance per unit channel width	—	0
CGDP	Constant gate-to-drain fringe capacitance (CGEOMOD=1)	—	0
CGEO1SW	For CGEOMOD=1 only, this switch enables the parameters COVS, COVD, CGSP, and CGDP to be in F per fin, per gate-finger, per unit channel width	—	0
CGEOA	Fitting parameter for CGEOMOD=2	—	1
CGEOB	Fitting parameter for CGEOMOD=2	—	0
CGEOC	Fitting parameter for CGEOMOD=2	—	0
CGEOD	Fitting parameter for CGEOMOD=2	—	0
CGEOE	Fitting parameter for CGEOMOD=2	—	1
CGEOMOD	Geometry-dependent parasitic capacitance model selector	—	0
CGIDL	Parameter for body-effect of GIDL	—	0
CGISL	Parameter for body-effect of GISL	—	0.5
CGSL	Overlap capacitance between gate and lightly-doped source region (for CGEOMOD = 0, 2)	—	0
CGSO	Non LDD region source-gate overlap capacitance per unit channel width	—	0
CGSP	Constant gate-to-source fringe capacitance (CGEOMOD=1)	—	0
CHARGEWF	Average channel charge weighting factor, +1: source-side, 0: middle, -1: drain-side	—	0
CIGBACC	Parameter for Igb in accumulation	V^{-1}	0.075
CIGBINV	Parameter for Igb in inversion	V^{-1}	0.006
CIGC	Parameter for Igc in inversion	V^{-1}	0.075
CIGD	Parameter for Igd in inversion	V^{-1}	0
CIGS	Parameter for Igs in inversion	V^{-1}	0.075
CINS_UFCM	Insulator capacitance for the unified Model	—	1
CIT	Parameter for interface trap	—	0
CITR	Parameter for interface trap in reverse mode for asymmetric model	—	0
CJD	Unit area drain-side junction capacitance at zero bias	—	0
CJS	Unit area source-side junction capacitance at zero bias	—	0.0005

Table 2.94: BSIM-CMG FINFET v110.0.0 Device Model Parameters

Parameter	Description	Units	Default
CJSWD	Unit length drain-side sidewall junction capacitance at zero bias	—	0
CJSWGD	Unit length drain-side gate sidewall junction capacitance at zero bias	—	0
CJSWGS	Unit length source-side gate sidewall junction capacitance at zero bias	—	0
CJSWS	Unit length source-side sidewall junction capacitance at zero bias	—	5e-10
CKAPPAB	Bias dependent gate-to-substrate parasitic capacitance	—	0.6
CKAPPAD	Coefficient of bias-dependent overlap capacitance for the drain side (for CGEOMOD = 0, 2)	V	0
CKAPPAS	Coefficient of bias-dependent overlap capacitance for the source side (for CGEOMOD = 0, 2)	V	0.6
COVD	Constant gate-to-drain overlap capacitance (CGEOMOD=1)	—	0
COVS	Constant gate-to-source overlap capacitance (CGEOMOD=1)	—	0
CRATIO	Ratio of the corner area filled with silicon to the total corner area	—	0.5
CSDESW	Coefficient for source/drain-to-substrate sidewall capacitance	—	0
CTHO	Thermal capacitance	—	1e-05
D	Diameter of the cylinder (GEOMOD=3)	m	4e-08
DELTAPRSD	Change in silicon/silicide interface length due to non-rectangular epi	m	0
DELTAVSAT	velocity saturation parameter in the linear region	—	1
DELTAVSATCV	Velocity saturation parameter in the linear region for the capacitance model	—	0
DELTAW	Change of effective width due to shape of fin/cylinder	m	0
DELTAWCV	CV change of effective width due to shape of fin/cylinder	m	0
DELVFBACC	Change in flatband voltage: Vfb_accumulation - Vfb_inversion	V	0
DELVTRAND	Variability in Vth	V	0
DEVTYPE	0: PMOS; 1: NMOS	—	1
DLBIN	Delta L for binning	m	0

Table 2.94: BSIM-CMG FINFET v110.0.0 Device Model Parameters

Parameter	Description	Units	Default
DLC	Delta L for C-V model	m	0
DLCACC	Delta L for C-V model in accumulation region (BULKMOD=1 or 2)	m	0
DLCIGD	Delta L for Igd model	m	0
DLCIGS	Delta L for Igs model	m	0
DROUT	L dependence of DIBL effect on Rout	—	1.06
DSUB	DIBL exponent coefficient	—	1.06
DTEMP	Variability in device temperature	°C	0
DVT0	SCE coefficient	—	0
DVT1	SCE exponent coefficient. After binning it should be within (0:inf)	—	0.6
DVT1SS	Subthreshold swing exponent coefficient. After binning it should be within (0:inf)	—	0
DVTP0	Coefficient for drain-induced Vth shift (DITS)	—	0
DVTP1	DITS exponent coefficient	—	0
DVTP2	DITS model parameter	—	0
DVTSHIFT	Vth shift handle	V	0
DVTSHIFTR	Vth shift handle for asymmetric mode	—	0
EASUB	Electron affinity of substrate	—	4.05
EF	Flicker noise frequency exponent	—	1
EGIDL	Band bending parameter for GIDL	V	0
EGISL	Band bending parameter for GISL	V	0.2
EIGBINV	Parameter for Igb in inversion	V	1.1
EM	Flicker noise parameter	—	4.1e+07
EMOBT	Temperature coefficient of ETAMOB	—	0
EOT	Equivalent oxide thickness	m	1e-09
EOTACC	Equivalent oxide thickness for accumulation region	m	0
EOTBOX	Equivalent oxide thickness of the buried oxide (SOI FinFET)	m	1.4e-07
EPSROX	Relative dielectric constant of the gate dielectric	—	3.9
EPSRSP	Relative dielectric constant of the spacer	—	3.9
EPSRSUB	Relative dielectric constant of the channel material	—	11.9
ESATII	Saturation channel E-field for Iii	—	1e+07
ETA0	DIBL coefficient	—	0.6

Table 2.94: BSIM-CMG FINFET v110.0.0 Device Model Parameters

Parameter	Description	Units	Default
ETA0LT	Coupled NFIN and length dependence of ETA0	—	0
ETA0N1	NFIN dependence of ETA0	—	0
ETA0N2	NFIN dependence of ETA0	—	100000
ETA0R	Reverse-mode DIBL coefficient	—	0
ETAMOB	Effective field parameter	—	2
ETAQM	Bulk charge coefficient for Tcen	—	0.54
EU	Phonon/surface roughness scattering parameter	—	2.5
EUR	Reverse-mode phonon/surface roughness scattering parameter	—	0
FECH	End-channel factor for different orientation/shape	—	1
FECHCV	CV end-channel factor for different orientation/shape	—	1
FPITCH	Fin pitch	m	8e-08
GEOMOD	0: Double gate; 1: Triple gate; 2: Quadruple gate; 3: Cylindrical gate; 4: Unified fin Shape	—	0
GIDLMOD	0: Turn off GIDL/GISL current; 1: Turn on GIDL/GISL current	—	0
HEPI	Height of the raised source/drain on top of the fin	m	1e-08
HFIN	Fin height	m	3e-08
IDS0MULT	Variability in drain current for miscellaneous reasons	—	1
IGBMOD	0: Turn off Igb; 1: Turn on Igb	—	0
IGCLAMP	0: Disable gate current clamps; 1: Enable gate current clamps	—	1
IGCMOD	0: Turn off Igc, Igs and Igd; 1: Turn on Igc, Igs and Igd	—	0
IGT	Gate current temperature dependence	—	2.5
IIMOD	0: Turn off impact ionization current; 1: BSIM4-based model; 2: BSIMSOI-based model	—	0
IIMOD2CLAMP1	Clamp1 of SII1*Vg term in IIMOD=2 model	V	0.1
IIMOD2CLAMP2	Clamp2 of SII0*Vg term in IIMOD=2 model	V	0.1
IIMOD2CLAMP3	Clamp3 of Ratio term in IIMOD=2 model	V	0.1
IIT	Impact ionization temperature dependence for IIMOD = 1	—	-0.5
IJTHDFWD	Forward drain diode breakdown limiting current	A	0
IJTHDREV	Reverse drain diode breakdown limiting current	A	0
IJTHSFWD	Forward source diode breakdown limiting current	A	0.1

Table 2.94: BSIM-CMG FINFET v110.0.0 Device Model Parameters

Parameter	Description	Units	Default
IJTHSREV	Reverse source diode breakdown limiting current	A	0.1
IMIN	Parameter for Vgs clamping for inversion region calculation in accumulation	—	1e-15
JSD	Bottom drain junction reverse saturation current density	—	0
JSS	Bottom source junction reverse saturation current density	—	0.0001
JSWD	Unit length reverse saturation current for sidewall drain junction	—	0
JSWGD	Unit length reverse saturation current for gate-edge sidewall drain junction	—	0
JSWGS	Unit length reverse saturation current for gate-edge sidewall source junction	—	0
JSWS	Unit length reverse saturation current for sidewall source junction	—	0
JTSD	Bottom drain junction trap-assisted saturation current density	—	0
JTSS	Bottom source junction trap-assisted saturation current density	—	0
JTSSWD	Unit length trap-assisted saturation current for sidewall drain junction	—	0
JTSSWGD	Unit length trap-assisted saturation current for gate-edge sidewall drain junction	—	0
JTSSWGS	Unit length trap-assisted saturation current for gate-edge sidewall source junction	—	0
JTSSWS	Unit length trap-assisted saturation current for sidewall source junction	—	0
JTWEFF	Trap-assisted tunneling current width dependence	m	0
K0	Lateral NUD voltage parameter	V	0
K01	Temperature dependence of lateral NUD voltage parameter	V/K	0
K0SI	Correction factor for strong inversion used in Mnud. After binning it should be within (0:inf)	—	1
K0SI1	Temperature dependence of K0SI	—	0
K0SISAT	Correction factor for strong inversion used in Mnud	—	0
K0SISAT1	Temperature dependence of K0SISAT	—	0
K1	Body effect coefficient for subthreshold region	—	1e-06
K11	Temperature dependence of K1	—	0

Table 2.94: BSIM-CMG FINFET v110.0.0 Device Model Parameters

Parameter	Description	Units	Default
K1RSCE	K1 for reverse short channel effect calculation	—	0
K2	Body effect coefficient for BULKMOD==2	—	0
K21	Temperature dependence of K2	—	0
K2SAT	Correction factor for K2 in saturation (high Vds)	—	0
K2SAT1	Temperature dependence of K2SAT	—	0
K2SI	Correction factor for strong inversion used in Mob	—	0
K2SI1	Temperature dependence of K2SI	—	0
K2SISAT	Correction factor for strong inversion used in Mob	—	0
K2SISAT1	Temperature dependence of K2SISAT	—	0
KSATIV	Parameter for long channel Vdsat	—	1
KSATIVR	KSATIV in asymmetric mode	—	0
KT1	Vth temperature coefficient	V	0
KT1L	Vth temperature L coefficient	—	0
L	Designed gate length	m	3e-08
LA1		—	0
LA11		—	0
LA2		—	0
LA21		—	0
LAGIDL		—	0
LAGISL		—	0
LAIGBACC		—	0
LAIGBACC1		—	0
LAIGBINV		—	0
LAIGBINV1		—	0
LAIGC		—	0
LAIGC1		—	0
LAIGD		—	0
LAIGD1		—	0
LAIGEN		—	0
LAIGS		—	0
LAIGS1		—	0
LALPHA0		—	0
LALPHA1		m/V	0
LALPHAII0		—	0

Table 2.94: BSIM-CMG FINFET v110.0.0 Device Model Parameters

Parameter	Description	Units	Default
LALPHAII1		m/V	0
LAT		—	0
LATCV		—	0
LATR		—	0
LBETA0		m/V	0
LBETAII0		m/V	0
LBETAII1		—	0
LBETAII2		—	0
LBGIDL		V	0
LBGISL		V	0
LBIGBACC		—	0
LBIGBINV		—	0
LBIGC		—	0
LBIGD		—	0
LBIGEN		—	0
LBIGS		—	0
LCDSC		—	0
LCDSCD		—	0
LCDSCDR		—	0
LCFD		F	0
LCFS		F	0
LCGBL		F	0
LCGDL		F	0
LCGIDL		—	0
LCGISL		—	0
LCGSL		F	0
LCIGBACC		m/V	0
LCIGBINV		m/V	0
LCIGC		m/V	0
LCIGD		m/V	0
LCIGS		m/V	0
LCIT		—	0
LCITR		—	0
LCKAPPAB		—	0

Table 2.94: BSIM-CMG FINFET v110.0.0 Device Model Parameters

Parameter	Description	Units	Default
LCKAPPAD		—	0
LCKAPPAS		—	0
LCOVD		F	0
LCOVS		F	0
LDELTAVSAT		—	0
LDELTAVSATCV		—	0
LDROUT		—	0
LDSUB		—	0
LDVT0		—	0
LDVT1		—	0
LDVT1SS		—	0
LDVTB		—	0
LDVTSHIFT		—	0
LDVTSHIFTR		—	0
LEGIDL		—	0
LEGISL		—	0
LEIGBINV		—	0
LEMOBT		—	0
LESATII		V	0
LETA0		—	0
LETA0R		—	0
LETAMOB		—	0
LEU		—	0
LEUR		—	0
LIGT		—	0
LII	Channel length dependence parameter of Iii	—	5e-10
LIIT		—	0
LINT	Length reduction parameter (dopant diffusion effect)	m	0
LINTIGEN	Lint for thermal generation current	m	0
LINTNOI	L offset for flicker noise calculation	m^2	0
LK0		—	0
LK01		—	0
LK0SI		—	0

Table 2.94: BSIM-CMG FINFET v110.0.0 Device Model Parameters

Parameter	Description	Units	Default
LK0SI1		—	0
LK0SISAT		—	0
LK0SISAT1		—	0
LK1		—	0
LK11		—	0
LK1RSCE		—	0
LK2		—	0
LK21		—	0
LK2SAT		—	0
LK2SAT1		—	0
LK2SI		—	0
LK2SI1		—	0
LK2SISAT		—	0
LK2SISAT1		—	0
LKSATIV		—	0
LKSATIVR		—	0
LKT1		—	0
LL	Length reduction parameter (dopant diffusion effect)	—	0
LLC	Length reduction parameter (dopant diffusion effect)	—	0
LLII		—	0
LLN	Length reduction parameter (dopant diffusion effect)	—	1
LLPE0		m^2	0
LLPEB		—	0
LMEXP		—	0
LMEXPR		—	0
LNBODY		—	0
LNGATE		—	0
LNIGBACC		—	0
LNIGBINV		—	0
LNTGEN		—	0
LNTOX		—	0
LPA	Mobility L power coefficient	—	1

Table 2.94: BSIM-CMG FINFET v110.0.0 Device Model Parameters

Parameter	Description	Units	Default
LPAR	Reverse-mode mobility L power coefficient	—	0
LPCLM		—	0
LPCLMCV		—	0
LPCLMG		—	0
LPCLMR		—	0
LPDIBL1		—	0
LPDIBL1R		—	0
LPDIBL2		—	0
LPDIBL2R		—	0
LPE0	Equivalent length of pocket region at zero bias	m	5e-09
LPGIDL		—	0
LPGISL		—	0
LPHIBE		—	0
LPHIG		—	0
LPHIN		—	0
LPIGCD		—	0
LPOXEDGE		—	0
LPRT		—	0
LPRWGD		m/V	0
LPRWGS		m/V	0
LPSAT		—	0
LPSATCV		—	0
LPTWG		—	0
LPTWGR		—	0
LPTWGT		—	0
LPVAG		—	0
LQMFACTOR		—	0
LQMTCENCV		—	0
LQMTCENCVA		—	0
LRDSW		—	0
LRDW		—	0
LRSD	Length of the source/drain	m	0
LRSW		—	0
LSII0		m/V	0

Table 2.94: BSIM-CMG FINFET v110.0.0 Device Model Parameters

Parameter	Description	Units	Default
LSII1		—	0
LSII2		—	0
LSIID		—	0
LSP	Thickness of the gate sidewall spacer	m	0
LSTTHETASAT		—	0
LTGIDL		—	0
LTII		—	0
LTSS		—	0
LU0		—	0
LU0R		—	0
LUA		—	0
LUA1		—	0
LUA1R		—	0
LUAR		—	0
LUC		—	0
LUC1		—	0
LUC1R		—	0
LUCR		—	0
LUCS		—	0
LUCSTE		—	0
LUD		—	0
LUD1		—	0
LUD1R		—	0
LUDR		—	0
LUP		—	0
LUPR		—	0
LUTE		—	0
LUTER		—	0
LUTL		—	0
LUTLR		—	0
LVSAT		—	0
LVSAT1		—	0
LVSAT1R		—	0
LVSATCV		—	0

Table 2.94: BSIM-CMG FINFET v110.0.0 Device Model Parameters

Parameter	Description	Units	Default
LVSATR		—	0
LWR		—	0
LXRCRG1		—	0
LXRCRG2		—	0
MEXP	Smoothing function factor for Vdsat	—	4
MEXPR	Reverse-mode smoothing function factor for Vdsat	—	0
MJD	Drain bottom junction capacitance grading coefficient	—	0
MJD2	Drain bottom two-step second junction capacitance grading coefficient	—	0
MJS	Source bottom junction capacitance grading coefficient	—	0.5
MJS2	Source bottom two-step second junction capacitance grading coefficient	—	0.125
MJSWD	Drain sidewall junction capacitance grading coefficient	—	0
MJSWD2	Drain sidewall two-step second junction capacitance grading coefficient	—	0
MJSWGD	Drain-side gate sidewall junction capacitance grading coefficient	—	0
MJSWGD2	Drain-side gate sidewall two-step second junction capacitance grading coefficient	—	0
MJSWGS	Source-side gate sidewall junction capacitance grading coefficient	—	0
MJSWGS2	Source-side gate sidewall two-step second junction capacitance grading coefficient	—	0
MJSWS	Source sidewall junction capacitance grading coefficient	—	0.33
MJSWS2	Source sidewall two-step second junction capacitance grading coefficient	—	0.083
NA1		—	0
NA11		—	0
NA2		—	0
NA21		—	0
NAGIDL		—	0
NAGISL		—	0
NAIGBACC		—	0

Table 2.94: BSIM-CMG FINFET v110.0.0 Device Model Parameters

Parameter	Description	Units	Default
NAIGBACC1		—	0
NAIGBINV		—	0
NAIGBINV1		—	0
NAIGC		—	0
NAIGC1		—	0
NAIGD		—	0
NAIGD1		—	0
NAIGEN		—	0
NAIGS		—	0
NAIGS1		—	0
NALPHA0		—	0
NALPHA1		m/V	0
NALPHAII0		—	0
NALPHAII1		m/V	0
NAT		—	0
NATCV		—	0
NATR		—	0
NBETA0		m/V	0
NBETAII0		m/V	0
NBETAII1		—	0
NBETAII2		—	0
NBGIDL		V	0
NBGISL		V	0
NBIGBACC		—	0
NBIGBINV		—	0
NBIGC		—	0
NBIGD		—	0
NBIGEN		—	0
NBIGS		—	0
NBODY	Channel (body) doping	—	1e+22
NBODYN1	NFIN dependence of channel (body) doping	—	0
NBODYN2	NFIN dependence of channel (body) doping	—	100000
NC0SUB	Conduction band density of states	—	2.86e+25
NCDSC		—	0

Table 2.94: BSIM-CMG FINFET v110.0.0 Device Model Parameters

Parameter	Description	Units	Default
NCDSCD		—	0
NCDSCDR		—	0
NCFD		F	0
NCFS		F	0
NCGBL		F	0
NCGDL		F	0
NCGIDL		—	0
NCGISL		—	0
NCGSL		F	0
NCIGBACC		m/V	0
NCIGBINV		m/V	0
NCIGC		m/V	0
NCIGD		m/V	0
NCIGS		m/V	0
NCIT		—	0
NCITR		—	0
NCKAPPAB		—	0
NCKAPPAD		—	0
NCKAPPAS		—	0
NCOVD		F	0
NCOVS		F	0
NDELTAVSAT		—	0
NDELTAVSATCV		—	0
NDROUT		—	0
NDSUB		—	0
NDVT0		—	0
NDVT1		—	0
NDVT1SS		—	0
NDVTB		—	0
NDVTSHIFT		—	0
NDVTSHIFTR		—	0
NEGIDL		—	0
NEGISL		—	0
NEIGBINV		—	0

Table 2.94: BSIM-CMG FINFET v110.0.0 Device Model Parameters

Parameter	Description	Units	Default
NEMOBT		—	0
NESATII		V	0
NETA0		—	0
NETAOR		—	0
NETAMOB		—	0
NEU		—	0
NEUR		—	0
NF	Number of fingers	—	1
NFIN	Number of fins per finger (real number enables optimization)	—	1
NGATE	Parameter for poly gate doping. For metal gate please set NGATE = 0	—	0
NGCON	Number of gate contact (1 or 2 sided)	—	1
NIOSUB	Intrinsic carrier constant at 300.15K	—	1.1e+16
NIGBACC	Parameter for Igb in accumulation	—	1
NIGBINV	Parameter for Igb in inversion	—	3
NIGT		—	0
NIIT		—	0
NJD	Drain junction emission coefficient	—	0
NJS	Source junction emission coefficient	—	1
NJTS	Non-ideality factor for JTSS	—	20
NJTSD	Non-ideality factor for JTSD	—	0
NJTSSW	Non-ideality factor for JTSSWS	—	20
NJTSSWD	Non-ideality factor for JTSSWD	—	0
NJTSSWG	Non-ideality factor for JTSSWGS	—	20
NJTSSWGD	Non-ideality factor for JTSSWGD	—	0
NK0		—	0
NK01		—	0
NK0SI		—	0
NK0SI1		—	0
NK0SISAT		—	0
NK0SISAT1		—	0
NK1		—	0
NK11		—	0
NK1RSCE		—	0

Table 2.94: BSIM-CMG FINFET v110.0.0 Device Model Parameters

Parameter	Description	Units	Default
NK2		—	0
NK21		—	0
NK2SAT		—	0
NK2SAT1		—	0
NK2SI		—	0
NK2SI1		—	0
NK2SISAT		—	0
NK2SISAT1		—	0
NKSATIV		—	0
NKSATIVR		—	0
NKT1		—	0
NLII		—	0
NLPE0		m^2	0
NLPEB		—	0
NMEXP		—	0
NMEXPR		—	0
NNBODY		—	0
NNGATE		—	0
NNIGBACC		—	0
NNIGBINV		—	0
NNTGEN		—	0
NNTOX		—	0
NOIA	Flicker noise parameter	—	6.25e+39
NOIB	Flicker noise parameter	—	3.125e+24
NOIC	Flicker noise parameter	—	8.75e+07
NPCLM		—	0
NPCLMCV		—	0
NPCLMG		—	0
NPCLMR		—	0
NPDIBL1		—	0
NPDIBL1R		—	0
NPDIBL2		—	0
NPDIBL2R		—	0
NPGIDL		—	0

Table 2.94: BSIM-CMG FINFET v110.0.0 Device Model Parameters

Parameter	Description	Units	Default
NPGISL		—	0
NPHIBE		—	0
NPHIG		—	0
NPHIN		—	0
NPIGCD		—	0
NPOXEDGE		—	0
NPRT		—	0
NPRWGD		m/V	0
NPRWGS		m/V	0
NPSAT		—	0
NPSATCV		—	0
NPTWG		—	0
NPTWGR		—	0
NPTWGT		—	0
NPVAG		—	0
NQMFACTOR		—	0
NQMTCENCV		—	0
NQMTCENCVA		—	0
NQSMOD	0: Turn off NQS model; 1: NQS gate resistance (with gi node); 2: NQS charge deficit model from BSIM4 (with q node)	—	0
NRD	Number of source diffusion squares	—	0
NRDSW		—	0
NRDW		—	0
NRS	Number of source diffusion squares	—	0
NRSW		—	0
NSD	Source/drain active doping concentration	—	2e+26
NSDE	Source/drain active doping concentration at Leff edge	—	2e+25
NSEG	Number of segments for NQSMOD=3 (3, 5 and 10 supported)	—	4
NSII0		m/V	0
NSII1		—	0
NSII2		—	0
NSIID		—	0

Table 2.94: BSIM-CMG FINFET v110.0.0 Device Model Parameters

Parameter	Description	Units	Default
NSTTHETASAT		—	0
NTGEN	Thermal generation current parameter	—	1
NTGIDL		—	0
NTII		—	0
NTNOI	Thermal noise parameter	—	1
NTOX	Exponent for Tox ratio	—	1
NTSS		—	0
NUO		—	0
NUOR		—	0
NUA		—	0
NUA1		—	0
NUA1R		—	0
NUAR		—	0
NUC		—	0
NUC1		—	0
NUC1R		—	0
NUCR		—	0
NUCS		—	0
NUCSTE		—	0
NUD		—	0
NUD1		—	0
NUD1R		—	0
NUDR		—	0
NUP		—	0
NUPR		—	0
NUTE		—	0
NUTER		—	0
NUTL		—	0
NUTLR		—	0
NVSAT		—	0
NVSAT1		—	0
NVSAT1R		—	0
NVSATCV		—	0
NVSATR		—	0

Table 2.94: BSIM-CMG FINFET v110.0.0 Device Model Parameters

Parameter	Description	Units	Default
NVTM	Subthreshold swing factor multiplied by Vtm. If defined by user, it will overwrite nVtm in the code	V	0
NWR		—	0
NXRCRG1		—	0
NXRCRG2		—	0
PA1		—	0
PA11		—	0
PA2		—	0
PA21		—	0
PAGIDL		—	0
PAGISL		—	0
PAIGBACC		—	0
PAIGBACC1		—	0
PAIGBINV		—	0
PAIGBINV1		—	0
PAIGC		—	0
PAIGC1		—	0
PAIGD		—	0
PAIGD1		—	0
PAIGEN		—	0
PAIGS		—	0
PAIGS1		—	0
PALPHA0		—	0
PALPHA1		—	0
PALPHAII0		—	0
PALPHAII1		—	0
PAT		—	0
PATCV		—	0
PATR		—	0
PBD	Drain-side bulk junction built-in potential	V	0
PBETA0		—	0
PBETAII0		—	0
PBETAII1		—	0
PBETAII2		—	0

Table 2.94: BSIM-CMG FINFET v110.0.0 Device Model Parameters

Parameter	Description	Units	Default
PBGIDL		—	0
PBGISL		—	0
PBIGBACC		—	0
PBIGBINV		—	0
PBIGC		—	0
PBIGD		—	0
PBIGEN		—	0
PBIGS		—	0
PBS	Source-side bulk junction built-in potential	V	1
PBSWD	Built-in potential for Drain-side sidewall junction capacitance	V	0
PBSWGD	Built-in potential for Drain-side gate sidewall junction capacitance	V	0
PBSWGS	Built-in potential for Source-side gate sidewall junction capacitance	V	0
PBSWS	Built-in potential for Source-side sidewall junction capacitance	V	1
PCDSC		F	0
PCDSCD		F	0
PCDSCDR		F	0
PCFD		—	0
PCFS		—	0
PCGBL		—	0
PCGDL		—	0
PCGIDL		—	0
PCGISL		—	0
PCGSL		—	0
PCIGBACC		—	0
PCIGBINV		—	0
PCIGC		—	0
PCIGD		—	0
PCIGS		—	0
PCIT		F	0
PCITR		—	0
PCKAPPAB		—	0

Table 2.94: BSIM-CMG FINFET v110.0.0 Device Model Parameters

Parameter	Description	Units	Default
PCKAPPAD		—	0
PCKAPPAS		—	0
PCLM	Channel length modulation (CLM) parameter	—	0.013
PCLMCV	CLM parameter for short-channel CV	—	0
PCLMG	Gate bias dependence parameter for CLM	—	0
PCLMR	Reverse model PCLM parameter	—	0
PCOVD		—	0
PCOVS		—	0
PDEJ	Drain-to-substrate PN junction perimeter (BULKMOD=1 or 2)	m	0
PDELTAVSAT		—	0
PDELTAVSATCV		—	0
PDEO	Perimeter of drain-to-substrate overlap region through oxide	m	0
PDIBL1	DIBL output conductance parameter - forward mode	—	1.3
PDIBL1R	DIBL output conductance parameter - reverse mode	—	0
PDIBL2	DIBL output conductance parameter	—	0.0002
PDIBL2R	DIBL output conductance parameter - reverse mode	—	0
PDROUT		—	0
PDSUB		—	0
PDVT0		—	0
PDVT1		—	0
PDVT1SS		—	0
PDVTB		—	0
PDVTSHIFT		—	0
PDVTSHIFTR		—	0
PEGIDL		—	0
PEGISL		—	0
PEIGBINV		—	0
PEMOBT		—	0
PESATII		—	0
PETA0		—	0
PETA0R		—	0

Table 2.94: BSIM-CMG FINFET v110.0.0 Device Model Parameters

Parameter	Description	Units	Default
PETAMOB		—	0
PEU		—	0
PEUR		—	0
PGIDL	Parameter for body-bias effect on GIDL	—	0
PGISL	Parameter for body-bias effect on GISL	—	1
PHIBE	Body effect voltage parameter. After binning it should be within [0.2:1.2]	V	0.7
PHIG	Gate workfunction	—	4.61
PHIGL	Length dependence of gate workfunction	—	0
PHIGLT	Coupled NFIN and length dependence of gate workfunction	—	0
PHIGN1	NFIN dependence of gate workfunction	—	0
PHIGN2	NFIN dependence of gate workfunction	—	100000
PHIN	Nonuniform vertical doping effect on surface potential	V	0.05
PIGCD	Parameter for Igc partition	—	1
PIGT		—	0
PIIT		—	0
PK0		—	0
PK01		—	0
PK0SI		—	0
PK0SI1		—	0
PK0SISAT		—	0
PK0SISAT1		—	0
PK1		—	0
PK11		—	0
PK1RSCE		—	0
PK2		—	0
PK21		—	0
PK2SAT		—	0
PK2SAT1		—	0
PK2SI		—	0
PK2SI1		—	0
PK2SISAT		—	0
PK2SISAT1		—	0

Table 2.94: BSIM-CMG FINFET v110.0.0 Device Model Parameters

Parameter	Description	Units	Default
PKSATIV		—	0
PKSATIVR		—	0
PKT1		—	0
PLII		—	0
PLPE0		—	0
PLPEB		—	0
PMEXP		—	0
PMEXPR		—	0
PNBODY		—	0
PNGATE		—	0
PNIGBACC		—	0
PNIGBINV		—	0
PNTGEN		—	0
PNTOX		—	0
POXEDGE	Factor for the gate edge Tox	—	1
PPCLM		—	0
PPCLMCV		—	0
PPCLMG		—	0
PPCLMR		—	0
PPDIBL1		—	0
PPDIBL1R		—	0
PPDIBL2		—	0
PPDIBL2R		—	0
PPGIDL		—	0
PPGISL		—	0
PPHIBE		—	0
PPHIG		—	0
PPHIN		—	0
PPIGCD		—	0
PPOXEDGE		—	0
PPRT		—	0
PPRWGD		—	0
PPRWGS		—	0
PPSAT		—	0

Table 2.94: BSIM-CMG FINFET v110.0.0 Device Model Parameters

Parameter	Description	Units	Default
PPSATCV		—	0
PPTWG		—	0
PPTWGR		—	0
PPTWGT		—	0
PPVAG		—	0
PQM	Slope of normalized Tcen in inversion	—	0.66
PQMACC	Slope of normalized Tcen in accumulation	—	0.66
PQMFACTOR		—	0
PQMTCENCV		—	0
PQMTCENCVA		—	0
PRDDR	Drain-side quasi-saturation parameter	—	0
PRDSW		—	0
PRDW		—	0
PRSDEND	Extra silicon/silicide interface perimeter at the two ends of the FinFET	m	0
PRSDR	Source-side quasi-saturation parameter	—	1
PRSW		—	0
PRT	Series resistance temperature coefficient	—	0.001
PRWGD	Gate bias dependence of drain extension resistance	V^{-1}	0
PRWGS	Gate bias dependence of source extension resistance	V^{-1}	0
PSAT	Velocity saturation exponent, after binnig should be from [2.0:inf)	—	2
PSATCV	Velocity saturation exponent for C-V	—	0
PSEJ	Source-to-substrate PN junction perimeter (BULKMOD=1 or 2)	m	0
PSEO	Perimeter of source-to-substrate overlap region through oxide	m	0
PSII0		—	0
PSII1		—	0
PSII2		—	0
PSIID		—	0
PSTTHETASAT		—	0
PTGIDL		—	0
PTII		—	0

Table 2.94: BSIM-CMG FINFET v110.0.0 Device Model Parameters

Parameter	Description	Units	Default
PTSS		—	0
PTWG	Gmsat degradation parameter - forward mode	—	0
PTWGR	Gmsat degradation parameter - reverse mode	—	0
PTWGT	PTWG temperature coefficient	—	0.004
PU0		—	0
PU0R		—	0
PUA		—	0
PUA1		—	0
PUA1R		—	0
PUAR		—	0
PUC		—	0
PUC1		—	0
PUC1R		—	0
PUCR		—	0
PUCS		—	0
PUCSTE		—	0
PUD		—	0
PUD1		—	0
PUD1R		—	0
PUDR		—	0
PUP		—	0
PUPR		—	0
PUTE		—	0
PUTER		—	0
PUTL		—	0
PUTLR		—	0
PVAG	Vgs dependence on early voltage	—	1
PVSAT		—	0
PVSAT1		—	0
PVSAT1R		—	0
PVSATCV		—	0
PVSATR		—	0
PWR		—	0
PXRCRG1		—	0

Table 2.94: BSIM-CMG FINFET v110.0.0 Device Model Parameters

Parameter	Description	Units	Default
PXRCRG2		—	0
QM0	Knee-point for Tcen in inversion (Charge normalized to Cox)	V	0.001
QM0ACC	Knee-point for Tcen in accumulation (Charge normalized to Cox)	V	0.001
QMFACTOR	Prefactor + switch for QM Vth correction	—	0
QMFACTORCV	Charge dependence taking QM effects into account	—	0
QMTCENCV	Prefactor + switch for QM Width and Toxeff correction for CV	—	0
QMTCENCVA	Prefactor + switch for QM Width and Toxeff correction for CV (accumulation region)	—	0
RDDR	Drain-side drift resistance parameter - forward mode	—	0
RDDRR	Drain-side drift resistance parameter - reverse mode	—	0
RDSMOD	0: Internal S/D resistance model; 1: External S/D resistance model; 2: Both bias dependent and independent part of S/D resistance internal	—	0
RDSW	RDSMOD = 0 zero bias S/D extension resistance per unit width	—	100
RDSWMIN	RDSMOD = 0 S/D extension resistance per unit width at high Vgs	—	0
RDW	RDSMOD = 1 zero bias drain extension resistance per unit width	—	50
RDWMIN	RDSMOD = 1 drain extension resistance per unit width at high Vgs	—	0
RGATEMOD	0: Turn off gate electrode resistance (without ge node); 1: Turn on gate electrode resistance (with ge node)	—	0
RGEOA	Fitting parameter for RGEOMOD=1	—	1
RGEOB	Fitting parameter for RGEOMOD=1	—	0
RGEOC	Fitting parameter for RGEOMOD=1	—	0
RGEOD	Fitting parameter for RGEOMOD=1	—	0
RGEOE	Fitting parameter for RGEOMOD=1	—	0
RGEOMOD	Geometry-dependent source/drain resistance; 0: RSH-based; 1: Holistic	—	0
RGEXT	Effective gate electrode external resistance	—	0
RGFIN	Effective gate electrode per finger per fin resistance	—	0.001

Table 2.94: BSIM-CMG FINFET v110.0.0 Device Model Parameters

Parameter	Description	Units	Default
RHOC	Contact resistivity at the silicon/silicide interface	—	1e-12
RHORSD	Average resistivity of silicon in the raised source/drain region	—	1
RNOIA	Thermal noise coefficient	—	0.577
RNOIB	Thermal noise coefficient	—	0.37
RNOIC	Thermal noise coefficient for TNOIMOD=1	—	0.395
RSDR	Source-side drift resistance parameter - forward mode	—	0
RSDRR	Source-side drift resistance parameter - reverse mode	—	0
RSHD	Drain-side sheet resistance	—	0
RSHS	Source-side sheet resistance	—	0
RSW	RDSMOD = 1 zero bias source extension resistance per unit width	—	50
RSWMIN	RDSMOD = 1 source extension resistance per unit width at high Vgs	—	0
RTH0	Thermal resistance	—	0.01
SCALEN	Noise scaling parameter for TNOIMOD=1	—	100000
SDTERM	Indicator of whether the source/drain are terminated with silicide	—	0
SH_WARN	0: Disable self-heating warnings; 1: Enable self-heating warnings	—	0
SHMOD	0: Turn off self-heating; 1: Turn on self-heating	—	0
SII0	Vgs dependence parameter of Iii	V^{-1}	0.5
SII1	1st Vgs dependence parameter of Iii	—	0.1
SII2	2nd Vgs dependence parameter of Iii	V	0
SIID	3rd Vds dependence parameter of Iii	V	0
SJD	Constant for drain-side two-step second junction	—	0
SJS	Constant for source-side two-step second junction	—	0
SJSWD	Constant for drain-side sidewall two-step second junction	—	0
SJSWGD	Constant for source-side gate sidewall two-step second junction	—	0
SJSWGS	Constant for source-side gate sidewall two-step second junction	—	0
SJSWS	Constant for source-side sidewall two-step second junction	—	0

Table 2.94: BSIM-CMG FINFET v110.0.0 Device Model Parameters

Parameter	Description	Units	Default
TBGASUB	Bandgap temperature coefficient	—	0.000702
TBGBSUB	Bandgap temperature coefficient	K	1108
TCJ	Temperature coefficient for CJS/CJD	—	0
TCJSW	Temperature coefficient for CJSWS/CJSWD	—	0
TCJSWG	Temperature coefficient for CJSWGS/CJSWGD	—	0
TEMPMOD	1: Change temperature dependence of specific parameters	—	0
TETA0	Temperature dependence of DIBL coefficient	—	0
TETA0R	Temperature dependence of reverse-mode DIBL coefficient	—	0
TFIN	Body (fin) thickness	m	1.5e-08
TFIN_BASE	Base body (fin) thickness for trapezoidal triple gate	m	1.5e-08
TFIN_TOP	Top body (fin) thickness for trapezoidal triple gate	m	1.5e-08
TGATE	Gate height on top of the hard mask	m	3e-08
TGIDL	GIDL/GISL temperature dependence	—	-0.003
THETADIBL	DIBL length dependence. If defined by user, will overwrite Theta_DIBL in the code	—	0
THETASCE	Vth roll-off length dependence. If defined by user, it will overwrite Theta_SCE in the code	—	0
THETASW	Subthreshold swing length dependence. If defined by user, it will overwrite Theta_SW in the code	—	0
TII	Impact ionization temperature dependence for IIMOD = 2	—	0
TMASK	Height of hard mask on top of the fin	m	3e-08
TMEXP	Temperature coefficient for Vdseff smoothing	—	0
TMEXPR	Reverse-mode temperature coefficient for Vdseff smoothing	—	0
TNJTS	Temperature coefficient for NJTS	—	0
TNJTSD	Temperature coefficient for NJTSD	—	0
TNJTSSW	Temperature coefficient for NJTSSW	—	0
TNJTSSWD	Temperature coefficient for NJTSSWD	—	0
TNJTSSWG	Temperature coefficient for NJTSSWG	—	0
TNJTSSWGD	Temperature coefficient for NJTSSWGD	—	0
TNOIA	Thermal noise parameter	—	1.5
TNOIB	Thermal noise parameter	—	3.5

Table 2.94: BSIM-CMG FINFET v110.0.0 Device Model Parameters

Parameter	Description	Units	Default
TNOIC	Thermal noise parameter for TNOIMOD=1	—	3.5
TNOIMOD	0: Charge-based, 1: Correlated thermal noise model	—	0
TNOM	Temperature at which the model is extracted	—	27
TOXG	Oxide thickness for gate current model	m	0
TOXP	Physical oxide thickness	m	1.2e-09
TOXREF	Target tox value	m	1.2e-09
TPB	Temperature coefficient for PBS/PBD	—	0
TPBSW	Temperature coefficient for PBSWS/PBSWD	—	0
TPBSWG	Temperature coefficient for PBSWGS/PBSWGD	—	0
TRDDR	Drain-side drift resistance temperature coefficient	—	0
TRSDR	Source-side drift resistance temperature coefficient	—	0
TSILI	Thickness of the silicide on top of the raised source/drain	m	1e-08
TSS	Swing temperature coefficient	—	0
TYPE	0: PMOS; 1: NMOS	—	0
U0	Low-field mobility	—	0.03
U0LT	Coupled NFIN and length dependence of U0	—	0
U0MULT	Variability in carrier mobility	—	1
U0N1	NFIN dependence of U0	—	0
U0N1R	Reverse-mode NFIN dependence of U0	—	0
U0N2	NFIN dependence of U0	—	100000
U0N2R	Reverse-mode NFIN dependence of U0	—	0
U0R	Reverse-mode low-field mobility	—	0
UA	Phonon/surface roughness scattering parameter	—	0.3
UA1	Mobility temperature coefficient for UA	—	0.001032
UA1R	Reverse-mode mobility temperature coefficient for UA	—	0
UAR	Reverse-mode phonon/surface roughness scattering parameter	—	0
UC	Body effect for mobility degradation parameter - BULKMOD=1 or 2	—	0
UC1	Mobility temperature coefficient for UC	—	5.6e-11
UC1R	Reverse-mode mobility temperature coefficient for UC	—	0

Table 2.94: BSIM-CMG FINFET v110.0.0 Device Model Parameters

Parameter	Description	Units	Default
UCR	Reverse-mode body effect for mobility degradation parameter - BULKMOD=1 or 2	—	0
UCS	Columbic scattering parameter	—	1
UCSTE	Mobility temperature coefficient	—	-0.004775
UD	Columbic scattering parameter	—	0
UD1	Mobility temperature coefficient for UC	—	0
UD1R	Reverse-mode mobility temperature coefficient for UD	—	0
UDR	Reverse-mode columbic scattering parameter	—	0
UP	Mobility L coefficient	—	0
UPR	Reverse-mode mobility L coefficient	—	0
UTE	Mobility temperature coefficient	—	0
UTER	Reverse-mode for mobility temperature coefficient	—	0
UTL	Mobility temperature coefficient	—	-0.0015
UTLR	Reverse-mode for mobility temperature coefficient	—	0
VFBSD	Flatband voltage for S/D region	V	0
VFBSDCV	Flatband voltage for S/D region for C-V calculations	V	0
VSAT	Saturation velocity for the saturation region	—	85000
VSAT1	Velocity saturation parameter for Ion degradation - forward mode	—	0
VSAT1N1	NFIN dependence of VSAT1	—	0
VSAT1N2	NFIN dependence of VSAT1	—	0
VSAT1R	Velocity saturation parameter for Ion degradation - reverse mode	—	0
VSAT1RN1	NFIN dependence of VSAT1R	—	0
VSAT1RN2	NFIN dependence of VSAT1R	—	0
VSATCV	Velocity saturation parameter for CV	—	0
VSATN1	NFIN dependence of VSAT	—	0
VSATN2	NFIN dependence of VSAT	—	100000
VSATR	Saturation velocity for the saturation region in the reverse mode	—	0
VSATRN1	NFIN dependence of VSATR	—	0
VSATRN2	NFIN dependence of VSATR	—	0

Table 2.94: BSIM-CMG FINFET v110.0.0 Device Model Parameters

Parameter	Description	Units	Default
VTSD	Bottom drain junction trap-assisted current voltage dependent parameter	V	0
VTSS	Bottom source junction trap-assisted current voltage dependent parameter	V	10
VTSSWD	Unit length trap-assisted current voltage dependent parameter for sidewall drain junction	V	0
VTSSWGD	Unit length trap-assisted current voltage dependent parameter for gate-edge sidewall drain junction	V	0
VTSSWGS	Unit length trap-assisted current voltage dependent parameter for gate-edge sidewall source junction	V	10
VTSSWS	Unit length trap-assisted current voltage dependent parameter for sidewall source junction	V	10
W_UFCM	Effective channel width for the unified Model	m	1
WR	W dependence parameter of S/D extension resistance	—	1
WTH0	Width dependence coefficient for Rth and Cth	m	0
XJBVD	Fitting parameter for drain diode breakdown current	—	0
XJBVS	Fitting parameter for source diode breakdown current	—	1
XL	L offset for channel length due to mask/etch effect	m	0
XRCRG1	Parameter for non-quasistatic gate resistance (NQSMOD = 1) and NQSMOD = 2	—	12
XRCRG2	Parameter for non-quasistatic gate resistance (NQSMOD = 1) and NQSMOD = 2	—	1
XTID	Drain junction current temperature exponent	—	0
XTIS	Source junction current temperature exponent	—	3
XTSD	Power dependence of JTSD on temperature	—	0
XTSS	Power dependence of JTSS on temperature	—	0.02
XTSSWD	Power dependence of JTSSWD on temperature	—	0
XTSSWGD	Power dependence of JTSSWGD on temperature	—	0
XTSSWGS	Power dependence of JTSSWGS on temperature	—	0.02
XTSSWS	Power dependence of JTSSWS on temperature	—	0.02

Level 107 MOSFET Tables (BSIM CMG version 107.0.0)

Xyce includes the BSIM CMG Common Multi-gate model version 107. This model has been superceded by the level 110 version, but has been retained for backward compatibility with previous versions of Xyce and older model cards. The code in **Xyce** was generated from the BSIM group's Verilog-A input using the default "ifdef" lines provided, and therefore supports only the subset of BSIM CMG features those defaults enable. Instance and model parameters for the BSIM CMG model are given in tables 2.95 and 2.96. Details of the model are documented in the BSIM-CMG technical report[26], available from the BSIM web site at `http://bsim.berkeley.edu/models/bsimcmg/`.

Table 2.95: BSIM-CMG FINFET v107.0.0 Device Instance Parameters

Parameter	Description	Units	Default
ADEJ	Drain junction area (BULKMOD=1)	–	0
ADEO	Drain to substrate overlap area through oxide	–	0
ASEJ	Source junction area (BULKMOD=1)	–	0
ASEO	Source to substrate overlap area through oxide	–	0
CDSP	Constant drain-to-source fringe capacitance (All CGEOMOD)	–	0
CGDP	Constant gate-to-drain fringe capacitance (CGEOMOD=1)	–	0
CGSP	Constant gate-to-source fringe capacitance (CGEOMOD=1)	–	0
COVD	Constant g/d overlap capacitance (CGEOMOD=1)	–	0
COVS	Constant g/s overlap capacitance (CGEOMOD=1)	–	0
D	Diameter of the cylinder (GEOMOD=3)	–	4e-08
FPITCH	Fin pitch	–	8e-08
L	Designed Gate Length	–	3e-08
LRSD	Length of the source/drain	–	0
NFIN	Number of fins per finger (real number enables optimization)	–	1
NGCON	number of gate contact (1 or 2 sided)	–	1
NRD	Number of source diffusion squares	–	0
NRS	Number of source diffusion squares	–	0
PDEJ	Drain to substrate PN junction perimeter (BULKMOD=1)	–	0
PDEO	Perimeter of drain to substrate overlap region through oxide	–	0
PSEJ	Source to substrate PN junction perimeter (BULKMOD=1)	–	0

Table 2.95: BSIM-CMG FINFET v107.0.0 Device Instance Parameters

Parameter	Description	Units	Default
PSEO	Perimeter of source to substrate overlap region through oxide	–	0
TFIN	Body (Fin) thickness	–	1.5e-08

Table 2.96: BSIM-CMG FINFET v107.0.0 Device Model Parameters

Parameter	Description	Units	Default
A1	Non-saturation effect parameter for strong inversion region	–	0
A11	Temperature dependence of A1	–	0
A2	Non-saturation effect parameter for moderate inversion region	–	0
A21	Temperature dependence of A2	–	0
ADEJ	Drain junction area (BULKMOD=1)	–	0
ADEO	Drain to substrate overlap area through oxide	–	0
AEU		–	0
AGIDL	pre-exponential coeff. for GIDL in mho	–	0
AGISL	pre-exponential coeff. for GISL in mho	–	6.055e-12
AIGBACC	parameter for Igb in accumulation	–	0.0136
AIGBACC1	parameter for Igb in accumulation	–	0
AIGBINV	parameter for Igb in inversion	–	0.0111
AIGBINV1	parameter for Igb in inversion	–	0
AIGC	parameter for Igc in inversion	–	0.0136
AIGC1	parameter for Igc in inversion	–	0
AIGD	parameter for Igd in inversion	–	0
AIGD1	parameter for Igd in inversion	–	0
AIGEN	Thermal Generation Current Parameter	–	0
AIGS	parameter for Igs in inversion	–	0.0136
AIGS1	parameter for Igs in inversion	–	0
ALPHA0	first parameter of Iii	m/V	0
ALPHA01	Temperature dependence of ALPHA0, m/V/degrees	–	0
ALPHA1	L scaling parameter of Iii	V^{-1}	0
ALPHA11	Temperature dependence ALPHA1, 1/V/degree	–	0
ALPHAII0	first parameter of Iii for IIMOD=2, m/V	–	0

Table 2.96: BSIM-CMG FINFET v107.0.0 Device Model Parameters

Parameter	Description	Units	Default
ALPHAII01	Temperature dependence of ALPHAII0, m/V/degrees	–	0
ALPHAII1	L scaling parameter of Iii for IIMOD=2	V^{-1}	0
ALPHAII11	Temperature dependence of ALPHAII1, 1/V/degrees	–	0
AMEXP		–	0
AMEXPR		–	0
APCLM		–	0
APSAT		–	0
APSATCV		–	0
APTWG		–	0
AQMTCEN	Parameter for Geometric dependence of Tcen on R/TFIN/HFIN	–	0
ARDSW		–	0
ARDW		–	0
ARSDEND		–	0
ARSW		–	0
ASEJ	Source junction area (BULKMOD=1)	–	0
ASEO	Source to substrate overlap area through oxide	–	0
ASILIEND		–	0
ASYMMOD	Asymmetric model selector	–	0
AT		–	-0.00156
AUA		–	0
AUD		–	0
AVSAT		–	0
AVSAT1		–	0
AVSATCV		–	0
BETA0	Vds dependent parameter of Iii	V^{-1}	0
BETAII0	Vds dependent parameter of Iii	V^{-1}	0
BETAII1	Vds dependent parameter of Iii	–	0
BETAII2	Vds dependent parameter of Iii, V	–	0.1
BEU		–	1e-07
BG0SUB	Band gap of substrate at 300.15K, eV	–	1.12
BGIDL	exponential coeff. for GIDL	V/m	0
BGISL	exponential coeff. for GISL	V/m	3e+08

Table 2.96: BSIM-CMG FINFET v107.0.0 Device Model Parameters

Parameter	Description	Units	Default
BIGBACC	parameter for Igb in accumulation	–	0.00171
BIGBINV	parameter for Igb in inversion	–	0.000949
BIGC	parameter for Igc in inversion	–	0.00171
BIGD	parameter for Igd in inversion	–	0
BIGEN	Thermal Generation Current Parameter	–	0
BIGS	parameter for Igs in inversion	–	0.00171
BMEXP		–	1
BMEXPR		–	0
BPCLM		–	1e-07
BPSAT		–	1
BPSATCV		–	0
BPTWG		–	1e-07
BQMTCEN	Parameter for Geometric dependence of Tcen on R/TFIN/HFIN	–	1.2e-08
BRDSW		–	1e-07
BRDW		–	1e-07
BRSW		–	1e-07
BUA		–	1e-07
BUD		–	5e-08
BULKMOD	Bulk model	–	0
BVD	Drain diode breakdown voltage	–	0
BVS	Source diode breakdown voltage	–	10
BVSAT		–	1e-07
BVSAT1		–	0
BVSATCV		–	0
CAPMOD	Accumulation region capacitance model selector	–	0
CDSC	coupling capacitance between S/D and channel	–	0.007
CDSCD	drain-bias sensitivity of CDSC	–	0.007
CDSCDN1	NFIN dependence of CDSCD	–	0
CDSCDN2	NFIN dependence of CDSCD	–	100000
CDSCDR	Reverse-mode drain-bais sensitivity of CDSC (Experimental)	–	0
CDSCDRN1	NFIN dependence of CDSCD	–	0
CDSCDRN2	NFIN dependence of CDSCD	–	0
CDSCN1	NFIN dependence of CDSC	–	0

Table 2.96: BSIM-CMG FINFET v107.0.0 Device Model Parameters

Parameter	Description	Units	Default
CDSCN2	NFIN dependence of CDSC	–	100000
CDSP	Constant drain-to-source fringe capacitance (All CGEOMOD)	–	0
CFD	Outer Fringe Cap (drain side)	–	0
CFS	Outer Fringe Cap (source side)	–	2.5e-11
CGBL	Bias dependent component of Gate to substrate overlap cap	–	0
CGBN	Gate to substrate overlap cap per unit channel length per fin per finger	–	0
CGBO	Gate to substrate overlap cap per unit channel length per finger per NGCON	–	0
CGDL		–	0
CGDO	Non LDD region drain-gate overlap capacitance per unit channel width	–	0
CGDP	Constant gate-to-drain fringe capacitance (CGEOMOD=1)	–	0
CGEO1SW		–	0
CGEOA	Fitting parameter for CGEOMOD=2	–	1
CGEOB	Fitting parameter for CGEOMOD=2	–	0
CGEOC	Fitting parameter for CGEOMOD=2	–	0
CGEOD	Fitting parameter for CGEOMOD=2	–	0
CGEOE	Fitting parameter for CGEOMOD=2	–	1
CGEOMOD	parasitic capacitance model selector	–	0
CGIDL	parameter for body-effect of GIDL	V^3	0
CGISL	parameter for body-effect of GISL	V^3	0.5
CGSL		–	0
CGSO	Non LDD region source-gate overlap capacitance per unit channel width	–	0
CGSP	Constant gate-to-source fringe capacitance (CGEOMOD=1)	–	0
CHARGEWF	Average Channel Charge Weighting Factor, +1:source-side, 0:middle, -1:drain-side	–	0
CIGBACC	parameter for Igb in accumulation	–	0.075
CIGBINV	parameter for Igb in inversion	–	0.006
CIGC	parameter for Igc in inversion	–	0.075
CIGD	parameter for Igd in inversion	–	0
CIGS	parameter for Igs in inversion	–	0.075

Table 2.96: BSIM-CMG FINFET v107.0.0 Device Model Parameters

Parameter	Description	Units	Default
CIT	parameter for interface trap	–	0
CJD	Unit area drain-side junction capacitance at zero bias	–	0
CJS	Unit area source-side junction capacitance at zero bias	–	0.0005
CJSWD	Unit length drain-side sidewall junction capacitance at zero bias	–	0
CJSWGD	Unit length drain-side gate sidewall junction capacitance at zero bias	–	0
CJSWGS	Unit length source-side gate sidewall junction capacitance at zero bias	–	0
CJSWS	Unit length source-side sidewall junction capacitance at zero bias	–	5e-10
CKAPPAB		–	0.6
CKAPPAD		–	0
CKAPPAS		–	0.6
COREMOD	Surface potential algorithm	–	0
COVD	Constant g/d overlap capacitance (CGEOMOD=1)	–	0
COVS	Constant g/s overlap capacitance (CGEOMOD=1)	–	0
CRATIO		–	0.5
CSDESW	Coefficient for source/drain to substrate sidewall cap	–	0
CTH0	Thermal capacitance	–	1e-05
D	Diameter of the cylinder (GEOMOD=3)	–	4e-08
DELTAPRSD		–	0
DELTAVSAT		–	1
DELTAVSATCV		–	0
DELTAW	change of effective width due to shape of fin/cylinder	–	0
DELTAWCV	CV change of effective width due to shape of fin/cylinder	–	0
DELVFBACC	Change in Flatband Voltage; Vfb_accumulation-Vfb_inversion	–	0
DELVTRAND	Variability in Vth	–	0
DEVTYPE		–	1
DLBIN	Delta L for Binning	–	0

Table 2.96: BSIM-CMG FINFET v107.0.0 Device Model Parameters

Parameter	Description	Units	Default
DLC	Delta L for C-V model	–	0
DLCACC	Delta L for C-V model in accumulation region (CAPMOD=1, BULKMOD=1)	–	0
DLCIGD	Delta L for Igd model	–	0
DLCIGS	Delta L for Igs model	–	0
DROUT		–	1.06
DSUB	DIBL exponent coefficient	–	1.06
DTEMP	Variability in Device Temperature	–	0
DVT0	SCE coefficient	–	0
DVT1	SCE exponent coefficient, after binning should be in (0:inf)	–	0.6
DVT1SS	Subthreshold Swing exponent coefficient, after binning should be in (0:inf)	–	0
DVTP0	Coefficient for Drain-Induced Vth Shift (DITS)	–	0
DVTP1	DITS exponent coefficient	–	0
DVTSHIFT	Vth shift handle	–	0
EASUB	Electron affinity of substrate, eV	–	4.05
EF		–	1
EGIDL	band bending parameter for GIDL	V	0
EGISL	band bending parameter for GISL	V	0.2
EIGBINV	parameter for Igb in inversion	–	1.1
EM		–	4.1e+07
EMOBT		–	0
EOT	equivalent oxide thickness in meters	–	1e-09
EOTACC	equivalent oxide thickness for accumulation region in meters	m	0
EOTBOX	equivalent oxide thickness of the buried oxide (SOI FinFET) or STI (bulk FinFET) in meters	–	1.4e-07
EPSROX	Relative dielectric constant of the gate dielectric	–	3.9
EPSRSP	Relative dielectric constant of the spacer	–	3.9
EPSRSUB	Relative dielectric constant of the channel material	–	11.9
ESATII	Saturation channel E-Field for Iii	V/m	1e+07
ETA0	DIBL coefficient	–	0.6
ETA0N1	NFIN dependence of ETA0	–	0
ETA0N2	NFIN dependence of ETA0	–	100000

Table 2.96: BSIM-CMG FINFET v107.0.0 Device Model Parameters

Parameter	Description	Units	Default
ETAOR	Reverse-mode DIBL coefficient (Experimental)	–	0
ETAMOB		–	2
ETAQM	Bulk charge coefficient for Tcen	–	0.54
EU		–	2.5
FECH	End-channel factor, for different orientation/shape	–	1
FECHCV	CV end-channel factor, for different orientaion/shape	–	1
FPITCH	Fin pitch	–	8e-08
GEOMOD	Geometry mode selector	–	1
GIDLMOD	GIDL/GISL current switcher	–	0
HEPI	Height of the raised source/drain on top of the fin	–	1e-08
HFIN	Fin height in meters	–	3e-08
IDSOMULT	Variability in Drain current for misc. reasons	–	1
IGBMOD	model selector for Igb	–	0
IGCMOD	model selector for Igc, Igs, and Igd	–	0
IGT	Gate Current Temperature Dependence	–	2.5
IIMOD	Impact ionization model switch	–	0
IIT	Impact Ionization Temperature Dependence, IIMOD=1	–	-0.5
IJTHDFWD	Forward drain diode breakdown limiting current	–	0
IJTHDREV	Reverse drain diode breakdown limiting current	–	0
IJTHSFWD	Forward source diode breakdown limiting current	–	0.1
IJTHSREV	Reverse source diode breakdown limiting current	–	0.1
IMIN	Parameter for Vgs Clamping for inversion region calc. in accumulation	–	1e-15
JSD	Bottom drain junction reverse saturation current density	–	0
JSS	Bottom source junction reverse saturation current density	–	0.0001
JSWD	Unit length reverse saturation current for sidewall drain junction	–	0
JSWGD	Unit length reverse saturation current for gate-edge sidewall drain junction	–	0
JSWGS	Unit length reverse saturation current for gate-edge sidewall source junction	–	0

Table 2.96: BSIM-CMG FINFET v107.0.0 Device Model Parameters

Parameter	Description	Units	Default
JSWS	Unit length reverse saturation current for sidewall source junction	–	0
JTSD	Bottom drain junction trap-assisted saturation current density	–	0
JTSS	Bottom source junction trap-assisted saturation current density	–	0
JTSSWD	Unit length trap-assisted saturation current for sidewall drain junction	–	0
JTSSWGD	Unit length trap-assisted saturation current for gate-edge sidewall drain junction	–	0
JTSSWGS	Unit length trap-assisted saturation current for gate-edge sidewall source junction	–	0
JTSSWS	Unit length trap-assisted saturation current for sidewall source junction	–	0
JTWEFF	Trap assisted tunneling current width dependence	–	0
K0	Lateral NUD voltage parameter, V	–	0
K01	Temperature dependence of lateral NUD voltage parameter, V/K	–	0
K0SI	Correction factor for strong inversion, used in Mnud, after binnig should be from (0:inf)	–	1
K0SI1	Temperature dependence of K0SI, 1/K	–	0
K1	Body effect coefficient for sub-threshold region	–	0
K11	Temperature dependence of K1	–	0
K1RSCE	K1 for reverse short channel effect calculation	–	0
K1SAT	Correction factor for K1 in saturation (high Vds)	–	0
K1SAT1	Temperature dependence of K1SAT1	–	0
K1SI	Correction factor for strong inversion, used in Mob	–	0
K1SI1	Temperature dependence of K1SI, 1/K	–	0
KSATIV		–	1
KT1	Vth Temperature Coefficient (V)	–	0
KT1L	Vth Temperature L Coefficient (m-V)	–	0
L	Designed Gate Length	–	3e-08
LA1		–	0
LA11		–	0
LA2		–	0
LA21		–	0

Table 2.96: BSIM-CMG FINFET v107.0.0 Device Model Parameters

Parameter	Description	Units	Default
LAGIDL		–	0
LAGISL		–	0
LAIGBACC		–	0
LAIGBACC1		–	0
LAIGBINV		–	0
LAIGBINV1		–	0
LAIGC		–	0
LAIGC1		–	0
LAIGD		–	0
LAIGD1		–	0
LAIGEN		–	0
LAIGS		–	0
LAIGS1		–	0
LALPHA0		–	0
LALPHA1		–	0
LALPHAII0		–	0
LALPHAII1		–	0
LAT		–	0
LBETA0		–	0
LBETAII0		–	0
LBETAII1		–	0
LBETAII2		–	0
LBGIDL		–	0
LBGISL		–	0
LBIGBACC		–	0
LBIGBINV		–	0
LBIGC		–	0
LBIGD		–	0
LBIGEN		–	0
LBIGS		–	0
LCDSC		–	0
LCDSCD		–	0
LCDSCDR		–	0
LCFD		–	0

Table 2.96: BSIM-CMG FINFET v107.0.0 Device Model Parameters

Parameter	Description	Units	Default
LCFS		–	0
LCGBL		–	0
LCGDL		–	0
LCGIDL		–	0
LCGISL		–	0
LCGSL		–	0
LCIGBACC		–	0
LCIGBINV		–	0
LCIGC		–	0
LCIGD		–	0
LCIGS		–	0
LCIT		–	0
LCKAPPAB		–	0
LCKAPPAD		–	0
LCKAPPAS		–	0
LCOVD		–	0
LCOVS		–	0
LDELTAVSAT		–	0
LDELTAVSATCV		–	0
LDROUT		–	0
LDSUB		–	0
LDVT0		–	0
LDVT1		–	0
LDVT1SS		–	0
LDVTB		–	0
LDVTSHIFT		–	0
LEGIDL		–	0
LEGISL		–	0
LEIGBINV		–	0
LEMOBT		–	0
LESATII		–	0
LETA0		–	0
LETA0R		–	0
LETAMOB		–	0

Table 2.96: BSIM-CMG FINFET v107.0.0 Device Model Parameters

Parameter	Description	Units	Default
LEU		–	0
LIGT		–	0
LII	Channel length dependent parameter of Iii	Vm	5e-10
LIIT		–	0
LINT	Length reduction parameter (dopant diffusion effect)	–	0
LINTIGEN	Lint for Thermal Generation Current	–	0
LINTNOI		–	0
LK0		–	0
LK01		–	0
LK0SI		–	0
LK0SI1		–	0
LK1		–	0
LK11		–	0
LK1RSCE		–	0
LK1SAT		–	0
LK1SAT1		–	0
LK1SI		–	0
LK1SI1		–	0
LKSATIV		–	0
LKT1		–	0
LL	Length reduction parameter (dopant diffusion effect)	–	0
LLC	Length reduction parameter (dopant diffusion effect)	–	0
LLII		–	0
LLN	Length reduction parameter (dopant diffusion effect)	–	1
LLPE0		–	0
LLPEB		–	0
LMEXP		–	0
LMEXPR		–	0
LNBODY		–	0
LNGATE		–	0
LNIGBACC		–	0

Table 2.96: BSIM-CMG FINFET v107.0.0 Device Model Parameters

Parameter	Description	Units	Default
LNIGBINV		–	0
LNTGEN		–	0
LNTOX		–	0
LPA		–	1
LPCLM		–	0
LPCLMCV		–	0
LPCLMG		–	0
LPDIBL1		–	0
LPDIBL1R		–	0
LPDIBL2		–	0
LPE0	Equivalent length of pocket region at zero bias	–	5e-09
LPGIDL		–	0
LPGISL		–	0
LPHIBE		–	0
LPHIG		–	0
LPHIN		–	0
LPIGCD		–	0
LPOXEDGE		–	0
LPRT		–	0
LPRWGD		–	0
LPRWGS		–	0
LPSAT		–	0
LPSATCV		–	0
LPTWG		–	0
LPTWGR		–	0
LPTWGT		–	0
LPVAG		–	0
LQMFACTOR		–	0
LQMTCENCV		–	0
LQMTCENCVA		–	0
LQMTCENIV		–	0
LRDSW		–	0
LRDW		–	0
LRSD	Length of the source/drain	–	0

Table 2.96: BSIM-CMG FINFET v107.0.0 Device Model Parameters

Parameter	Description	Units	Default
LRSW		–	0
LSII0		–	0
LSII1		–	0
LSII2		–	0
LSIID		–	0
LSP		–	0
LSTTHETASAT		–	0
LTGIDL		–	0
LTII		–	0
LTSS		–	0
LU0		–	0
LUA		–	0
LUA1		–	0
LUC		–	0
LUC1		–	0
LUCS		–	0
LUCSTE		–	0
LUD		–	0
LUD1		–	0
LUP		–	0
LUTE		–	0
LUTL		–	0
LVSAT		–	0
LVSAT1		–	0
LVSAT1R		–	0
LVSATCV		–	0
LWR		–	0
LXRCRG1		–	0
LXRCRG2		–	0
MEXP		–	4
MEXPR		–	0
MJD	Drain bottom junction capacitance grading coefficient	–	0
MJD2	Drain bottom two-step second junction capacitance grading coefficient	–	0

Table 2.96: BSIM-CMG FINFET v107.0.0 Device Model Parameters

Parameter	Description	Units	Default
MJS	Source bottom junction capacitance grading coefficient	–	0.5
MJS2	Source bottom two-step second junction capacitance grading coefficient	–	0.125
MJSWD	Drain sidewall junction capacitance grading coefficient	–	0
MJSWD2	Drain sidewall two-step second junction capacitance grading coefficient	–	0
MJSWGD	Drain-side gate sidewall junction capacitance grading coefficient	–	0
MJSWGD2	Drain-side gate sidewall two-step	–	0
MJSWGS	Source-side gate sidewall junction capacitance grading coefficient	–	0
MJSWGS2	Source-side gate sidewall two-step	–	0
MJSWS	Source sidewall junction capacitance grading coefficient	–	0.33
MJSWS2	Source sidewall two-step second junction capacitance grading coefficient	–	0.083
NA1		–	0
NA11		–	0
NA2		–	0
NA21		–	0
NAGIDL		–	0
NAGISL		–	0
NAIGBACC		–	0
NAIGBACC1		–	0
NAIGBINV		–	0
NAIGBINV1		–	0
NAIGC		–	0
NAIGC1		–	0
NAIGD		–	0
NAIGD1		–	0
NAIGEN		–	0
NAIGS		–	0
NAIGS1		–	0
NALPHA0		–	0
NALPHA1		–	0

Table 2.96: BSIM-CMG FINFET v107.0.0 Device Model Parameters

Parameter	Description	Units	Default
NALPHAII0		–	0
NALPHAII1		–	0
NAT		–	0
NBETA0		–	0
NBETAII0		–	0
NBETAII1		–	0
NBETAII2		–	0
NBGIDL		–	0
NBGISL		–	0
NBIGBACC		–	0
NBIGBINV		–	0
NBIGC		–	0
NBIGD		–	0
NBIGEN		–	0
NBIGS		–	0
NBODY	channel (body) doping	–	1e+22
NBODYN1	NFIN dependence of channel (body) doping	–	0
NBODYN2	NFIN dependence of channel (body) doping	–	100000
NC0SUB	Conduction band density of states, m-3	–	2.86e+25
NCDSC		–	0
NCDSCD		–	0
NCDSCDR		–	0
NCFD		–	0
NCFS		–	0
NCGBL		–	0
NCGDL		–	0
NCGIDL		–	0
NCGISL		–	0
NCGSL		–	0
NCIGBACC		–	0
NCIGBINV		–	0
NCIGC		–	0
NCIGD		–	0
NCIGS		–	0

Table 2.96: BSIM-CMG FINFET v107.0.0 Device Model Parameters

Parameter	Description	Units	Default
NCIT		–	0
NCKAPPAB		–	0
NCKAPPAD		–	0
NCKAPPAS		–	0
NCOVD		–	0
NCOVS		–	0
NDELTAVSAT		–	0
NDELTAVSATCV		–	0
NDROUT		–	0
NDSUB		–	0
NDVT0		–	0
NDVT1		–	0
NDVT1SS		–	0
NDVTB		–	0
NDVTSHIFT		–	0
NEGIDL		–	0
NEGISL		–	0
NEIGBINV		–	0
NEMOBT		–	0
NESATII		–	0
NETA0		–	0
NETA0R		–	0
NETAMOB		–	0
NEU		–	0
NF	Number of fingers	–	1
NFIN	Number of fins per finger (real number enables optimization)	–	1
NGATE	Parameter for Poly Gate Doping, for metal gate please set NGATE = 0	–	0
NGCON	number of gate contact (1 or 2 sided)	–	1
NI0SUB	Intrinsic carrier constant at 300.15K, m-3	–	1.1e+16
NIGBACC	parameter for Igb in accumulation	–	1
NIGBINV	parameter for Igb in inversion	–	3
NIGT		–	0
NIIT		–	0

Table 2.96: BSIM-CMG FINFET v107.0.0 Device Model Parameters

Parameter	Description	Units	Default
NJD	Drain junction emission coefficient	–	0
NJS	Source junction emission coefficient	–	1
NJTS	Non-ideality factor for JTSS	–	20
NJTSD	Non-ideality factor for JTSD	–	0
NJTSSW	Non-ideality factor for JTSSWS	–	20
NJTSSWD	Non-ideality factor for JTSSWD	–	0
NJTSSWG	Non-ideality factor for JTSSWGS	–	20
NJTSSWGD	Non-ideality factor for JTSSWGD	–	0
NK0		–	0
NK01		–	0
NK0SI		–	0
NK0SI1		–	0
NK1		–	0
NK11		–	0
NK1RSCE		–	0
NK1SAT		–	0
NK1SAT1		–	0
NK1SI		–	0
NK1SI1		–	0
NKSATIV		–	0
NKT1		–	0
NLII		–	0
NLPE0		–	0
NLPEB		–	0
NMEXP		–	0
NMEXPR		–	0
NNBODY		–	0
NNGATE		–	0
NNIGBACC		–	0
NNIGBINV		–	0
NNTGEN		–	0
NNTOX		–	0
NOIA		–	6.25e+39
NOIB		–	3.125e+24

Table 2.96: BSIM-CMG FINFET v107.0.0 Device Model Parameters

Parameter	Description	Units	Default
NOIC		–	8.75e+07
NPCLM		–	0
NPCLMCV		–	0
NPCLMG		–	0
NPDIBL1		–	0
NPDIBL1R		–	0
NPDIBL2		–	0
NPGIDL		–	0
NPGISL		–	0
NPHIBE		–	0
NPHIG		–	0
NPHIN		–	0
NPIGCD		–	0
NPOXEDGE		–	0
NPRT		–	0
NPRWGD		–	0
NPRWGS		–	0
NPSAT		–	0
NPSATCV		–	0
NPTWG		–	0
NPTWGR		–	0
NPTWGT		–	0
NPVAG		–	0
NQMFACTOR		–	0
NQMTCENCV		–	0
NQMTCENCVA		–	0
NQMTCENIV		–	0
NQSMOD		–	0
NRD	Number of source diffusion squares	–	0
NRDSW		–	0
NRDW		–	0
NRS	Number of source diffusion squares	–	0
NRSW		–	0
NSD	Source/drain active doping concentration in m-3	–	2e+26

Table 2.96: BSIM-CMG FINFET v107.0.0 Device Model Parameters

Parameter	Description	Units	Default
NSDE	Source/drain active doping concentration at Leff edge	–	2e+25
NSEG	Number of segments for NQSMOD=3 (3,5 and 10 supported)	–	4
NSII0		–	0
NSII1		–	0
NSII2		–	0
NSIID		–	0
NSTTHETASAT		–	0
NTGEN	Thermal Generation Current Parameter	–	1
NTGIDL		–	0
NTII		–	0
NTNOI		–	1
NTOX	Exponent for Tox ratio	–	1
NTSS		–	0
NU0		–	0
NUA		–	0
NUA1		–	0
NUC		–	0
NUC1		–	0
NUCS		–	0
NUCSTE		–	0
NUD		–	0
NUD1		–	0
NUP		–	0
NUTE		–	0
NUTL		–	0
NVSAT		–	0
NVSAT1		–	0
NVSAT1R		–	0
NVSATCV		–	0
NWR		–	0
NXRCRG1		–	0
NXRCRG2		–	0
PA1		–	0

Table 2.96: BSIM-CMG FINFET v107.0.0 Device Model Parameters

Parameter	Description	Units	Default
PA11		–	0
PA2		–	0
PA21		–	0
PAGIDL		–	0
PAGISL		–	0
PAIGBACC		–	0
PAIGBACC1		–	0
PAIGBINV		–	0
PAIGBINV1		–	0
PAIGC		–	0
PAIGC1		–	0
PAIGD		–	0
PAIGD1		–	0
PAIGEN		–	0
PAIGS		–	0
PAIGS1		–	0
PALPHA0		–	0
PALPHA1		–	0
PALPHAII0		–	0
PALPHAII1		–	0
PAT		–	0
PBD	Drain-side bulk junction built-in potential	–	0
PBETA0		–	0
PBETAII0		–	0
PBETAII1		–	0
PBETAII2		–	0
PBGIDL		–	0
PBGISL		–	0
PBIGBACC		–	0
PBIGBINV		–	0
PBIGC		–	0
PBIGD		–	0
PBIGEN		–	0
PBIGS		–	0

Table 2.96: BSIM-CMG FINFET v107.0.0 Device Model Parameters

Parameter	Description	Units	Default
PBS	Source-side bulk junction built-in potential	–	1
PBSWD	Built-in potential for Drain-side sidewall junction capacitance	–	0
PBSWGD	Built-in potential for Drain-side gate sidewall junction capacitance	–	0
PBSWGS	Built-in potential for Source-side gate sidewall junction capacitance	–	0
PBSWS	Built-in potential for Source-side sidewall junction capacitance	–	1
PCDSC		–	0
PCDSCD		–	0
PCDSCDR		–	0
PCFD		–	0
PCFS		–	0
PCGBL		–	0
PCGDL		–	0
PCGIDL		–	0
PCGISL		–	0
PCGSL		–	0
PCIGBACC		–	0
PCIGBINV		–	0
PCIGC		–	0
PCIGD		–	0
PCIGS		–	0
PCIT		–	0
PCKAPPAB		–	0
PCKAPPAD		–	0
PCKAPPAS		–	0
PCLM		–	0.013
PCLMCV	CLM parameter for Short Channel CV	–	0
PCLMG		–	0
PCOVD		–	0
PCOVS		–	0
PDEJ	Drain to substrate PN junction perimeter (BULKMOD=1)	–	0
PDELTAVSAT		–	0

Table 2.96: BSIM-CMG FINFET v107.0.0 Device Model Parameters

Parameter	Description	Units	Default
PDELTAVSATCV		–	0
PDEO	Perimeter of drain to substrate overlap region through oxide	–	0
PDIBL1	DIBL Output Conductance parameter - forward mode	–	1.3
PDIBL1R	DIBL Output Conductance parameter - reverse mode	–	0
PDIBL2	DIBL Output Conductance parameter	–	0.0002
PDROUT		–	0
PDSUB		–	0
PDVT0		–	0
PDVT1		–	0
PDVT1SS		–	0
PDVTB		–	0
PDVTSHIFT		–	0
PEGIDL		–	0
PEGISL		–	0
PEIGBINV		–	0
PEMOBT		–	0
PESATII		–	0
PETA0		–	0
PETA0R		–	0
PETAMOB		–	0
PEU		–	0
PGIDL	parameter for body-bias effect on GIDL	–	0
PGISL	parameter for body-bias effect on GISL	–	1
PHIBE	Body effect voltage parameter, V, after binnig should be from [0.2:1.2]	–	0.7
PHIG	Gate workfunction, eV	–	4.61
PHIGL	Length dependence of Gate workfunction, eV/m	–	0
PHIGN1	NFIN dependence of Gate workfunction	–	0
PHIGN2	NFIN dependence of Gate workfunction	–	100000
PHIN	Nonuniform vertical doping effect on surface potential, V	–	0.05
PIGCD	parameter for Igc partition	–	1
PIGT		–	0

Table 2.96: BSIM-CMG FINFET v107.0.0 Device Model Parameters

Parameter	Description	Units	Default
PIIT		–	0
PK0		–	0
PK01		–	0
PK0SI		–	0
PK0SI1		–	0
PK1		–	0
PK11		–	0
PK1RSCE		–	0
PK1SAT		–	0
PK1SAT1		–	0
PK1SI		–	0
PK1SI1		–	0
PKSATIV		–	0
PKT1		–	0
PLII		–	0
PLPE0		–	0
PLPEB		–	0
PMEXP		–	0
PMEXPR		–	0
PNBODY		–	0
PNGATE		–	0
PNIGBACC		–	0
PNIGBINV		–	0
PNTGEN		–	0
PNTOX		–	0
POXEDGE	Factor for the gate edge Tox	–	1
PPCLM		–	0
PPCLMCV		–	0
PPCLMG		–	0
PPDIBL1		–	0
PPDIBL1R		–	0
PPDIBL2		–	0
PPGIDL		–	0
PPGISL		–	0

Table 2.96: BSIM-CMG FINFET v107.0.0 Device Model Parameters

Parameter	Description	Units	Default
PPHIBE		–	0
PPHIG		–	0
PPHIN		–	0
PPIGCD		–	0
PPOXEDGE		–	0
PPRT		–	0
PPRWGD		–	0
PPRWGS		–	0
PPSAT		–	0
PPSATCV		–	0
PPTWG		–	0
PPTWGR		–	0
PPTWGT		–	0
PPVAG		–	0
PQM	Slope of normalized Tcen in inversion	–	0.66
PQMACC	Slope of normalized Tcen in accumulation	–	0.66
PQMFACTOR		–	0
PQMTCENCV		–	0
PQMTCENCVA		–	0
PQMTCENIV		–	0
PRDDR	Drain side quasi-saturation parameter	–	0
PRDSW		–	0
PRDW		–	0
PRSDEND		–	0
PRSDR	Source side quasi-saturation parameter	–	1
PRSW		–	0
PRT		–	0.001
PRWGD	Gate bias dependence of drain extension resistance	V^{-1}	0
PRWGS	Gate bias dependence of source extension resistance	V^{-1}	0
PSAT	Velocity saturation exponent, after binnig should be from [2.0:inf)	–	2
PSATCV	Velocity saturation exponent for C-V	–	0

Table 2.96: BSIM-CMG FINFET v107.0.0 Device Model Parameters

Parameter	Description	Units	Default
PSEJ	Source to substrate PN junction perimeter (BULKMOD=1)	–	0
PSEO	Perimeter of source to substrate overlap region through oxide	–	0
PSII0		–	0
PSII1		–	0
PSII2		–	0
PSIID		–	0
PSTTHETASAT		–	0
PTGIDL		–	0
PTII		–	0
PTSS		–	0
PTWG	Gmsat degradation parameter - forward mode	–	0
PTWGR	Gmsat degradation parameter - reverse mode	–	0
PTWGT		–	0.004
PU0		–	0
PUA		–	0
PUA1		–	0
PUC		–	0
PUC1		–	0
PUCS		–	0
PUCSTE		–	0
PUD		–	0
PUD1		–	0
PUP		–	0
PUTE		–	0
PUTL		–	0
PVAG		–	1
PVSAT		–	0
PVSAT1		–	0
PVSAT1R		–	0
PVSATCV		–	0
PWR		–	0
PXRCRG1		–	0
PXRCRG2		–	0

Table 2.96: BSIM-CMG FINFET v107.0.0 Device Model Parameters

Parameter	Description	Units	Default
QM0	Knee-Point for Tcen in inversion (Charge normalized to Cox)	–	0.001
QM0ACC	Knee-Point for Tcen in accumulation (Charge normalized to Cox)	–	0.001
QMFACTOR	Prefactor + switch for QM Vth correction	–	0
QMTCENCV	Prefactor + switch for QM Width and Toxeff correction for CV	–	0
QMTCENCVA	Prefactor + switch for QM Width and Toxeff correction for CV (accumulation region)	–	0
QMTCENIV	Prefactor + switch for QM Width correction for IV	–	0
RDDR	Drain side drift resistance parameter - forward mode	–	0
RDDRR	Drain side drift resistance parameter - reverse mode	–	0
RDSMOD	Resistance model selector	–	0
RDSW		–	100
RDSWMIN		–	0
RDW		–	50
RDWMIN		–	0
RGATEMOD	Gate electrode resistor and ge node switcher — NOT USED IN XYCE	–	0
RGEOA	Fitting parameter for RGEOMOD=1	–	1
RGEOB	Fitting parameter for RGEOMOD=1	–	0
RGEOC	Fitting parameter for RGEOMOD=1	–	0
RGEOD	Fitting parameter for RGEOMOD=1	–	0
RGEOE	Fitting parameter for RGEOMOD=1	–	0
RGEOMOD	Bias independent parasitic resistance model selector	–	0
RGEXT	Effective gate electrode external resistance	–	0
RGFIN	Effective gate electrode per finger per fin resistance	–	0.001
RHOC		–	1e-12
RHORSD		–	1
RSDR	Source side drift resistance parameter - forward mode	–	0
RSDRR	Source side drift resistance parameter - reverse mode	–	0
RSHD	Drain-side sheet resistance	–	0

Table 2.96: BSIM-CMG FINFET v107.0.0 Device Model Parameters

Parameter	Description	Units	Default
RSHS	Source-side sheet resistance	–	0
RSW		–	50
RSWMIN		–	0
RTH0	Thermal resistance	–	0.01
SDTERM		–	0
SHMOD	Self heating and T node switcher — NOT USED IN XYCE	–	0
SII0	Vgs dependent parameter of Iii	V^{-1}	0.5
SII1	1st Vgs dependent parameter of Iii	V^{-1}	0.1
SII2	2nd Vgs dependent parameter of Iii	–	0
SIID	3rd Vds dependent parameter of Iii	V^{-1}	0
SJD	Constant for drain-side two-step second junction	–	0
SJS	Constant for source-side two-step second junction	–	0
SJSWD	Constant for drain-side sidewall two-step second junction	–	0
SJSWGD	Constant for source-side gate sidewall two-step second junction	–	0
SJSWGS	Constant for source-side gate sidewall two-step second junction	–	0
SJSWS	Constant for source-side sidewall two-step second junction	–	0
TBGASUB	Bandgap Temperature Coefficient (eV / degrees)	–	0.000702
TBGBSUB	Bandgap Temperature Coefficient (degrees)	–	1108
TCJ	Temperature coefficient for CJS/CJD	–	0
TCJSW	Temperature coefficient for CJSWS/CJSWD	–	0
TCJSWG	Temperature coefficient for CJSWGS/CJSWGD	–	0
TETA0	Temperature dependence of DIBL coefficient, 1/K	–	0
TETA0R	Temperature dependence of Reverse-mode DIBL coefficient, 1/K	–	0
TFIN	Body (Fin) thickness	–	1.5e-08
TGATE	Gate height on top of the hard mask	–	3e-08
TGIDL	GIDL/GISL Temperature Dependence	–	-0.003
TII	Impact Ionization Temperature Dependence, IIMOD=2	–	0
TMASK	Height of hard mask on top of the fin	–	3e-08

Table 2.96: BSIM-CMG FINFET v107.0.0 Device Model Parameters

Parameter	Description	Units	Default
TMEXP		–	0
TMEXPR		–	0
TNJTS	Temperature coefficient for NJTS	–	0
TNJTSD	Temperature coefficient for NJTSD	–	0
TNJTSSW	Temperature coefficient for NJTSSW	–	0
TNJTSSWD	NTemperature coefficient for NJTSSWD	–	0
TNJTSSWG	Temperature coefficient for NJTSSWG	–	0
TNJTSSWGD	Temperature coefficient for NJTSSWGD	–	0
TNOM	Temperature at which the model is extracted (degrees)	–	27
TOXG	oxide thickness for gate current model in meters, Introduced in BSIM-CMG106.1.0	m	0
TOXP	physical oxide thickness in meters	–	1.2e-09
TOXREF	Target tox value [m]	–	1.2e-09
TPB	Temperature coefficient for PBS/PBD	–	0
TPBSW	Temperature coefficient for PBSWS/PBSWD	–	0
TPBSWG	Temperature coefficient for PBSWGS/PBSWGD	–	0
TRDDR		–	0
TRSDR		–	0
TSILI	Thickness of the silicide on top of the raised source/drain	–	1e-08
TSS	SSwing Temperature Coefficient (/ degrees)	–	0
U0		–	0.03
U0MULT	Variability in carrier mobility	–	1
U0N1	NFIN dependence of U0	–	0
U0N2	NFIN dependence of U0	–	100000
UA		–	0.3
UA1		–	0.001032
UC	Body effect for mobility degradation parameter - BULKMOD=1	–	0
UC1		–	5.6e-11
UCS		–	1
UCSTE		–	-0.004775
UD		–	0
UD1		–	0

Table 2.96: BSIM-CMG FINFET v107.0.0 Device Model Parameters

Parameter	Description	Units	Default
UP		–	0
UTE		–	0
UTL		–	-0.0015
VSAT		–	85000
VSAT1	Velocity Saturation parameter for I_on degradation - forward mode	–	0
VSAT1N1	NFIN dependence of VSAT1	–	0
VSAT1N2	NFIN dependence of VSAT1	–	0
VSAT1R	Velocity Saturation parameter for I_on degradation - reverse mode	–	0
VSAT1RN1	NFIN dependence of VSAT1R	–	0
VSAT1RN2	NFIN dependence of VSAT1R	–	0
VSATCV	Velocity Saturation parameter for CV	–	0
VSATN1	NFIN dependence of VSAT	–	0
VSATN2	NFIN dependence of VSAT	–	100000
VTSD	Bottom drain junction trap-assisted current voltage dependent parameter	–	0
VTSS	Bottom source junction trap-assisted current voltage dependent parameter	–	10
VTSSWD	Unit length trap-assisted current voltage dependent parameter for sidewall drain junction	–	0
VTSSWGD	Unit length trap-assisted current voltage dependent parameter for gate-edge sidewall drain junction	–	0
VTSSWGS	Unit length trap-assisted current voltage dependent parameter for gate-edge sidewall source junction	–	10
VTSSWS	Unit length trap-assisted current voltage dependent parameter for sidewall source junction	–	10
WR		–	1
WTH0	Width dependence coefficient for Rth and Cth	–	0
XJBVD	Fitting parameter for drain diode breakdown current	–	0
XJBVS	Fitting parameter for source diode breakdown current	–	1
XL	L offset for channel length due to mask/etch effect	–	0
XRCRG1		–	12

Table 2.96: BSIM-CMG FINFET v107.0.0 Device Model Parameters

Parameter	Description	Units	Default
XRCRG2		–	1
XTID	Drain junction current temperature exponent	–	0
XTIS	Source junction current temperature exponent	–	3
XTSD	Power dependence of JTSD on temperature	–	0
XTSS	Power dependence of JTSS on temperature	–	0.02
XTSSWD	Power dependence of JTSSWD on temperature	–	0
XTSSWGD	Power dependence of JTSSWGD on temperature	–	0
XTSSWGS	Power dependence of JTSSWGS on temperature	–	0.02
XTSSWS	Power dependence of JTSSWS on temperature	–	0.02

Levels 2000 and 2001 MOSFET Tables (MVS version 2.0.0)

Xyce includes the MIT Virtual Source (MVS) MOSFET model version 2.0.0 in both ETSOI and HEMT variants. The code in **Xyce** was generated from the MIT Verilog-A input. Model parameters for the MVS model are given in 2.97 and 2.98. The MVS model does not have instance parameters. Details of the model are documented MVS Nanotransistor Model 2.0.0 manual, available from the NEEDS web site at `https://nanohub.org/publications/74/1`.

NOTE: Unlike all other MOSFET models in Xyce, the MVS model takes only 3 nodes, the drain, gate and source. It takes no substrate node.

Table 2.97: MVS ETSOI 2.0.0 Device Model Parameters

Parameter	Description	Units	Default
B		–	6.8e-09
BETA		–	1.55
CINS		–	0.0317
DELTA		–	0.12
DLG		–	1.05e-08
DQM0		–	4.6e-09
ENERGY_DIFF_VOLT		–	0.153
EPS		–	13.6
KSEE		–	0.1
LGDR		–	8e-08
ML		–	0.89
MT		–	0.19
MU_EFF		–	1
N0		–	1.35
ND		–	0
NU		–	0.7
RS0		–	0.00016
THETA		–	2.5
TJUN		–	300
TYPE		–	1
VERSION		–	2
W		–	1e-06

Table 2.98: MVS HEMT 2.0.0 Device Model Parameters

Parameter	Description	Units	Default
B		–	6.8e-09

Table 2.98: MVS HEMT 2.0.0 Device Model Parameters

Parameter	Description	Units	Default
BETA		–	1.55
CINS		–	0.0317
DELTA		–	0.12
DLG		–	1.05e-08
DQM0		–	4.6e-09
ENERGY_DIFF_VOLT		–	0.153
EPS		–	13.6
KSEE		–	0.1
LGDR		–	8e-08
MEFF		–	0.041
MU_EFF		–	1
N0		–	1.35
NACC		–	2.25e+16
ND		–	0
NP_MASS		–	9
RC0		–	0.00016
THETA		–	2.5
TJUN		–	300
TYPE		–	1
VERSION		–	2
W		–	1e-06

Level 301 MOSFET Tables (EKV version 3.0.1)

Xyce includes the EKV MOSFET model, version 3.0.1 [15][27][28]. Full documentation for the EKV3 model is available on the **Xyce** internal web site; the documentation for the EKV3 model may be freely redistributed. Instance and model parameters for the EKV model are given in tables 2.99 and 2.100.

The EKV3 model is developed by the EKV Team of the Electronics Laboratory-TUC (Technical University of Crete). It is included in **Xyce** under license from Technical University of Crete. The official web site of the EKV model is `http://ekv.epfl.ch/`.

Due to licensing restrictions, the EKV3 MOSFET is not available in open-source versions of Xyce. The license for EKV3 authorizes Sandia National Laboratories to distribute EKV3 only in binary versions of code.

Table 2.99: EKV3 MOSFET Device Instance Parameters

Parameter	Description	Units	Default
AD	DRAIN'S AREA	–	0
AS	SOURCE'S AREA	–	0
L	GATE'S LENGTH	–	1e-05
M	NUMBER OF DEVICES IN PARALLEL	–	1
NF	NUMBER OF FINGERS	–	1
PD	DRAIN'S PERIMETER	–	0
PS	SOURCE'S PERIMETER	–	0
SA	STI PARAMETER; DISTANCE FROM STI	–	0
SB	STI PARAMETER; DISTANCE FROM STI	–	0
SD	STI PARAMETER; DISTANCE BETWEEN GATES	–	0
W	GATE'S WIDTH	–	1e-05

Table 2.100: EKV3 MOSFET Device Model Parameters

Parameter	Description	Units	Default
ACLM		–	0.83
AF		–	1
AGAM		–	0
AGAMMA	MATCHING PARAMETER FOR BODY FACTOR (GAMMA)	–	0
AGIDL		–	0
AKP	MATCHING PARAMETER FOR MOBILITY (KP)	–	0
AQMA		–	0.5
AQMI		–	0.4

Table 2.100: EKV3 MOSFET Device Model Parameters

Parameter	Description	Units	Default
AVT		–	0
AVTO	MATCHING PARAMETER FOR THRESHOLD VOLTAGE (VTO)	–	0
BEX		–	-1.5
BGIDL		–	2.3e+09
BVD		–	10
BVS		–	10
CGBO		–	0
CGDO		–	0
CGIDL		–	0.5
CGSO		–	0
CJD		–	0
CJF		–	0
CJS		–	0
CJSWD		–	0
CJSWGD		–	0
CJSWGS		–	0
CJSWS		–	0
COX		–	0.012
DDITS		–	0.3
DELTA		–	2
DFR		–	0.001
DGAMMAEDGE		–	0
DL		–	-1e-08
DLC		–	0
DPHIEDGE		–	0
DW		–	-1e-08
DWC		–	0
E0		–	1e+10
E1		–	3.1e+08
EB		–	2.9e+10
EF		–	2
EGIDL		–	0.8
ETA		–	0.5
ETAD		–	1

Table 2.100: EKV3 MOSFET Device Model Parameters

Parameter	Description	Units	Default
ETAQM		–	0.75
FLR		–	0
FPROUT		–	1e+06
GAMMA		–	0.3
GAMMAG		–	4.1
GAMMAGOV		–	10
GAMMAOV		–	1.6
GC		–	1
GMIN		–	0
HDIF		–	0
IBA		–	0
IBB		–	3e+08
IBBT		–	0.0008
IBN		–	1
INFO_LEVEL		–	0
JSD		–	0
JSS		–	0
JSSWD		–	0
JSSWGD		–	0
JSSWGS		–	0
JSSWS		–	0
JTSD		–	0
JTSS		–	0
JTSSWD		–	0
JTSSWGD		–	0
JTSSWGS		–	0
JTSSWS		–	0
KA		–	0
KB		–	0
KETAD		–	0
KF		–	0
KG		–	0
KGAMMA		–	0
KGFN		–	0
KJF		–	0

Table 2.100: EKV3 MOSFET Device Model Parameters

Parameter	Description	Units	Default
KKP		–	0
KP		–	0.0005
KRGL1		–	0
KUCRIT		–	0
KVTO		–	0
LA		–	1
LAMBDA		–	0.5
LB		–	1
LDIF		–	0
LDPHIEDGE		–	0
LDW		–	0
LETA		–	0.5
LETA0		–	0
LETA2		–	0
LGAM		–	1
LKKP		–	0
LKVTO		–	0
LL		–	0
LLN		–	1
LLODKKP		–	1
LLODKVTO		–	1
LNWR		–	0
LODKETAD		–	1
LODKGAMMA		–	1
LOV		–	2e-08
LOVIG		–	2e-08
LQWR		–	0
LR		–	5e-08
LVT		–	1
LWR		–	0
MJD		–	0.9
MJS		–	0.9
MJSWD		–	0.7
MJSWGD		–	0.7
MJSWGS		–	0.7

Table 2.100: EKV3 MOSFET Device Model Parameters

Parameter	Description	Units	Default
MJSWS		–	0.7
NO		–	1
NCS		–	1
NFVTA		–	0
NFVTB		–	10000
NJD		–	1
NJS		–	1
NJTSD		–	1
NJTSS		–	1
NJTSSWD		–	1
NJTSSWGD		–	1
NJTSSWGS		–	1
NJTSSWS		–	1
NLR		–	0.01
NQS_NOI		–	1
NWR		–	0.005
PBD		–	0.8
PBS		–	0.8
PBSWD		–	0.6
PBSWGD		–	0.6
PBSWGS		–	0.6
PBSWS		–	0.6
PDITS		–	0
PDITSD		–	1
PDITSL		–	0
PHIF	FERMI BULK POTENTIAL	–	0.45
PKKP		–	0
PKVTO		–	0
QLR		–	0.0005
QOFF		–	0
QWR		–	0.0003
RBN		–	0
RBWSH		–	0.003
RD		–	0
RDBN		–	0

Table 2.100: EKV3 MOSFET Device Model Parameters

Parameter	Description	Units	Default
RDBWSH		–	0.001
RDSBSH		–	1000
RDX		–	-1
RGSH		–	3
RINGTYPE		–	1
RLX	EXTERNAL SERIES RESISTANCE	–	-1
RS		–	0
RSBN		–	0
RSBWSH		–	0.001
RSH		–	0
RSX		–	-1
SAREF		–	0
SBREF		–	0
SCALE		–	1
SIGMAD		–	1
SIGN	SIGN = 1 FOR NMOS; SIGN = -1 FOR PMOS	–	1
TCJ		–	0
TCJSW		–	0
TCJSWG		–	0
TCV		–	0.0006
TCVL		–	0
TCVW		–	0
TCVWL		–	0
TE0EX		–	0.5
TE1EX		–	0.5
TETA		–	-0.0009
TG	TYPE OF GATE: -1 ENHANCEMENT TYPE; 1 DEPLETION TYPE	–	-1
TH_NOI		–	0
THC		–	0
TKKP		–	0
TLAMBDA		–	0
TNJTSD		–	0
TNJTSS		–	0
TNJTSSWD		–	0

Table 2.100: EKV3 MOSFET Device Model Parameters

Parameter	Description	Units	Default
TNJTSSWGD		–	0
TNJTSSWGS		–	0
TNJTSSWS		–	0
TNOM		–	27
TPB		–	0
TPBSW		–	0
TPBSWG		–	0
TR		–	0
TR2		–	0
UCEX		–	1.5
UCRIT		–	5e+06
VBI		–	0
VFBOV		–	0
VFR		–	0
VOV		–	1
VTO	THRESHOLD VOLTAGE	–	0.3
VTSD		–	0
VTSS		–	0
VTSSWD		–	0
VTSSWGD		–	0
VTSSWGS		–	0
VTSSWS		–	0
WDL		–	0
WDPHIEDGE		–	0
WE0		–	0
WE1		–	0
WEDGE		–	0
WETA		–	0.2
WETAD		–	0
WGAM		–	1
WKKP		–	0
WKP1		–	1e-06
WKP2		–	0
WKP3		–	1
WKVTO		–	0

Table 2.100: EKV3 MOSFET Device Model Parameters

Parameter	Description	Units	Default
WLAMBDA		–	0
WLDGAMMAEDGE		–	0
WLDPHIEDGE		–	0
WLOD		–	0
WLODKKP		–	1
WLODKVTO		–	1
WLR		–	0
WNLR		–	0
WQLR		–	0
WR		–	9e-08
WRLX		–	0
WUCEX		–	0
WUCRIT		–	0
WVT		–	1
XB		–	3.1
XJ		–	2e-08
XJBVD		–	0
XJBVS		–	0
XL		–	0
XTID		–	3
XTIS		–	3
XTSD		–	0
XTSS		–	0
XTSSWD		–	0
XTSSWGD		–	0
XTSSWGS		–	0
XTSSWS		–	0
XW		–	0
ZC		–	1e-06

2.3.20 Lossy Transmission Line (LTRA)

Symbol

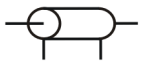

Instance Form

```
O<name> <A port (+) node> <A port (-) node>
+ <B port (+) node> <B port (-) node> [model name]
```

Model Form

```
.MODEL <model name> LTRA R=<value> L=<value> C=<value>
+ G=<value> LEN=<value> [model parameters]
```

Examples

```
Oline1 inp inn outp outn cable1
Oline2 inp inn outp outn cable1
```

Comments

The lossy transmission line, or LTRA, device is a two port (`A` and `B`), bi-directional device. The `(+)` and `(-)` nodes define the polarity of a positive voltage at a port.

`R`, `L`, `C`, and `G` are the resistance, inductance, capacitance, and conductance of the transmission line per unit length, respectively. `LEN` is the total length of the transmission line. Supported configurations for the LTRA are `RLC`, `RC`, `LC` (lossless) and `RG`.

Model Parameters

Table 2.101: Lossy Transmission Line Device Model Parameters

Parameter	Description	Units	Default
ABS	Abs. rate of change of deriv. for bkpt	–	1
C	Capacitance per unit length	F/m	0
COMPACTABS	special abstol for straight line checking	–	1e-12
COMPACTREL	special reltol for straight line checking	–	0.001
COMPLEXSTEPCONTROL	do complex time step control using local truncation error estimation	logical (T/F)	false
G	Conductance per unit length	Ω^{-1} m^{-1}	0
L	Inductance per unit length	Hm^{-1}	0
LEN	length of line	m	0
LININTERP	use linear interpolation	logical (T/F)	false
MIXEDINTERP	use linear interpolation if quadratic results look unacceptable	logical (T/F)	false

Table 2.101: Lossy Transmission Line Device Model Parameters

Parameter	Description	Units	Default
NOSTEPLIMIT	don't limit timestep size based on the time constant of the line	logical (T/F)	false
QUADINTERP	use quadratic interpolation	logical (T/F)	true
R	Resistance per unit length	Ω/m	0
REL	Rel. rate of change of deriv. for bkpt	–	1
STEPLIMIT	limit timestep size based on the time constant of the line	logical (T/F)	true
TRUNCDONTCUT	don't limit timestep to keep impulse response calculation errors low	logical (T/F)	false
TRUNCNR	use N-R iterations for step calculation in LTRAtrunc	logical (T/F)	false

By default time step limiting is on in the LTRA. This means that simulation step sizes will be reduced if required by the LTRA to preserve accuracy. This can be disabled by setting NOSTEPLIMIT=1 and TRUNCDONTCUT=1 on the .MODEL line.

The option most worth experimenting with for increasing the speed of simulation is REL. The default value of 1 is usually safe from the point of view of accuracy but occasionally increases computation time. A value greater than 2 eliminates all breakpoints and may be worth trying depending on the nature of the rest of the circuit, keeping in mind that it might not be safe from the viewpoint of accuracy. Breakpoints may be entirely eliminated if the circuit does not exhibit any sharp discontinuities. Values between 0 and 1 are usually not required but may be used for setting many breakpoints.

COMPACTREL and COMPACTABS are tolerances that control when the device should attempt to compact past history. This can significantly speed up the simulation, and reduce memory usage, but can negatively impact accuracy and in some cases may cause problems with the nonlinear solver. In general this capability should be used with linear type signals, such as square-wave-like voltages. In order to activate this capability the general device option TRYTOCOMPACT=1 must be set, if it is not no history compaction will be performed and the COMPACT options will be ignored.

Example:

```
.OPTIONS DEVICE TRYTOCOMPACT=1
```

References

See references [29] and [30] for more information about the model.

2.3.21 Voltage- or Current-controlled Switch

Instance Form

```
S<name> <(+) switch node> <(-) switch node>
+ <(+) control node> <(-) control node>
+ <model name> [ON] [OFF]

W<name> <(+) switch node> <(-) switch node>
+ <control node voltage source>
+ <model name> [ON] [OFF]
```

Model Form

```
.MODEL <model name> VSWITCH [model parameters]
.MODEL <model name> ISWITCH [model parameters]
```

Examples

```
S1 21 23 12 10 SMOD1
SSET 15 10 1 13 SRELAY
W1 1 2 VCLOCK SWITCHMOD1
W2 3 0 VRAMP SM1 ON
```

Comments

The voltage- or current-controlled switch is a particular type of controlled resistor. This model is designed to help reduce numerical issues. See Special considerations below.

The resistance between the `<(+) switch node>` and the `<(-) switch node>` is dependent on either the voltage between the `<(+) control node>` and the `<(-) control node>` or the current through the control node voltage source. The resistance changes in a continuous manner between the `RON` and `ROFF` model parameters.

No resistance is inserted between the control nodes. It is up to the user to make sure that these nodes are not floating.

Even though evaluating the switch model is computationally inexpensive, for transient analysis **Xyce** steps through the transition section using small time-steps in order to calculate the waveform accurately. Thus, a circuit with many switch transitions can result in lengthy run times.

The ON and OFF parameters are used to specify the initial state of the switch at the first step of the operating point calculation; this does not force the switch to be in that state, it only gives the operating point solver an initial state to work with. If it is known that the switch should be in a particular state in the operating point it could help convergence to specify one of these keywords.

The power dissipated in the switch is calculated with $I \cdot \Delta V$ where the voltage drop is calculated as $(V_+ - V_-)$ and positive current flows from V_+ to V_-. This will essentially be the power dissipated in either `RON` or `ROFF`, since the switch is a particular type of controlled resistor.

Model Parameters

Table 2.102: Controlled Switch Device Model Parameters

Parameter	Description	Units	Default
IOFF	Off current	A	0
ION	On current	A	0.001
OFF	Off control value	–	0
ON	On control value	–	1
ROFF	Off resistance	Ω	1e+06
RON	On resistance	Ω	1
VOFF	Off voltage	V	0
VON	On voltage	V	1

Special Considerations

- Due to numerical limitations, **Xyce** can only manage a dynamic range of approximately 12 decades. Thus, it is recommended the user limit the ratio $\mathbf{ROFF}/\mathbf{RON}$ to less than 10^{12}. This soft limitation is not enforced by the code, and larger ratios might converge for some problems.

- Do not set $\mathbf{RON}$ to 0.0, as the code computes the "on" conductance as the inverse of $\mathbf{RON}$. Using 0.0 will cause the simulation to fail when this invalid division results in an infinite conductance. Use a very small, but non-zero, on resistance instead.

- Furthermore, it is a good idea to limit the narrowness of the transition region. This is because in the transition region, the switch has gain and the narrower the region, the higher the gain and the more potential for numerical problems. The smallest value recommended for $\|\mathbf{VON} - \mathbf{VOFF}\|$ or $\|\mathbf{ION} - \mathbf{IOFF}\|$ is 1×10^{-12}. This recommendation is not a restriction, and you might find for some problems that narrower transition regions might work well.

Controlled switch equations

The equations in this section use the following variables:

$$
\begin{aligned}
R_s &= \text{switch resistance} \\
V_c &= \text{voltage across control nodes} \\
I_c &= \text{current through control node voltage source} \\
L_m &= \text{log-mean of resistor values} &&= \ln\left(\sqrt{\mathbf{RON} \cdot \mathbf{ROFF}}\right) \\
L_r &= \text{log - ratio of resistor values} &&= \ln\left(\mathbf{RON}/\mathbf{ROFF}\right) \\
V_d &= \text{difference of control voltages} &&= \mathbf{VON} - \mathbf{VOFF} \\
I_d &= \text{difference of control currents} &&= \mathbf{ION} - \mathbf{IOFF}
\end{aligned}
$$

Switch Resistance

To compute the switch resistance, **Xyce** first calculates the "switch state" S as $S = (V_c - \mathbf{VOFF})/V_d$ or $S = (I_c - \mathbf{IOFF})/I_d$. The switch resistance is then:

$$R_s = \begin{cases} \mathbf{RON}, & S \geq 1.0 \\ \mathbf{ROFF}, & S \leq 0.0 \\ \exp\left(L_m + 0.75L_r(2S-1) - 0.25L_r(2S-1)^3\right), & 0 < S < 1 \end{cases}$$

2.3.22 Generic Switch

Instance Form

```
SW<name> <(+) switch node> <(-) switch node> <model name> [ON] [OFF]
<control =  expression >
```

Model Form

```
.MODEL <model name> VSWITCH [model parameters]
.MODEL <model name> ISWITCH [model parameters]
.MODEL <model name> SWITCH [model parameters]
```

Examples

```
SW 1 2 SWI OFF CONTROL={I(VMON)}
SW 1 2 SWV OFF CONTROL={V(3)-V(4)}
SW 1 2 SW OFF CONTROL={if(time>0.001,1,0)}
```

Comments

The generic switch is similar to the voltage- or current-controlled switch except that the control variable is anything that can be writen as an expression. The examples show how a voltage- or current-controlled switch can be implemented with the generic switch. Also shown is a relay that turns on when a certain time is reached. Model parameters are given in Table 2.102.

The power dissipated in the generic switch is calculated with $I \cdot \Delta V$ where the voltage drop is calculated as $(V_+ - V_-)$ and positive current flows from V_+ to V_-. This will essentially be the power dissipated in either `RON` or `ROFF`, since the generic switch is a particular type of controlled resistor.

2.3.23 Lossless (Ideal) Transmission Line

Symbol

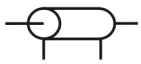

Instance Form

```
T<name> <port 1 (+) node> <port 1 (-) node>
+ <port 2 (+) node> <port 2 (-) node>
+ Z0=<value> [TD=<value>] [F=<value> [NL=<value>]]
```

Examples

```
Tline inp inn outp outn Z0=50 TD=1us
Tline2 inp inn outp outn Z0=50 F=1meg NL=1.0
```

Comments

The lossless transmission line device is a two port (`A` and `B`), bi-directional delay line. The `(+)` and `(-)` nodes define the polarity of a positive voltage at a port.

`Z0` is the characteristic impedance. For user convenience, `ZO` ("Zee Oh") is an allowed synonym for `Z0` ("Zee Zero").

The transmission line's length is specified by either `TD` (a delay in seconds) or by the combination of `F` and `NL` (a frequency in Hz and the relative wavelength at `F`). `NL` defaults to 0.25 (`F` is the quarter-wave frequency). If `F` is given, the time delay is computed as $\frac{NL}{F}$.

While both `TD` and `F` are optional, at least one of them must be given. It is an instance line error if both are given.

Lead currents for the two terminals (1 and 2) of the lossless transmission device (e.g.,for the T device `line2`) are accessed via `I1(Tline2)` and `I2(Tline2)`. The polarity conventions are that positive current flows into the positive node of the specified terminal, and negative current flows out of the positive node of the specified terminal.

Power for the lossless transmission line is calculated as $I_1 \cdot \Delta V_1 + I_2 \cdot \Delta V_2$, where the voltage drops (ΔV_1 and ΔV_2) are the voltage drops between the positive and negative terminals of each port (e.g., $\Delta V = (V_+ - V_-)$). The sign conventions for the lead currents I_1 and I_2 were given in the previous paragraph. This definition can be viewed as the instantaneous sum of the power flowing into terminal 1 and the power flowing into terminal 2. This definition for power for the lossless transmission line may differ from commercial simulators, such as HSpice.

Instance Parameters

Table 2.103: Ideal Transmission Line Device Instance Parameters

Parameter	Description	Units	Default
`F`	Frequency	Hz	0

Table 2.103: Ideal Transmission Line Device Instance Parameters

Parameter	Description	Units	Default
NL	Length in wavelengths	–	0.25
TD	Time delay	s	0
Z0	Characteristic Impedance	Ω	0
ZO	Characteristic Impedance	Ω	0

2.3.24 Lumped Transmission Line

Symbol

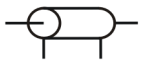

Instance Form

```
ytransline <name> <Input port> <Output port> testLine
+ len=<value> lumps=<value>
```

Model Form

```
.model testLine transline r=<value> l=<value>
+ c=<value> [model parameters]
```

Examples

```
ytransline line1 inn out  testLine len=12.0 lumps=1440
```

Comments

The lumped transmission line, device is a two port bi-directional device. The specification is patterned, loosely, from the netlist specification for the LTRA device.

`R`, `L`, and `C` are the resistance, inductance, and capacitance of the transmission line per unit length, respectively. `LEN` is the total length of the transmission line, and `LUMPS` is the number of lumped elements used to discretize the line. Supported configurations for this device are `RLC` and `LC`.

Unlike the LTRA device, which is based on an analytic solution, this device is based on assembling chains of linear R,L and C devices to approximate the solution to the Telegraph equations. It is the functional equivalent of building a transmission line in the netlist using subcircuits of linear elements. The advantage of using this approach is that it automates the mechanics of this process, and thus is less prone to error. It can be used with all analysis types, including harmonic balance (HB).

The model is based on the assumption that the segments of the line are evenly spaced. The number of segments is specified by the parameter `LUMPS` and the larger this number, the more accurate the calculation.

Device Parameters

Table 2.104: Lumped Transmission Line Device Instance Parameters

Parameter	Description	Units	Default
`LEN`	length of line	m	0
`LUMPS`		–	1

Model Parameters

Table 2.105: Lumped Transmission Line Device Model Parameters

Parameter	Description	Units	Default
C	Capacitance per unit length	F/m	0
ELEV		–	2
G	Conductance per unit length	Ω^{-1} m^{-1}	0
L	Inductance per unit length	Hm^{-1}	0
R	Resistance per unit length	Ω/m	0

2.3.25 Behavioral Digital Devices

Instance Form

```
U<name> <type>(<num inputs>) [digital power node]
+ [digital ground node] <input node>* <output node>*
+ <model name> [device parameters]
```

Model Form

```
.MODEL <model name> DIG [model parameters]
```

Examples

```
UMYAND AND(2) DPWR DGND in1 in2 out DMOD IC=TRUE
UTHEINV INV DPWR DGND in out DMOD
.model DMOD DIG (
+ CLO=1e-12  CHI=1e-12
+ S0RLO=5  S0RHI=5  S0TSW=5e-9
+ S0VLO=-1  S0VHI=1.8
+ S1RLO=200  S1RHI=5  S1TSW=5e-9
+ S1VLO=1  S1VHI=3
+ RLOAD=1000
+ CLOAD=1e-12
+ DELAY=20ns )
```

Parameters and Options

`type`

Type of digital device. Supported devices are: INV, BUF, AND, NAND, OR, NOR, XOR, NXOR, DFF, JKFF, TFF, DLTCH and ADD. (Note: NOT is an allowed synonym for INV, but will be deprecated in future **Xyce** releases.)

The following gates have a fixed number of inputs. INV and BUF have only one input and one output node. XOR and NXOR have two inputs and one output. ADD has three inputs (in1, in2, carryIn) and two outputs (sumOut and carryOut). DFF has four inputs (PREB, CLRB, Clock and Data) and two outputs (Q and $\bar{Q}$). TFF has two inputs (T and CLK) and two outputs (Q and $\bar{Q}$). The TFF uses "positive" ("rising") edge clocking. The JKFF has five inputs (PREB, CLRB, Clock, J and K) and two outputs (Q and $\bar{Q}$). The JKFF uses "negative" ("falling") edge clocking. DLTCH has four inputs (PREB, CLRB, Enable and Data) and two outputs (Q and $\bar{Q}$).

The AND, NAND, OR and NOR gates have one output but a variable number of inputs. There is no limit on the number of inputs for AND, NAND, OR and NOR gates, but there must be at least two inputs.

`num inputs`

For AND, NAND, OR and NOR gates, with N inputs, the syntax is (N), as shown for the MYAND example given above, where AND(2) is specified. The inclusion of (N) is mandatory for gates with a variable

number of inputs, and both the left and right parentheses must be used to enclose N.

This parameter is optional, and typically omitted, for gates with a fixed number of inputs, such as INV, BUF, XOR, NXOR, DFF, JKFF, TFF, DLTCH and ADD. This is illustrated by the THEINV example given above, where the device type is INV rather than INV(1).

`digital power node`
: Dominant node to be connected to the output node(s) to establish high output state. This node is connected to the output by a resistor and capacitor in parallel, whose values are set by the model. This node must be specified on the instance line.

`digital ground node`
: This node serves two purposes, and must be specified on the instance line. It is the dominant node to be connected to the output node(s) to establish low output state. This node is connected to the output by a resistor and capacitor in parallel, whose values are set by the model. This node is also connected to the input node by a resistor and capacitor in parallel, whose values are set by the model. Determination of the input state is based on the voltage drop between the input node and this node.

`input nodes, output nodes`
: Input and output nodes that connect to the circuit.

`model name`
: Name of the model defined in a .MODEL line.

`device parameters`
: Parameter listed in Table 2.106 may be provided as `<parameter>=<value>` specifications as needed. For devices with more than one output, multiple output initial states may be provided as Boolean values in either a comma separated list (e.g. IC=TRUE,FALSE for a device with two outputs) or individually (e.g. IC1=TRUE IC2=FALSE or IC2=FALSE). Finally, the IC specification must use TRUE and FALSE rather than T and F.

Device Parameters

Table 2.106: Behavioral Digital Device Instance Parameters

Parameter	Description	Units	Default
IC1	Vector of initial values for output(s)	logical (T/F)	false
IC2		–	false

Model Parameters

Table 2.107: Behavioral Digital Device Model Parameters

Parameter	Description	Units	Default
CHI	Capacitance between output node and high reference	F	1e-06
CLO	Capacitance between output node and low reference	F	1e-06
CLOAD	Capacitance between input node and input reference	F	1e-06
DELAY	Delay time of device	s	1e-08
RLOAD	Resistance between input node and input reference	Ω	1000
S0RHI	Low state resitance between output node and high reference	Ω	100
S0RLO	Low state resistance between output node and low reference	Ω	100
S0TSW	Switching time transition to low state	s	1e-08
S0VHI	Maximum voltage to switch to low state	V	1.7
S0VLO	Minimum voltage to switch to low state	V	-1.5
S1RHI	High state resistance between output node and high reference	Ω	100
S1RLO	High state resistance between output node and low reference	Ω	100
S1TSW	Switching time transition to high state	s	1e-08
S1VHI	Maximum voltage to switch to high state	V	7
S1VLO	Minimum voltage to switch to high state	V	0.9

Model Description

The input interface model consists of the input node connected with a resistor and capacitor in parallel to the digital ground node. The values of these are: **RLOAD** and **CLOAD**.

The logical state of any input node is determined by comparing the voltage relative to the reference to the range for the low and high state. The range for the low state is **S0VLO** to **S0VHI**. Similarly, the range for the high state is **S1VLO** to **S1VHI**. The state of an input node will remain fixed as long as its voltage stays within the range for its current state. That input node will transition to the other state only when its state goes outside the voltage range of its current state.

The output interface model is more complex than the input model, but shares the same basic configuration of a resistor and capacitor in parallel to simulate loading. For the output case, there are such parallel RC connections to two nodes, the digital ground node and the digital power node. Both of these nodes must be specified on the instance line.

The capacitance to the high node is specified by **CHI**, and the capacitance to the low node is **CLO**. The resistors in parallel with these capacitors are variable, and have values that depend

on the state. In the low state (S0), the resistance values are: **S0RLO** and **S0RHI**. In the high state (S1) ,the resistance values are: **S1RLO** and **S1RHI**. Transition to the high state occurs exponentially over a time of **S1TSW**, and to the low state **S0TSW**.

The device's delay is given by the model parameter **DELAY**. Any input changes that affect the device's outputs are propagated after this delay.

As a note, the model parameters **VREF**, **VLO** and **VHI** are used by the now deprecated Y-type digital device, but are ignored by the U device. A warning message is emitted if any of these three parameters are used in the model card for a U device.

Another caveat is that closely spaced input transitions to the **Xyce** digital behavioral models may not be accurately reflected in the output states. In particular, input-state changes spaced by more than `DELAY` seconds have independent effects on the output states. However, two input-state changes (S1 and S2) that occur within `DELAY` seconds (e.g., at time=t1 and time=t1+0.5*`DELAY`) have the effect of masking the effects of S1 on the device's output states, and only the effects of S2 are propagated to the device's output states.

DCOP Calculations for Flip-Flops and Latches

The behavior of the digital devices during the DC Operating Point (DCOP) calculations can be controlled via the `IC1` and `IC2` instance parameters and the `DIGINITSTATE` device option. See 2.1.18 for more details on the syntax for device options. Also, this section applies to the Y-Type Behavioral Digital Devices discussed in 2.3.26.

The `IC1` instance parameter is supported for all gate types. The `IC2` instance parameter is supported for all gate types that have two outputs. These instance parameters allow the outputs of individual gates to be set to known states (either `TRUE (1)` or `FALSE (0)`) during the DCOP calculation, irregardless of their input state(s). There are two caveats. First, the `IC1` and `IC2` settings at a given gate will override the global effects of the `DIGINITSTATE` option, discussed below, at that gate. Second, `IC1` and `IC2` do not support the `X`, or "undetermined", state discussed below.

The `DIGINITSTATE` option only applies to the DLTCH, DFF, JKFF and TFF devices. It was added for improved compatibility with PSpice. It sets the initial state of all flip-flops and latches in the circuit: 0=clear, 1=set, 2=`X`. At present, the use of the `DIGINITSTATE` option during the DCOP is the only place that **Xyce** supports the `X`, or "undetermined", state. The `X` state is modeled in **Xyce** by having the DLTCH, DFF, JKFF and TFF outputs simultaneously "pulled-up" and "pulled-down". That approach typically produces an output level, for the `X` state, that is approximately halfway between the voltage levels for `TRUE` and `FALSE` (e.g., halfway between `V_HI` and `V_LO`). As mentioned above, the `IC1` and `IC2` instance parameters take precedence at a given gate.

Xyce also supports a default `DIGINITSTATE`, whose value is 3. For this default value, for the DFF, JKFF, TFF and DLTCH devices, **Xyce** enforces Q and $\bar{Q}$ being different at DCOP, if both `PREB` and `CLRB` are `TRUE` . The behavior of the DFF, JKFF and DLTCH devices at the DCOP for `DIGINITSTATE=3` is shown in Tables 2.108, 2.110 and 2.109. In these three tables, the X state denotes the "Don't Care" condition, where the input state can be 0, 1 or the "undetermined" state. The first row in each truth-table (annotated with $*$) is "unstable", and will change to a state with Q and $\bar{Q}$ being different once both `PREB` and `CLRB` are not both in the `FALSE` state.

The behavior of the TFF device at the DCOP, for the default `DIGINITSTATE` of 3, is simpler, and is not shown as a table. The design decision was to have Q and $\bar{Q}$ be different, with the Q value equal to the state of the T input.

Table 2.108: DFF Truth-Table for DIGINITSTATE=3

PREB	CLRB	CLOCK	DATA	Q	$\bar{Q}$ (Qbar)
0	0	X	X	1*	1*
0	1	X	X	1	0
1	0	X	X	0	1
1	1	X	0	0	1
1	1	X	1	1	0

Table 2.109: DLTCH Truth-Table for DIGINITSTATE=3

PREB	CLRB	ENABLE	DATA	Q	$\bar{Q}$ (Qbar)
0	0	X	X	1*	1*
0	1	X	X	1	0
1	0	X	X	0	1
1	1	X	0	0	1
1	1	X	1	1	0

Table 2.110: JKFF Truth-Table for DIGINITSTATE=3

PREB	CLRB	CLOCK	J	K	Q	$\bar{Q}$ (Qbar)
0	0	X	X	X	1*	1*
0	1	X	X	X	1	0
1	0	X	X	X	0	1
1	1	X	0	X	0	1
1	1	X	1	X	1	0

2.3.26 Y-Type Behavioral Digital Devices (Deprecated)

Instance Form

```
Y<type> <name> [low output node] [high output node]
+ [input reference node] <input node>* <output node>*
+  <model name> [device parameters]
```

Model Form

```
.MODEL <model name> DIG [model parameters]
```

Examples

```
YAND MYAND in1 in2 out DMOD IC=TRUE
YNOT THENOT in out DMOD
YNOR ANOR2 vlo vhi vref in1 in2 out DDEF
.model DMOD DIG (
+ CLO=1e-12  CHI=1e-12
+ S0RLO=5  S0RHI=5  S0TSW=5e-9
+ S0VLO=-1  S0VHI=1.8
+ S1RLO=200  S1RHI=5  S1TSW=5e-9
+ S1VLO=1  S1VHI=3
+ RLOAD=1000
+ CLOAD=1e-12
+ VREF=0 VLO=0 VHI=3
+ DELAY=20ns )
.MODEL DDEF DIG
```

Parameters and Options

`type`

Type of digital device. Supported devices are: NOT, BUF, AND, NAND, OR, NOR, XOR, NXOR, DFF, JKFF, TFF, DLTCH and ADD. (Note: INV is now the preferred synonym for NOT. The NOT device type will be deprecated in future **Xyce** releases.) For Y-type digital devices, all devices have two input nodes and one output node, except for NOT, DFF and ADD. NOT has one input and one output. ADD has three inputs (in1, in2, carryIn) and two outputs (sumOut and carryOut). DFF has four inputs (PREB, CLRB, Clock and Data) and two outputs (Q and $\bar{Q}$). TFF has two inputs (T and Clock) and two outputs (Q and $\bar{Q}$). The TFF uses "positive" ("rising") edge clocking. The JKFF has five inputs (PREB, CLRB, Clock, J and K) and two outputs (Q and $\bar{Q}$). The JKFF uses "negative" ("falling") edge clocking. DLTCH has four inputs (PREB, CLRB, Enable and Data) and two outputs (Q and $\bar{Q}$).

`name`

Name of the device instance. This must be present, and when combined with the `Y<type>`, must be unique in the netlist. In the examples, MYAND, THENOT and ANOR2 have been used as names for the three devices.

`low output node`
: Dominant node to be connected to the output node(s) to establish low output state. This node is connected to the output by a resistor and capacitor in parallel, whose values are set by the model. If specified by the model, this node must be omitted from the instance line and a fixed voltage **VLO** is used instead.

`high output node`
: Dominant node to be connected to the output node(s) to establish high output state. This node is connected to the output by a resistor and capacitor in parallel, whose values are set by the model. If specified by the model, this node must be omitted from the instance line and a fixed voltage **VHI** is used instead.

`input reference node`
: This node is connected to the input node by a resistor and capacitor in parallel, whose values are set by the model. Determination if the input state is based on the voltge drop between the input node and this node. If specified by the model, this node must be omitted from the instance line and a fixed voltage **VREF** is used instead.

`input nodes, output nodes`
: Nodes that connect to the circuit.

`model name`
: Name of the model defined in a .MODEL line.

`device parameters`
: Parameter listed in Table 2.111 may be provided as `<parameter>=<value>` specifications as needed. For devices with more than one output, multiple output initial states may be provided as Boolean values in either a comma separated list (e.g. IC=TRUE,FALSE for a device with two outputs) or individually (e.g. IC1=TRUE IC2=FALSE or IC2=FALSE). Finally, the IC specification must use TRUE and FALSE rather than T and F.

Device Parameters

Table 2.111: Behavioral Digital Device Instance Parameters

Parameter	Description	Units	Default
IC1	Vector of initial values for output(s)	logical (T/F)	false
IC2		–	false

Model Parameters

Table 2.112: Behavioral Digital Device Model Parameters

Parameter	Description	Units	Default
CHI	Capacitance between output node and high reference	F	1e-06
CLO	Capacitance between output node and low reference	F	1e-06
CLOAD	Capacitance between input node and input reference	F	1e-06
DELAY	Delay time of device	s	1e-08
RLOAD	Resistance between input node and input reference	Ω	1000
S0RHI	Low state resitance between output node and high reference	Ω	100
S0RLO	Low state resistance between output node and low reference	Ω	100
S0TSW	Switching time transition to low state	s	1e-08
S0VHI	Maximum voltage to switch to low state	V	1.7
S0VLO	Minimum voltage to switch to low state	V	-1.5
S1RHI	High state resistance between output node and high reference	Ω	100
S1RLO	High state resistance between output node and low reference	Ω	100
S1TSW	Switching time transition to high state	s	1e-08
S1VHI	Maximum voltage to switch to high state	V	7
S1VLO	Minimum voltage to switch to high state	V	0.9
VHI	Internal high state supply voltage	V	0
VLO	Internal low state supply voltage	V	0
VREF	Internal reference voltage for inputs	V	0

Model Description

The input interface model consists of the input node connected with a resistor and capacitor in parallel to the digital ground node. The values of these are: **RLOAD** and **CLOAD**.

The logical state of any input node is determined by comparing the voltage relative to the reference to the range for the low and high state. The range for the low state is **S0VLO** to **S0VHI**. Similarly, the range for the high state is **S1VLO** to **S1VHI**. The state of an input node will remain fixed as long as its voltage stays within the voltage range for its current state. That input node will transition to the other state only when its state goes outside the range of its current state.

The output interface model is more complex than the input model, but shares the same basic configuration of a resistor and capacitor in parallel to simulate loading. For the output case, there are such connections to two nodes, the digital ground node and the digital power node. Both of

these nodes must be specified on the instance line.

The capacitance to the high node is specified by **CHI**, and the capacitance to the low node is **CLO**. The resistors in parallel with these capacitors are variable, and have values that depend on the state. In the low state (S0), the resistance values are: **S0RLO** and **S0RHI**. In the high state (S1) ,the resistance values are: **S1RLO** and **S1RHI**. Transition to the high state occurs exponentially over a time of **S1TSW**, and to the low state **S0TSW**.

The device's delay is given by the model parameter **DELAY**. Any input changes that affect the device's outputs are propagated after this delay.

Another caveat is that closely spaced input transitions to the **Xyce** digital behavioral models may not be accurately reflected in the output states. In particular, input-state changes spaced by more than `DELAY` seconds have independent effects on the output states. However, two input-state changes (S1 and S2) that occur within `DELAY` seconds (e.g., at time=t1 and time=t1+0.5*`DELAY`) have the effect of masking the effects of S1 on the device's output states, and only the effects of S2 are propagated to the device's output states.

DCOP Calculations for Flip-Flops and Latches

The behavior of the digital devices during the DC Operating Point (DCOP) calculations can be controlled via the `IC1` and `IC2` instance parameters and the `DIGINITSTATE` device option. See 2.3.25 and 2.1.18 for more details on these instance parameters and device option.

Converting Y-Type Digital Devices to U-Type Digital Devices

Xyce is migrating the digital behavioral devices to U devices. The goal is increased compatibility with PSpice netlists. This subsection gives four examples of how to convert an existing **Xyce** netlist using Y-type digital devices to the corresponding U device syntaxes. The conversion process depends on whether the device has a fixed number of inputs or a variable number of inputs. In all cases, the the model parameters **VREF**, **VLO** and **VHI** should be omitted from the U device model card. For U devices, the nodes **vlo** and **vhi** are always specified on the instance line.

Example 1: Fixed number of inputs, Y-device model card contains **VREF**, **VLO** and **VHI**. Assume **VREF**=**VLO**.

```
YNOT THENOT in out DMOD
.model DMOD DIG (
+ CLO=1e-12  CHI=1e-12
+ S0RLO=5  S0RHI=5  S0TSW=5e-9
+ S0VLO=-1  S0VHI=1.8
+ S1RLO=200  S1RHI=5  S1TSW=5e-9
+ S1VLO=1  S1VHI=3
+ RLOAD=1000
+ CLOAD=1e-12
+ VREF=0 VLO=0 VHI=3
+ DELAY=20ns )
```

```
* Digital power node.  Assume digital ground node = GND
V1 DPWR 0 3V
UTHENOT INV DPWR 0 in out DMOD1
.model DMOD1 DIG (
+ CLO=1e-12  CHI=1e-12
+ S0RLO=5  S0RHI=5  S0TSW=5e-9
+ S0VLO=-1  S0VHI=1.8
+ S1RLO=200  S1RHI=5  S1TSW=5e-9
+ S1VLO=1  S1VHI=3
+ RLOAD=1000
+ CLOAD=1e-12
+ DELAY=20ns )
```

Example 2: Fixed number of inputs, Y-device instance line contains **vlo**, **vhi** and **vref**. Assume **vref=vlo**.

```
YNOT THENOT vlo vhi vref in out DMOD1
UTHENOT INV vhi vlo in out DMOD1
```

Example 3: Variable number of inputs, Y-device model card contains **VREF**, **VLO** and **VHI**. Assume **VREF=VLO**.

```
YAND MYAND in1 in2 out DMOD
UMYAND AND(2) DPWR 0 in1 in2 out DMOD1
```

Example 4: Variable number of inputs, Y-device instance line contains **vlo**, **vhi** and **vref**. Assume **vref=vlo**.

```
YAND MYAND vlo vhi vref in1 in2 out DMOD1
UMYAND AND(2) vhi vlo in1 in2 out DMOD1
```

2.3.27 Accelerated mass

Simulation of electromechanical devices or magnetically driven machines may require that **Xyce** simulate the movement of an accelerated mass, that is, to solve the second order initial value problem

$$\begin{aligned} \frac{d^2x}{dt} &= a(t) \\ x(0) &= x_0 \\ \dot{x}_0 &= v_0 \end{aligned}$$

where x is the position of the object, $\dot{x}$ its velocity, and $a(t)$ the acceleration. In **Xyce**, this simulation capability is provided by the accelerated mass device.

Instance Form

```
YACC <name> <acceleration node> <velocity node> <position node>
+ [v0=<initial velocity>] [x0=<initial position>]
```

Examples

```
* Simulate a projectile thrown upward against gravity
V1 acc 0 -9.8
R1 acc 0 1
YACC acc1 acc vel pos v0=10 x0=0
.print tran v(pos)
.tran 1u 10s
.end

* Simulate a damped, forced harmonic oscillator
* assuming K, c, mass, amplitude and frequency
* are defined in .param statements
B1 acc 0 V={(-K * v(pos) - c*v(vel))/mass
+            + amplitude*sin(frequency*TIME)}
R1 acc 0 1
YACC acc2 acc vel pos v0=0 x0=0.4
.print tran v(pos)
.tran 1u 10s
.end
```

Comments

When used as in the examples, **Xyce** will emit warning messages about the `pos` and `vel` nodes not having a DC path to ground. This is normal and should be ignored. The position and velocity nodes should not be connected to any real circuit elements. Their values may, however, be used in behavioral sources; this is done in the second example.

2.3.28 Power Grid

The Power Grid devices are a family of device models that can be used to model steady-state power flow in electric power grids. They include device models for branches, bus shunts, transformers and generator buses.

Power flow in electric power grids can be modeled as a complex-valued voltage-current problem with standard admittance-matrix techinques. This approach solves the system of equations $I = YV$, and is termed `IV` format in this document. However, it is more typically modeled as a power-flow problem that solves the system of equations $S = P + jQ = VI^*$, where S is the complex power flow, V and I are complex-valued quantities, and I^* is the complex conjugate of I. The complex power flow can then be solved in either rectangular or polar coordinates. These two solution formats are termed PQ Rectangular (aka, `PQR` format) and PQ Polar (aka, `PQP` format) in this document. The variables for each solution format are described in more detail in the device descriptions given below.

In all three formulations,an Equivalent Real Formulation (ERF) [31] must be used for compatibility with the existing solver libraries in **Xyce**. More details on these equations are given below after the individual device descriptions.

PowerGridBranch

Instance Form

```
Y<type> <name> <input node1> <output node1>
+ <input node2> <output node2> [device parameters]
```

Examples

```
YPowerGridBranch pg1_2 VR1 VR2 VI1 VI2 AT=IV R=0.05 B=0.1 X=0.05
YPGBR pg1_2a VR1 VR2 VI1 VI2 AT=IV R=0.05 B=0.1 X=0.05
YPowerGridBranch pg1_2b VR1 VR2 VI1 VI2 AT=PQR R=0.05 B=0.1 X=0.05
YPGBR pg1_2c VR1 VR2 VI1 VI2 AT=PQR R=0.05 B=0.1 X=0.05
YPowerGridBranch pg1_2d Th1 Th2 VM1 VM2 AT=PQP R=0.05 B=0.1 X=0.05
YPGBR pg1_2e Th1 Th2 VM1 VM2 AT=PQP R=0.05 B=0.1 X=0.05
```

Parameters and Options

`type`
: The device type has a verbose (`PowerBranchBranch`) and a shortened (`PGBR`) form. Their usage may be mixed within a netlist.

`name`
: Name of the device instance. This must be present, and unique amongst the `PowerGridBranch` devices in the netlist.

`input node`
: There are two input nodes, `<input node1>` and `<input node2>`, whose definitions depend on the AnalysisType (`AT`) specified. Both nodes must be specified. This device can be viewed as a generalized 4-port resistor, using the Equivalent Real Form (ERF) described below in the

equation subsections. For IV and PQR formats, <input node1> is the real part (VR) of the voltage at terminal 1 while <input node2> is the imaginary part (VI) of the voltage at terminal 1. For PQP format, <input node1> is the angle (Θ or Th) of the voltage at terminal 1 while <input node2> is the magnitude (VM or $|V|$) of the voltage at terminal 1. Finally, by analogy to other **Xyce** devices, node 1 can be considered as the positive terminal for this device, while node 2 is the negative terminal.

output node
: There are two output nodes, <output node1> and <output node2>, whose definitions depend on the AnalysisType (AT) specified. Both nodes must be specified. This device can be viewed as a generalized 4-port resistor, using the ERF described below in the equation subsections. For IV and PQR formats, <output node1> is the real part (VR) of the voltage at terminal 2 while <output node2> is the imaginary part (VI) of the voltage at terminal 2. For PQP format, <output node1> is the angle (Θ or Th) of the voltage at terminal 2 while <output node2> is the magnitude (VM or $|V|$) of the voltage at terminal 2. Finally, by analogy to other **Xyce** devices, node 2 can be considered as the negative terminal for this device, while node 1 is the positive terminal.

AT
: This device supports all three analysis types (AT), namely IV, PQR and PQP. The equations for these analysis types are described below. All power grid devices, of all types, in a **Xyce** netlist must use the same analysis type. This constraint is not checked during netlist parsing. Violation of this constraint may cause unpredictable results.

B
: Branch susceptance, given in per unit. As discussed in the Equation section below, the susceptance value given on the branch description lines in IEEE Common Data Format (CDF) files is split equally between terminals 1 and 2.

R
: Branch resistance, given in per unit.

X
: Branch reactance, given in per unit.

PowerGridBranch Device Parameters

Table 2.113: PowerGridBranch Device Instance Parameters

Parameter	Description	Units	Default
AT	Analysis Type	–	'PQP'
B	Branch Shunt Susceptance	per unit	0
R	Branch Resistance	per unit	0
X	Branch Reactance	per unit	0

PowerGridBusShunt

Instance Form

```
Y<type> <name> <input node1> <output node1>
+ <input node2> <output node2 [device parameters]
```

Examples

```
YPowerGridBusShunt pg1_2 VR1 VR2 VI1 VI2 AT=IV R=0.05 B=0.1 X=0.05
YPGBS pg1_2a VR1 VR2 VI1 VI2 AT=IV R=0.05 B=0.1 X=0.05
YPowerGridBusShunt pg1_2b VR1 VR2 VI1 VI2 AT=PQR R=0.05 B=0.1 X=0.05
YPGBS pg1_2c VR1 VR2 VI1 VI2 AT=PQR R=0.05 B=0.1 X=0.05
YPowerGridBusShunt pg1_2d Th1 Th2 VM1 VM2 AT=PQP R=0.05 B=0.1 X=0.05
YPGBS pg1_2e Th1 Th2 VM1 VM2 AT=PQP R=0.05 B=0.1 X=0.0
```

Parameters and Options

`type`

The device type has a verbose (`PowerGridBusShunt`) and a shortened (`PGBS`) form. Their usage may be mixed within a netlist.

`name`

Name of the device instance. This must be present, and unique amongst the `PowerGridBusShunt` devices in the netlist.

`input node`

There are two input nodes, `<input node1>` and `<input node2>`, whose definitions depend on the AnalysisType (`AT`) specified. Both nodes must be specified. This device can be viewed as a generalized 4-port resistor, using the Equivalent Real Form (ERF) described below in the equation subsections. For `IV` and `PQR` formats, `<input node1>` is the real part (`VR`) of the voltage at terminal 1 while `<input node2>` is the imaginary part (`VI`) of the voltage at terminal 1. For `PQP` format, `<input node1>` is the angle (Θ or `Th`) of the voltage at terminal 1 while `<input node2>` is the magnitude (`VM` or $|V|$) of the voltage at terminal 1. Finally, by analogy to other **Xyce** devices, node 1 can be considered as the positive terminal for this device, while node 2 is the negative terminal.

`output node`

There are two output nodes, `<output node1>` and `<output node2>`, whose definitions depend on the AnalysisType (`AT`) specified. Both nodes must be specified. This device can be viewed as a generalized 4-port resistor, using the ERF described below in the equation subsections. For `IV` and `PQR` formats, `<output node1>` is the real part (`VR`) of the voltage at terminal 2 while `<output node2>` is the imaginary part (`VI`) of the voltage at terminal 2. For `PQP` format, `<output node1>` is the angle (Θ or `Th`) of the voltage at terminal 2 while `<output node2>` is the magnitude (`VM` or $|V|$) of the voltage at terminal 2. Finally, by analogy to other **Xyce** devices, node 2 can be considered as the negative terminal for this device, while node 1 is the positive terminal.

`AT` This device supports all three analysis types (`AT`), namely `IV`, `PQR` and `PQP`. The equations for these analysis types are described below. All

power grid devices, of all types, in a **Xyce** netlist must use the same analysis type. This constraint is not checked during netlist parsing. Violation of this constraint may cause unpredictable results.

`B` Shunt susceptance, given in per unit.

`G` Shunt conductance, given in per unit.

Bus Shunt Device Parameters

Table 2.114: PowerGridBusShunt Device Instance Parameters

Parameter	Description	Units	Default
`AT`	Analysis Type	–	'PQP'
`B`	Shunt Susceptance	per unit	0
`G`	Shunt Conductance	per unit	0

PowerGridTransformer

Instance Form

```
Y<type> <name> <input node1> <output node1>
+ <input node2> <output node2> [control node] [device parameters]
```

Examples

```
YPowerGridTransformer pg1_2 VR1 VR2 VI1 VI2 AT=IV R=0.05 X=0.05
+ TR=0.9 PS=0.1
YPGTR pg1_2a VR1 VR2 VI1 VI2 AT=IV R=0.05 X=0.05 TR=0.9 PS={18*PI/180}
YPowerGridTransformer pg1_2b VR1 VR2 VI1 VI2 AT=PQR R=0.05 X=0.05
+ TR=0.9 PS=0.1
YPGTR pg1_2c VR1 VR2 VI1 VI2 AT=PQR R=0.05 B=0.1 X=0.05 TR=0.9 PS=0.1
YPowerGridTransformer pg1_2d Th1 Th2 VM1 VM2 AT=PQP
+ R=0.05 X=0.05 PS={18*PI/180}
YPGTR pg1_2e Th1 Th2 VM1 VM2 AT=PQP R=0.05 X=0.0 TR=0.9 PS=0.1
YPGTR pg1_2f Th1 Th2 VM1 VM2 N AT=PQP R=0.05 X=0.0 TT=VT PS=0.1
YPGTR pg1_2g Th1 Th2 VM1 VM2 Phi AT=PQP R=0.05 X=0.0 TT=PS TR=0.9
```

Parameters and Options

`type`
: The device type has a verbose (`PowerGridTransformer`) and a shortened (`PGTR`) form. Their usage may be mixed within a netlist.

`name`
: Name of the device instance. This must be present, and unique amongst the `PowerGridTransformer` devices in the netlist.

`input node`

There are two input nodes, `<input node1>` and `<input node2>`, whose definitions depend on the AnalysisType (`AT`) specified. Both nodes must be specified. This device can be viewed as a generalized 4-port resistor, using the Equivalent Real Form (ERF) described below in the equation subsections. For `IV` and `PQR` formats, `<input node1>` is the real part (`VR`) of the voltage at terminal 1 while `<input node2>` is the imaginary part (`VI`) of the voltage at terminal 1. For `PQP` format, `<input node1>` is the angle (Θ or `Th`) of the voltage at terminal 1 while `<input node2>` is the magnitude (`VM` or $|V|$) of the voltage at terminal 1. Finally, by analogy to other **Xyce** devices, node 1 can be considered as the positive terminal for this device, while node 2 is the negative terminal.

`output node`

There are two output nodes, `<output node1>` and `<output node2>`, whose definitions depend on the AnalysisType (`AT`) specified. Both nodes must be specified. This device can be viewed as a generalized 4-port resistor, using the ERF described below in the equation subsections. For `IV` and `PQR` formats, `<output node1>` is the real part (`VR`) of the voltage at terminal 2 while `<output node2>` is the imaginary part (`VI`) of the voltage at terminal 2. For `PQP` format, `<output node1>` is the angle (Θ or `Th`) of the voltage at terminal 2 while `<output node2>` is the magnitude (`VM` or $|V|$) of the voltage at terminal 2. Finally, by analogy to other **Xyce** devices, node 2 can be considered as the negative terminal for this device, while node 1 is the positive terminal.

`control input`

This is an optional node. However, it must be specified on the instance line if the transformer type (`TT`) is set to either 2 or 3. It does not exist, and must not be specified on the instance line, for the default of `TT`=1. The use of the `control input` node is covered under the definition of the `TT` instance parameter.

`AT` This device supports all three analysis types (`AT`), namely `IV`, `PQR` and `PQP`. The equations for these analysis types are described below. All power grid devices, of all types, in a **Xyce** netlist must use the same analysis type. This constraint is not checked during netlist parsing. Violation of this constraint may cause unpredictable results.

`PS` Phase shift given in radians. As illustrated above, `PS={18*PI/180}` is a convenient syntax for converting between decimal degrees and radians on a **Xyce** instance line. This instance parameter is ignored if `TT`=3, since the phase shift is set by the optional `control node` in that case.

`R` Resistance, given in per unit.

`TR` Turns ratio, given in per unit. This instance parameter is ignored if `TT`=2, since this value is set by the optional `control node` in that case..

`X` Reactance, given in per unit.

TT This is the "Transformer Type". It allows the user to implement tap-changing or phase-shifting transformers, by attaching an appropriate control-circuit to the control input node. The allowed values for TT are FT, VT or PS, with default value of FT. Any other values will cause a netlist parsing error. A transformer type of FT has a fixed turns-ratio, and is a four-terminal device with two input nodes (<input node1> and <input node2>) and two output nodes (<output node1> and <output node2>). Let the effective complex turns ratio be $r = m + jp = n * (cos(\phi) + j * sin(\phi))$. The transformer type of VT exposes the n variable as the control input node, and hence can operate with a variable turns-ratio. The transformer type of PS exposes the ϕ variable as the control input node, and hence can act as a phase shifter. The instantaneous value of n (or ϕ) can be set to the voltage applied to the control input node. There will be no current draw into (or out of) the control input node. This device model does not yet support simultaneously varying both n and ϕ.

Transformer Device Parameters

Table 2.115: PowerGridTransformer Device Instance Parameters

Parameter	Description	Units	Default
AT	Analysis Type	–	'PQP'
PS	Phase Shift	rad	0
R	Resistance	per unit	0
TR	Transformer Turns Ratio	per unit	1
TT	Transformer Type	–	'FT'
X	Reactance	per unit	0

PowerGridGenBus

Instance Form

```
Y<type> <name> <input node1> <output node1>
+ <input node2> <output node2> [device parameters]
```

Examples

```
YPowerGridGenBus GenBus1 Th1 0 VM1 0 AT=PQP VM=1.045 P=0.4
YPGGB GenBus2 Th2 GND VM2 GND AT=PQP VM=1.045 P=0.4
```

Parameters and Options

type

The device type has a verbose (PowerGridGenBus) and a shortened (PGGB) form. Their usage may be mixed within a netlist.

`name`

Name of the device instance. This must be present, and unique amongst the `PowerGridGenBus` devices in the netlist.

`input node`

There are two input nodes, `<input node1>` and `<input node2>`, whose definitions depend on the AnalysisType (`AT`) specified. Both nodes must be specified. This device can be viewed as a generalized 4-port resistor, using the Equivalent Real Form (ERF) described below in the equation subsections. For `IV` and `PQR` formats, `<input node1>` is the real part (`VR`) of the voltage at terminal 1 while `<input node2>` is the imaginary part (`VI`) of the voltage at terminal 1. For `PQP` format, `<input node1>` is the angle (Θ or `Th`) of the voltage at terminal 1 while `<input node2>` is the magnitude (`VM` or $|V|$) of the voltage at terminal 1. Finally, by analogy to other **Xyce** devices, node 1 can be considered as the positive terminal for this device, while node 2 is the negative terminal.

`output node`

There are two output nodes, `<output node1>` and `<output node2>`, whose definitions depend on the AnalysisType (`AT`) specified. Both nodes must be specified. This device can be viewed as a generalized 4-port resistor, using the ERF described below in the equation subsections. For `IV` and `PQR` formats, `<output node1>` is the real part (`VR`) of the voltage at terminal 2 while `<output node2>` is the imaginary part (`VI`) of the voltage at terminal 2. For `PQP` format, `<output node1>` is the angle (Θ or `Th`) of the voltage at terminal 2 while `<output node2>` is the magnitude (`VM` or $|V|$) of the voltage at terminal 2. Finally, by analogy to other **Xyce** devices, node 2 can be considered as the negative terminal for this device, while node 1 is the positive terminal.

`AT` This device currently only supports the `PQP` analysis type (`AT`). The equations for the `PQP` analysis type are described below. All power grid devices, of all types, in a **Xyce** netlist must use the same analysis type. This constraint is not checked during netlist parsing. Violation of this constraint may cause unpredictable results.

`P` Generator Output Power, given in per unit. As noted below, positive real power (`P`) and positive reactive power (`Q`) flow out of the positive (`<input node1>` and `<input node2>`) terminals into the power grid. This is opposite from the normal convention for voltage and current sources in **Xyce** and SPICE.

`QLED`

This is the Q-Limit Enforcement Delay. It is only used if either `QMAX` or `QMIN` is specified. The Q-Limits are not enforced for the first `QLED` Newton iterations of the DC Operating Point (DCOP) calculation. This may be useful if a given generator bus has, for example, a very small value of `QMIN` [32]. If `QMAX` or `QMIN` is specified and `QLED` is omitted then the default `QLED` value of 0 is used.

QMAX
: The upper limit on the reactive power (Q) flow into the power grid, given in per unit. If this parameter is omitted on the instance line then no upper limit on the reactive power flow is enforced. It is recommended that either both QMAX and QMIN be specified or that both be omitted.

QMIN
: The lower limit on the reactive power (Q) flow into the power grid, given in per unit. If this parameter is omitted on the instance line then no lower limit on the reactive power flow is enforced. It is recommended that either both QMAX and QMIN be specified or that both be omitted.

VM
: Fixed voltage magnitude, given in per unit.

Generator Bus Device Parameters

Table 2.116: PowerGridGenBus Device Instance Parameters

Parameter	Description	Units	Default
AT	Analysis Type	–	'PQP'
P	Generator Output Power	per unit	1
QLED	Q-Limit Enforcement Delay	–	0
QMAX	Reactive Power Max Limit	per unit	1
QMIN	Reactive Power Min Limit	per unit	0
VM	Voltage Magnitude	per unit	1

Branch Current and Power Accessors

This version of the Power Grid devices does not support the branch current accessor, I(), or the power accessors, P() or W().

Compatibility with .STEP

.STEP should work with all of the instance parameters for the power grid devices. The two exceptions are the Analysis Type (AT) for all of the power grid devices and the Transformer Type (TT) for the Transformer device. Those two parameters must be constant for all steps.

Model Limitations and Caveats

The following features are not supported by this release of the Power Grid device models.

- The Generator Bus device model only supports the PQ Polar format. So, reactive power (QMAX and QMIN) limits in the Generator Bus device model are also only supported for that format.
- Magnetizing susceptance for transformers.

- Certain instance parameters, or combinations of instance parameters, will cause errors during netlist parsing. In particular, either `B`, `R` or `X` must be non-zero for the Branch device. Either `B` or `G` must be non-zero for the Bus Shunt device. Either `R` or `X` must be non-zero for the Transformer device. `TR` must not be zero for the Transformer device. `VM` must be positive for the Generator Bus device.

Equivalent Real Form

An Equivalent Real Form (ERF) must be used to make the complex-valued voltage-current and power-flow equations compatible with the real-valued solvers used by **Xyce**. The equations given below use a K1 ERF [31], which solves the complex-valued system of equations $I = YV$ as follows. Let $Y = (g + jb)$, $V = (V_R + jV_I)$ and $I = (I_R + jI_I)$. Then the equivalent set of real-valued equations is:

$$\begin{bmatrix} I_R \\ I_I \end{bmatrix} = \begin{bmatrix} g & -b \\ g & b \end{bmatrix} \begin{bmatrix} V_R \\ V_I \end{bmatrix} \tag{2.23}$$

Y Matrices for Power Grid Branch and Bus Shunt

The Y-Matrix for the `PowerGridBranch` device can be expressed as follows where $A = (R+jX)^{-1}$, R is the branch resistance, X is the branch reactance and B is the branch shunt susceptance given on the device's instance line:

$$\begin{bmatrix} Y_{11} & Y_{12} \\ Y_{21} & Y_{22} \end{bmatrix} = \begin{bmatrix} g_{11} + jb_{11} & g_{12} + jb_{12} \\ g_{21} + jb_{21} & g_{22} + jb_{22} \end{bmatrix} = \begin{bmatrix} A & -A + 0.5j * B \\ -A + 0.5j * B & A \end{bmatrix} \tag{2.24}$$

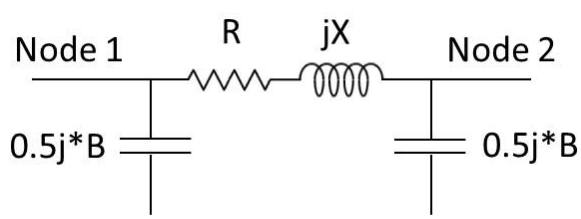

Figure 2.3. Lumped Π Model for PowerGridBranch.

The Y-Matrix for the `PowerGridBusShunt` device can be expressed as follows where G is the bus shunt conductance and B is the bus shunt susceptance given on the device's instance line:

$$\begin{bmatrix} Y_{11} & Y_{12} \\ Y_{21} & Y_{22} \end{bmatrix} = \begin{bmatrix} g_{11} + jb_{11} & g_{12} + jb_{12} \\ g_{21} + jb_{21} & g_{22} + jb_{22} \end{bmatrix} = \begin{bmatrix} G + jB & -G - jB \\ -G - jB & G + jB \end{bmatrix} \tag{2.25}$$

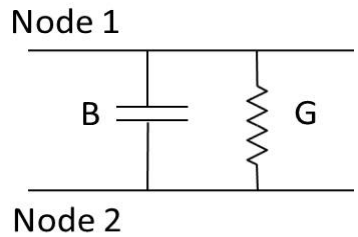

Figure 2.4. Equivalent Circuit for PowerGridBusShunt.

Equations Common to Power Grid Branch and Bus Shunt

The `PowerGridBranch` and `PowerGridBusShunt` devices use the same basic equations to model voltage and current flow or voltage and power flow. The differences are in the Y-Matrices described above. There are three options for the equations used, namely I=YV, PQ Polar and PQ Rectangular.

For the I=YV format, the device equations for the `PowerGridBranch` and `PowerGridBusShunt` devices are as follows, where the g_{ij} and b_{ij} terms are given above. Also, V_{R1} and V_{I1} are the real and imaginary parts of the voltage at terminal 1. I_{R1} and I_{I1} are the real and imaginary parts of the current at terminal 1.

$$\begin{bmatrix} I_{R1} \\ I_{R2} \\ I_{I1} \\ I_{I2} \end{bmatrix} = \begin{bmatrix} g_{11} & g_{12} & -b_{11} & -b_{12} \\ g_{21} & g_{22} & -b_{21} & -b_{22} \\ b_{11} & b_{12} & g_{11} & g_{12} \\ b_{21} & b_{22} & g_{21} & g_{22} \end{bmatrix} \begin{bmatrix} V_{R1} \\ V_{R2} \\ V_{I1} \\ V_{I2} \end{bmatrix} \tag{2.26}$$

For the PQ Rectangular format, the device equations are nonlinear [32].

$$P_1 = g_{11}(V_{R1}^2 + V_{I1}^2) + V_{R1}(g_{12} * V_{R2} - b_{12} * V_{I2}) + V_{I1}(b_{12} * V_{R2} + g_{12} * V_{I2}) \tag{2.27}$$
$$P_2 = g_{22}(V_{R2}^2 + V_{I2}^2) + V_{R2}(g_{21} * V_{R1} - b_{21} * V_{I1}) + V_{I2}(b_{21} * V_{R1} + g_{21} * V_{I1}) \tag{2.28}$$
$$Q_1 = -b_{11}(V_{R1}^2 + V_{I1}^2) + V_{I1}(g_{12} * V_{R2} - b_{12} * V_{I2}) + V_{R1}(b_{12} * V_{R2} + g_{12} * V_{I2}) \tag{2.29}$$
$$Q_2 = -b_{22}(V_{R2}^2 + V_{I2}^2) + V_{I2}(g_{21} * V_{R1} - b_{21} * V_{I1}) + V_{R2}(b_{21} * V_{R1} + g_{21} * V_{I1}) \tag{2.30}$$

For the PQ Polar format, the device equations are also nonlinear [32]. Define $|V_1|$ as the voltage magnitude at terminal 1 and Θ_1 as the voltage angle at terminal 1.

$$P_1 = g_{11} * |V_1|^2 + |V_1| * |V_2| * (g_{12} * cos(\Theta_1 - \Theta_2) + b_{12} * sin(\Theta_1 - \Theta_2)) \tag{2.31}$$
$$P_2 = g_{22} * |V_2|^2 + |V_2| * |V_1| * (g_{21} * cos(\Theta_2 - \Theta_1) + b_{21} * sin(\Theta_2 - \Theta_1)) \tag{2.32}$$
$$Q_1 = -b_{11} * |V_1|^2 + |V_1| * |V_2| * (g_{12} * sin(\Theta_1 - \Theta_2) - b_{12} * cos(\Theta_1 - \Theta_2)) \tag{2.33}$$
$$Q_2 = -b_{22} * |V_2|^2 + |V_2| * |V_1| * (g_{21} * sin(\Theta_2 - \Theta_1) - b_{21} * cos(\Theta_2 - \Theta_1)) \tag{2.34}$$

Equations for Power Grid Transformer

The equations for the PowerGridTransformer device are similar to those used by the PowerGridBranch and PowerGridBusShunt devices. The circuit diagram for the PowerGridTransformer is shown below.

For I=YV and PQ Rectangular formats, the equations are the same as for the `PowerGridBranch` and `PowerBusBusShunt` devices. However, the following Y-Matrix is used where where $A = (R + jX)^{-1}$, R is the resistance, X is the reactance, n is the turns ratio (which is the `TR` instance parameter) and ϕ is the phase shift in radians (which is the `PS` instance parameter).

For the I=YV and PQ Rectangular formats, the Y matrix is not symmetric and is given by the following [33]. Let the effective complex turns ratio be $r = m + jp = n * (cos(\phi) + j * sin(\phi))$:

$$\begin{bmatrix} Y_{11} & Y_{12} \\ Y_{21} & Y_{22} \end{bmatrix} = \begin{bmatrix} g_{11} + jb_{11} & g_{12} + jb_{12} \\ g_{21} + jb_{21} & g_{22} + jb_{22} \end{bmatrix} = \begin{bmatrix} A * (m^2 + p^2)^{-1} & -A * (m - jp)^{-1} \\ -A * (m + jp)^{-1} & A \end{bmatrix} \quad (2.35)$$

The voltage-current and power flow equations for the I=YV and PQ Rectangular formats are then the same as for the `PowerGridBranch` and `PowerGridBusShunt` devices, with the modified Y-matrix parameters given above.

For the PQ Polar format, the Y matrix is not symmetric and is given by [32]:

$$\begin{bmatrix} Y_{11} & Y_{12} \\ Y_{21} & Y_{22} \end{bmatrix} = \begin{bmatrix} g_{11} + jb_{11} & g_{12} + jb_{12} \\ g_{21} + jb_{21} & g_{22} + jb_{22} \end{bmatrix} = \begin{bmatrix} A * n^{-2} & -A * n^{-1} \\ -A * n^{-1} & A \end{bmatrix} \quad (2.36)$$

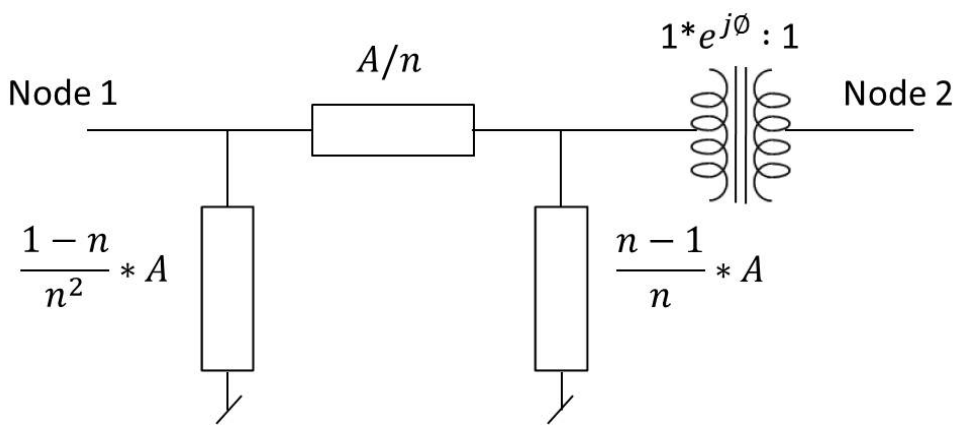

Figure 2.5. Equivalent Circuit for PowerGridTransformer.

The power flow equation for PQ Polar format are then:

$$P_1 = g_{11} * |V_1|^2 + |V_1| * |V_2| * (g_{12} * cos(\Theta_1 - \Theta_2 - \phi) + b_{12} * sin(\Theta_1 - \Theta_2 - \phi)) \quad (2.37)$$

$$P_2 = g_{22} * |V_2|^2 + |V_2| * |V_1| * (g_{21} * cos(\Theta_2 - \Theta_1 + \phi) + b_{21} * sin(\Theta_2 - \Theta_1 + \phi)) \quad (2.38)$$

$$Q_1 = -b_{11} * |V_1|^2 + |V_1| * |V_2| * (g_{12} * sin(\Theta_1 - \Theta_2 - \phi) - b_{12} * cos(\Theta_1 - \Theta_2 - \phi)) \quad (2.39)$$

$$Q_2 = -b_{22} * |V_2|^2 + |V_2| * |V_1| * (g_{21} * sin(\Theta_2 - \Theta_1 + \phi) - b_{21} * cos(\Theta_2 - \Theta_1 + \phi)) \quad (2.40)$$

Equations for Power Grid Gen Bus

The `PowerGridGenBus` is an active device that functions as an ideal generator with a fixed power output (P) and voltage magnitude (VM). Reactive power (`QMAX` and `QMIN`) limits are also supported. The device equations for the PQ Polar format are as follows [32]. The other solution formulations are not supported in this release. If reactive power limits are not being enforced then:

$$P_1 = P \quad (2.41)$$

$$|V_1| = VM \quad (2.42)$$

If reactive power limits are being enforced then P_1 is still held constant but the behavior of the V_1 terminal changes between a constant-voltage and a constant-current source. In particular, $|V_1| = VM$ only if `QMIN` $< Q_1 <$ `QMAX`. Otherwise, $|V_1|$ is unconstrained and the appropriate `QMIN` or `QMAX` value is enforced at the V_1 terminal instead.

The convention for Power Grids is that positive power is injected into the grid. So, positive real (P) and reactive power (Q) flow out of the positive terminals (`inputNode 1` and `inputNode 2`). This is reversed from the normal convention for current direction for voltage and current sources in either **Xyce** or SPICE.

2.3.29 Memristor Device

Symbol

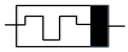

Instance Form

```
ymemristor <name> <(+) node> <(-) node> <model>
```

Model Form

```
.MODEL <model name> MEMRISTOR level=2 [model parameters]
```

Examples

```
ymemristor mr1 n1 n2 mrm2

.model mrm2 memristor level=2 ron=50 roff=1000
+ koff=1.46e-18 kon=-4.68e-22
+ alphaoff=10 alphaon=10 wc=1.0e-12
+ ioff=115e-6 ion=-8.9e-6 xscaling=1.0e9 wt=4


ymemristor mr2 n1 n2 mrm3 xo=0.11

.MODEL mrm3 memristor level=3 a1=0.17 a2=0.17 b=0.05 vp=0.16 vn=0.15
+ ap=4000 an=4000 xp=0.3 xn=0.5 alphap=1 alphan=5 eta=1


ymemristor mr3 n1 n2 mrm4

.model mrm4 memristor level=4
+ fxpdata=fxp_table.csv
+ fxmdata=fxm_table.csv
+ I1=85.37e-6 I2=90.16e-6 V1=0.265 V2=0.265 G0=130.72e-6
+ VP=0.7 VN=1.0 d1=9.87 d2=-4.82
+ C1=1000 C2=1000
```

Parameters and Options

`(+) node`
`(-) node`
: Polarity definition for a positive voltage across the memristor. The first node is defined as positive. Therefore, the voltage across the component is the first node voltage minus the second node voltage.

Comments

The `level=2` memristor device is an implementation of the TEAM formulation described in [34] and [35]. The `level=3` memristor device is an implementation

of the Yakopcic formulation described in [36]. The `level=4` memristor device is an implementation of the Piecewise Empirical Model described in [37].

Positive current flows from the `(+)` node through the device to the `(-)` node. The power through the device is calculated with $I \cdot \Delta V$ where the voltage drop is calculated as $(V_+ - V_-)$ and positive current flows from V_+ to V_-.

Device Equations for TEAM Formulation

The current voltage relationship for the TEAM formulation can be linear or nonlinear and this is selectable with the instance parameter `IVRELATION`. The default is the linear relationship which is:

$$v(t) = \left[R_{ON} + \frac{R_{OFF} - R_{ON}}{x_{OFF} - x_{ON}}\left(x - x_{ON}\right)\right] i(t) \tag{2.43}$$

The non-linear relationship is:

$$v(t) = R_{ON} e^{\lambda(x - x_{ON})/(x_{OFF} - x_{ON})} i(t) \tag{2.44}$$

where λ is defined as:

$$\frac{R_{OFF}}{R_{ON}} = e^{\lambda} \tag{2.45}$$

In the above equations x represents a doped layer whose growth determines the overall resistance of the device. The equation governing the value of x is:

$$\frac{dx}{dt} = \begin{cases} k_{OFF}\left(\frac{i}{i_{OFF}} - 1\right)^{\alpha_{OFF}} f_{OFF}(x) & 0 < i_{OFF} < i \\ 0 & i_{ON} < i < i_{OFF} \\ k_{ON}\left(\frac{i}{i_{on}} - 1\right)^{\alpha_{on}} f_{ON}(x) & i < i_{ON} < 0 \end{cases} \tag{2.46}$$

The functions $f_{ON}(x)$ and $f_{OFF}(x)$ are window functions designed to keep x within the defined limits of x_{ON} and x_{OFF}. Four different types of window functions are available and this is selectable with the model parameter `WT`. Note that the TEAM memristor device is formulated to work best with the TEAM, Kvatinsky, window function `WT=4` . Other window functions should be used with caution.

Device Equations for Yakopcic Formulation

The current voltage relationship for the Yakopcic memristor device is: [36]

$$I(t) = \begin{cases} a_1 x(t) \sinh(bV(t)) & V(t) \geq 0 \\ a_2 x(t) \sinh(bV(t)) & V(t) < 0 \end{cases} \tag{2.47}$$

$$g(V(t)) = \begin{cases} A_p \left(\exp^{V(t)} - \exp^{V_p}\right) & V(t) > V_p \\ -A_n \left(\exp^{-V(t)} - \exp^{V_n}\right) & V(t) < -V_n \\ 0 & -V_n \leq V(t) \leq V_p \end{cases} \tag{2.48}$$

The internal state variable, x, is governed by the equation:

$$\frac{dx}{dt} = ng(V(t))f(x(t)) \tag{2.49}$$

where $f(x)$ is defined by:

$$f(x) = \begin{cases} \exp^{-\alpha_p(x-x_p)} w_p(x, x_p) & x \geq x_p \\ 1 & x \leq x_p \end{cases} \tag{2.50}$$

$$f(x) = \begin{cases} \exp^{\alpha_n(x+x_n-1} w_n(x, x_n) & x \leq 1 - x_n \\ 1 & x > 1 - x_n \end{cases} \tag{2.51}$$

$$w_p(x, x_p) = \frac{x_p - x}{1 - x_p} + 1 \tag{2.52}$$

$$w_n(x, x_n) = \frac{x}{1 - x_n} \tag{2.53}$$

Note, the quantities, x_p, x_n, α_p, α_n, A_p, A_n, a_1, a_2 and$b$ are model parameters that can be specified in the device's model block.

Device Equations for the PEM Formulation

The PEM memristor device is similar to the TEAM and Yakopcic formulations in that an internal state variable, x, is used to capture the device's response to its history.

The I-V relationship is

$$I = x\, h(V) \tag{2.54}$$

and $h(V)$ is defined by:

$$h(V) = I_1 * exp(V/V_1) - I_2 * exp(-V/V_2) + G_0 V - (I_1 - I_2) \tag{2.55}$$

where I_1, I_2, V_1, V_2 and G_0 are model parameters.

The internal variable, x, is defined by:

$$\frac{dx}{dt} = G(V)f(x) \tag{2.56}$$

with

$$G(V) = \begin{cases} C_1\left(\exp^{d_1[V(t)-V_p]} - 1\right) & V > V_p \\ C_2\left(\exp^{d_2[V(t)-V_n]} - 1\right) & V < -V_n \\ 0 & -V_n \leq V(t) \leq V_p \end{cases} \tag{2.57}$$

Finally, the function $f(x)$ is defined by a user supplied set set data which is used with linear interpolation to find the current value of $f(x)$. Separate data sets are used for forward bias and reverse bias.

$$f(x) = \begin{cases} F^{+}\texttt{dataset} & V > 0 \\ F^{-}\texttt{dataset} & V < 0 \end{cases} \tag{2.58}$$

Device Parameters for TEAM Formulation

Table 2.117: MemristorTEAM Device Instance Parameters

Parameter	Description	Units	Default
IVRELATION	IV relationship to use, 0 is linear, 1 is nonlinear	–	0

Model Parameters for TEAM Formulation

Table 2.118: MemristorTEAM Device Model Parameters

Parameter	Description	Units	Default
ALPHAOFF	Modeling Coefficient	–	3
ALPHAON	Modeling Coefficient	–	3
AOFF	Window Function Parameter (window 4)	m	3e-09
AON	Window Function Parameter (window 4)	m	0
D	Window Function Parameter (windows 1, 2 and 3)	–	0.000115
IOFF	Current scale in off state	Ω	0.000115
ION	Current scale in On state	A	8.9e-06
J	Window Function Parameter (window 3)	–	0.000115
KOFF	Modeling Coefficient	m/s	8e-13
KON	Modeling Coefficient	m/s	-8e-13

Table 2.118: MemristorTEAM Device Model Parameters

Parameter	Description	Units	Default
P	Window Function Parameter (windows 1, 2 and 3)	–	0.000115
ROFF	Resistence in off state	Ω	1000
RON	Resistence in on state	Ω	50
WC	Window Function Parameter (window 4)	m	1.07e-12
WT	Type of windowing function: 0-None, 1-Jogelkar, 2-Biolek, 3-Prodromakis, 4-Kvatinsky	–	0
XOFF	Modeling Coefficient	m	3e-09
XON	Modeling Coefficient	m	0
XSCALING	Scaling for x variable. For example 1e9 if x will be in units of nanometers.	–	1

Device Parameters for Yakopcic Formulation

Table 2.119: MemristorYakopcic Device Instance Parameters

Parameter	Description	Units	Default
XO	Initial value for internal variable x	–	0

Model Parameters for Yakopcic Formulation

Table 2.120: MemristorYakopcic Device Model Parameters

Parameter	Description	Units	Default
A1	Dielectric layer thickness parameter [dimensionless]	–	1
A2	Dielectric layer thickness parameter [dimensionless]	–	1
ALPHAN	State variable motion.	–	1
ALPHAP	State variable motion.	–	1
AN	Negative Voltage Threshold Magnitude Parameter	–	1
AP	Positive Voltage Threshold Magnitude Parameter	–	1
B	Curvature in I-V relation. Relates to how much conduction in the device is Ohmic and versus tunnel barrier.	–	1
ETA	State variable motion relative to voltage.	–	1
RESDELTA	RTN model in resistance: Base change in resistance for RTN	Ω	0

Table 2.120: MemristorYakopcic Device Model Parameters

Parameter	Description	Units	Default
RESDELTAGRAD	RTN model in resistance: Base change in resistance for RTN scaled by R	–	0
RESEPTD	RTN model in resistance: Minimum allowed update time	s	1e-10
RESLAMBDA	RTN model: lambda	–	0
RESNOISE	RTN model in resistance (on/off)	–	false
RESSEED	RTN model in resistance: seed	–	0
RESTD	RTN model in resistance: Update time	s	0
VN	Negative Voltage Threshold	V	-0.01
VP	Positive Voltage Threshold	V	0.01
XDELTA	RTN model in growth: Base change in growth rate for RTN	Ω	0
XDELTAGRAD	RTN model in growth: Base change in growth for RTN scaled by X	–	0
XEPTD	RTN model in growth: Minimum allowed update time	s	1e-10
XLAMBDA	RTN growth model: lambda	–	0
XN	State variable motion.	–	1
XNOISE	RTN model in growth (on/off)	–	false
XP	State variable motion.	–	1
XSCALING	Scaling for x variable. For example 1e9 if x will be in units of nanometers.	–	1
XSEED	RTN model in growth: seed	–	0
XTD	RTN model in growth: Update time	s	0

Device Parameters for PEM Formulation

Table 2.121: MemristorPEM Device Instance Parameters

Parameter	Description	Units	Default
X0	Initial value for internal variable x	–	0

Model Parameters for PEM Formulation

Table 2.122: MemristorPEM Device Model Parameters

Parameter	Description	Units	Default
C1	State variable proportionality parameter for forward bias	–	1

Table 2.122: MemristorPEM Device Model Parameters

Parameter	Description	Units	Default
C2	State variable proportionality parameter for negative bias	–	1
D1	Positive Voltage Threshold Magnitude Parameter	–	1
D2	Negative Voltage Threshold Magnitude Parameter	–	1
FXMDATA	File from which to read x,f-(x) data	–	'filem.dat'
FXPDATA	File from which to read x,f+(x) data	–	'filep.dat'
G0	Conductance factor.	–	1
I1	Current Scale factor.	A	1
I2	Current Scale factor.	A	1
V1	Voltage Scale factor.	V	1
V2	Voltage Scale factor.	V	1
VN	Negative Voltage Threshold	V	-0.01
VP	Positive Voltage Threshold	V	0.01

2.3.30 Subcircuit

A subcircuit can be introduced into the circuit netlist using the specified nodes to substitute for the argument nodes in the definition. It provides a building block of circuitry to be defined a single time and subsequently used multiple times in the overall circuit netlists. See Section 2.1.28 for more information about subcircuits.

Instance Form

```
X<name> [node]* <subcircuit name> [PARAMS: [<name> = <value>]*]
```

Examples

```
X12 100 101 200 201 DIFFAMP
XBUFF 13 15 UNITAMP
XFOLLOW IN OUT VCC VEE OUT OPAMP
XFELT 1 2 FILTER PARAMS: CENTER=200kHz
XNANDI 25 28 7 MYPWR MYGND PARAMS: IO_LEVEL=2
```

Parameters and Options

`subcircuit name`
: The name of the subcircuit's definition.

`PARAMS:`
: Passed into subcircuits as arguments and into expressions inside the subcircuit.

Comments

There must be an equal number of nodes in the subcircuit call and in its definition.

Subcircuit references may be nested to any level. However, the nesting cannot be circular. For example, if subcircuit `A`'s definition includes a call to subcircuit `B`, then subcircuit `B`'s definition cannot include a call to subcircuit `A`.

2.4 TCAD Devices

Semiconductor device simulation, which is based on a coupled set of partial differential equations (PDE's) is supported in **Xyce**. Such devices can be invoked from the circuit netlist in a manner similar to traditional SPICE-style analog devices. One dimensional and two dimensional devices are supported, with the dimensionality determined by the device model level.

1D Device Form

```
YPDE <name> <node> [node] [model name]
+ [device parameters]
```

2D Device Form

```
YPDE <name> <node> <node> [node][node] [model name]|
+ [device parameters]
```

Model Form

```
.MODEL <model name> ZOD [model parameters]
```

Comments

All of the PDE parameters are specified on the instance level. The model statement is used only for specifying if the device is 1D or 2D, via the level parameter. Both the 1D and the 2D devices can construct evenly-spaced meshes internally, or an unstructured mesh can be read in from an external mesh file.

The eletrode, doping and material parameters are specified using a special format that is described in the tables that are referenced in the instance parameter tables.

TCAD Device Parameters

Most TCAD device parameters are specified on the instance level. The only TCAD device model parameter is the level, which specifies whether the model is one or two dimensions.

Table 2.123: PDE Device Model Parameters

Parameter	Description	Units	Default
LEVEL	Determines if the device is 1D or 2D 1=1D, 2=2D	–	1

Table 2.124: 1D PDE (level 1) Device Instance Parameters

Parameter	Description	Units	Default
AUGER	Flag to turn on/off Auger recombination	logical (T/F)	true
BULKMATERIAL	Bulk semiconductor material	–	'SI'
DOPINGPROFILES		See Table 2.129	

Table 2.124: 1D PDE (level 1) Device Instance Parameters

Parameter	Description	Units	Default
FERMIDIRAC	Use Fermi-Dirac statistics.	logical (T/F)	false
FIELDDEP	If true, use field dependent mobility.	logical (T/F)	false
LAYER		See Table 2.126	
MASKVARSTIA	If set to true, then some variables are excluded from the time integration error control calculation.	logical (T/F)	false
MAXVOLTDELTA	Maximum voltage change used by two-level Newton algorithm.	V	0.025
MESHFILE		–	'internal.msh'
MOBMODEL	Mobility model.	–	'ARORA'
NODE		See Table 2.127	
NX	Number of mesh points	–	11
REGION		See Table 2.130	
SRH	Flag to turn on/off Shockley-Read-Hall (SRH) recombination.	logical (T/F)	true
THERMIONICEMISSION		logical (T/F)	false
TUNNELING		–	'none'
USEOLDNI	Flag for using old(inaccurate) intrinsic carrier calculation.	logical (T/F)	false
VOLTLIM	Flag to apply voltage limiting. This is only relevant for an experimental two-level Newton solver.	logical (T/F)	false
Doping Parameters			
DOPING_FILE	File containing doping profile.	–	'NOFILE'
GRADED	Flag for graded junction vs. abrupt junction. (1/true=graded, 0/false=abrupt)	logical (T/F)	false
NA	Acceptor doping level	cm^{-3}	1e+15
ND	Donor doping level	cm^{-3}	1e+15
NDOPE_FILE	File containing doping profile for N-type dopants.	–	'NOFILE'
PDOPE_FILE	File containing doping profile for P-type dopants.	–	'NOFILE'
WJ	Junction width, if graded junction enabled.	cm	0.0001
Geometry Parameters			
ANODE.AREA	Anode area (used for two-terminal devices)	cm^{-2}	0
AREA	Cross sectional area of the device.	cm^{-2}	1
BASE.AREA	Base area (used for three-terminal (BJT) devices)	cm^{-2}	0

Table 2.124: 1D PDE (level 1) Device Instance Parameters

Parameter	Description	Units	Default
BASE.LOC	Location of base contact (necessary if running with three terminals).	cm	0.0005
CATHODE.AREA	Cathode area (used for two-terminal devices)	cm^{-2}	0
COLLECTOR.AREA	Collector area (used for three-terminal (BJT) devices)	cm^{-2}	0
EMITTER.AREA	Emitter area (used for three-terminal (BJT) devices)	cm^{-2}	0
L	Device width. (Synonym with W parameter)	cm	0.001
W	Device width. (Synonym with L parameter)	cm	0.001
Temperature Parameters			
TEMP	Device temperature	°C	27
Model Output Parameters			
FIRSTELECTRODEOFFSET	This is an output parameter. It is only used if OFFSETOUTPUTVOLTAGE=true. (see description of that paramaeter	logical (T/F)	false
GNUPLOTLEVEL	Flag for gnuplot output. 0 - no gnuplot files. 1 - gnuplot files. gnuplot is an open source plotting program that is usually installed on Linux systems. gnuplot files will have the *Gnu.dat suffix, and the prefix will be thename of the device instance.	–	1
OFFSETOUTPUTVOLTAGE	This is an output parameter that determines the “zero” of the potential at output. If OFFSETOUTPUTVOLTAGE=true (default) it will adjust the voltages at output so that the minimum voltage is zero. If true and also FIRSTELECTRODEOFFSET=true, then the voltage of the first electrode is the zero point. If OFFSETOUTPUTVOLTAGE=false, the output voltage sets the intrisic Fermi level to zero. Depending on circumstances each of these may be more or less convenient for plotting.	logical (T/F)	true
OUTPUTINTERVAL	Time interval for tecplot output (if tecplot is enabled).	s	0
OUTPUTNLPOISSON	Flag to determine if the results of the nonlinear Poisson calculation is included in the output files. Normally, this calculation is used to initialize a drift-diffusion calculation and isn’t of interest.	logical (T/F)	false
SGPLOTLEVEL	Flag for sgplot output. 0 - no sgplot files. 1 - sgplot files. sgplot is a plotting program that comes as part of the SG Framework. sgplot files will have the *.res suffix, and the prefix will be the name of the device instance	–	0

Table 2.124: 1D PDE (level 1) Device Instance Parameters

Parameter	Description	Units	Default
TECPLOTLEVEL	Setting for Tecplot output: 0 - no Tecplot files 1 - Tecplot files, each output in a separate file. 2 - Tecplot file, each outputappended to a single file. Tecplot files will have the .dat suffix, and the prefix will be the name of the device instance	–	1
Scaling Parameters			
C0	Density scalar; adjust to mitigate convergence problems.The model will do all of its scaling automatically, so it is generally not necessary to specify it manually.	cm^{-3}	1e+15
DENSITYSCALARFRACTION	Fraction of the maximum doping by which density will be scaled.The model will do all of its scaling automatically, so it is generally not necessary to specify it manually.	logical (T/F)	0.1
SCALEDENSITYTOMAXDOPING	If set the density will be scaled by a fraction of the maximum doping.The model will do all of its scaling automatically, so it is generally not necessary to specify it manually.	logical (T/F)	true
t0	Time scalar; adjust to mitigate convergence problems.The model will do all of its scaling automatically, so it is generally not necessary to specify it manually.	s	1e-06
X0	Length scalar; adjust to mitigate convergence problems.The model will do all of its scaling automatically, so it is generally not necessary to specify it manually.	cm	1e-07
Boundary Condition Parameters			
ANODE.BC	Anode voltage boundary condition. Only used if device is uncoupled from circuit, and running in diode mode.	V	0.5
BASE.BC	Base voltage boundary condition. Only used if device is uncoupled from circuit, and running in BJT mode.	V	0
CATHODE.BC	Cathode voltage boundary condition. Only used if device is uncoupled from circuit, and running in diode mode.	V	0
COLLECTOR.BC	Collector voltage boundary condition. Only used if device is uncoupled from circuit, and running in BJT mode.	V	0
EMITTER.BC	Emitter voltage boundary condition. Only used if device is uncoupled from circuit, and running in BJT mode.	V	0.5

Table 2.125: 2D PDE (level 2) Device Instance Parameters

Parameter	Description	Units	Default
BULKMATERIAL	Material of bulk material.	–	'SI'
DISPLCUR	If true, displacement current is computed and output	logical (T/F)	false
DOPINGPROFILES		See Table 2.129	
MAXVOLTDELTA	Maximum voltage change used by two-level Newton algorithm.	V	0.025
MESHFILE	This is a required field for a 2D simulation. If the userspecifies meshfile=internal.mesh, the model will create aCartesian mesh using the parameters L,W,NX and NY. If the user specifies anything else (for example meshfile=diode.msh), the model will attempt to read in a mesh file of that name. The format is assumed to be that of the SG Framework.	–	'internal.msh'
MOBMODEL	Mobility model.	–	'ARORA'
NODE		See Table 2.128	
NX	Number of mesh points, x-direction.	–	11
NY	Number of mesh points, y-direction.	–	11
REGION		See Table 2.130	
TYPE	P-type or N-type - this is only relevant if using the default dopings	–	'PNP'
USEMATRIXGID		–	false
USEOLDNI	Flag for using old (inaccurate) intrinsic carrier calculation.	logical (T/F)	false
USEVECTORGID		–	false
VOLTLIM		logical (T/F)	false
Doping Parameters			
GRADED	Flag for graded junction vs. abrupt junction. (1/true=graded, 0/false=abrupt)	logical (T/F)	false
NA	Acceptor doping level	cm^{-3}	1e+15
ND	Donor doping level	cm^{-3}	1e+15
WJ	Junction width, if graded junction enabled.	cm	0.0001
Geometry Parameters			
AREA	Cross sectional area of the device.	cm^{-2}	1
CYL	Flag to enable cylindrical geometry	logical (T/F)	false
L	Device length	cm	0.001
W	Device width	cm	0.001

Table 2.125: 2D PDE (level 2) Device Instance Parameters

Parameter	Description	Units	Default
	Temperature Parameters		
TEMP	Device temperature	°C	27
	Model Output Parameters		
GNUPLOTLEVEL	Flag for gnuplot output. 0 - no gnuplot files. 1 - gnuplot files. gnuplot is an open source plotting program that is usually installed on Linux systems. gnuplot files will have the *Gnu.dat suffix, and the prefix will be thename of the device instance.	–	0
INTERPGRIDSIZE		–	20
OUTPUTINTERVAL	Time interval for tecplot output (if tecplot is enabled).	s	0
OUTPUTNLPOISSON	Flag to determine if the results of the nonlinear Poisson calculation is included in the output files. Normally, this calculation is used to initialize a drift-diffusion calculation and isn't of interest.	logical (T/F)	false
SGPLOTLEVEL	Flag for sgplot output. 0 - no sgplot files. 1 - sgplot files. sgplot is a plotting program that comes as part of the SG Framework. sgplot files will have the *.res suffix, and the prefix will be the name of the device instance	–	0
TECPLOTLEVEL	Setting for Tecplot output: 0 - no Tecplot files 1 - Tecplot files, each output in a separate file. 2 - Tecplot file, each outputappended to a single file. Tecplot files will have the .dat suffix, and the prefix will be the name of the device instance	–	1
TXTDATALEVEL	Flag for volume-averaged text output. 0 - no text files. 1 - text files. txtdataplot files will have the *.txt suffix, and the prefix will be the name of the device instance.	–	1
	Scaling Parameters		
X0	Length scalar; adjust to mitigate convergence problems. The model will do all of its scaling automatically, so it is generally not necessary to specify it manually.	cm	0.0001
	Boundary Condition Parameters		
CONSTBOUNDARY		–	false

Layer Parameters

Table 2.126: LAYER Composite Parameters

Parameter	Description	Units	Default
CON		–	1.42248
ConductionBandDOS		–	2.89e+19
DIEL		–	13.1
ELMOBO		–	2240
ELVSAT		–	7.7e+06
EMASS		–	0.067
GRADEDWIDTH		–	0
HMASS		–	0.5
HOMOBO		–	30
HOVSAT		–	7.7e+06
MATERIAL		–	'gaas'
NAME		–	'EMITTER'
NARCO		–	0.047
NARVA		–	0.047
NDOPE		–	0
NI		–	1.79e+06
NX		–	25
PDOPE		–	5e+19
VAL		–	0
ValenceBandDOS		–	2.66e+19
WIDTH		–	1e-06

Electrode Parameters 1D

Table 2.127: NODE Composite Parameters

Parameter	Description	Units	Default
AREA		–	0
BC	Carrier density boundary condition type (dirichlet or neumann)	–	'dirichlet'
LOCATION		–	0
MATERIAL	Contact material	–	'neutral'
NAME	Electrode name	–	'anode'
OXIDEBNDRYFLAG	Oxide layer boolean	–	false
SIDE	Side specification (left or right)	–	'left'

Electrode Parameters 2D

Table 2.128: NODE Composite Parameters

Parameter	Description	Units	Default
BC	Carrier density boundary condition type (dirichlet or neumann)	–	'dirichlet'
END	Ending location	cm	0
MATERIAL	Contact material	–	'neutral'
NAME	Electrode name	–	'anode'
OXCHARGE	Oxide charge	–	0
OXIDEBNDRYFLAG	Oxide layer boolean	–	false
OXTHICK	Oxide thickness	cm	0
SIDE	Side specification (top, bottom, left or right)	–	'top'
START	Starting location	cm	0

Doping or Region Parameters

The DOPINGPROFILES and REGION parameters are synonyms, therefore their tables of values are identical. The use of both parameters in the same device instance could lead to unpredictable behavior.

Table 2.129: DOPINGPROFILES Composite Parameters

Parameter	Description	Units	Default
EL2		–	0
EXPRESSION		–	'none'
FILE		–	'none'
FLATX	Determines the doping shape (half-gaussian or a full gaussian)	–	0
FLATY	2D ONLY: Determines the doping shape (half-gaussian or a full gaussian)	–	0
FUNCTION	Functional form of doping region; options are uniform, gaussian, and step.	–	'uniform'
NAME		–	'none'
NMAX	Maximum value of impurity concentration	cm^{-3}	1e+15
NMAXCHOP		cm^{-3}	1e+20
NMIN	Minimum value of impurity concentration	cm^{-3}	0
SPECIES		–	'none'
TYPE	ntype or ptype	–	'ntype'
XLOC	Peak location of the doping in the x-direction	cm	0
XMAX		cm	0

Table 2.129: DOPINGPROFILES Composite Parameters

Parameter	Description	Units	Default
XMIN		cm	0
XWIDTH	Distance from nmax to nmin. This is only applicable for the function=gaussian case.	cm	0.001
YLOC	2D ONLY: Peak location of the doping in the y-direction ()	cm	0
YMAX	2D ONLY:	cm	0
YMIN	2D ONLY:	cm	0
YWIDTH	2D ONLY: Distance from nmax to nmin. This is only applicable for the function=gaussian case.	cm	0.001

Table 2.130: REGION Composite Parameters

Parameter	Description	Units	Default
EL2		–	0
EXPRESSION		–	'none'
FILE		–	'none'
FLATX	Determines the doping shape (half-gaussian or a full gaussian)	–	0
FLATY	2D ONLY: Determines the doping shape (half-gaussian or a full gaussian)	–	0
FUNCTION	Functional form of doping region; options are uniform, gaussian, and step.	–	'uniform'
NAME		–	'none'
NMAX	Maximum value of impurity concentration	cm^{-3}	1e+15
NMAXCHOP		cm^{-3}	1e+20
NMIN	Minimum value of impurity concentration	cm^{-3}	0
SPECIES		–	'none'
TYPE	ntype or ptype	–	'ntype'
XLOC	Peak location of the doping in the x-direction	cm	0
XMAX		cm	0
XMIN		cm	0
XWIDTH	Distance from nmax to nmin. This is only applicable for the function=gaussian case.	cm	0.001
YLOC	2D ONLY: Peak location of the doping in the y-direction ()	cm	0
YMAX	2D ONLY:	cm	0
YMIN	2D ONLY:	cm	0

Table 2.130: REGION Composite Parameters

Parameter	Description	Units	Default
`YWIDTH`	2D ONLY: Distance from nmax to nmin. This is only applicable for the function=gaussian case.	cm	0.001

Flat Parameters

Table 2.131: Description of the flatx, flaty doping parameters

Flatx or Flaty view	Description	1D Cross Section
`0`	Gaussian on both sides of the peak (`xloc`) location.	
`+1`	Gaussian if `x>xloc`, flat (constant at the peak value) if `x<xloc`.	
`-1`	Gaussian if `x<xloc`, flat (constant at the peak value) if `x>xloc`.	

2.4.1 Physical Models

This section contains information about physical models used in **Xyce** for TCAD devices. This includes various mobility models, expressions for calculating the effective mass for electrons and holes, an expression for intrinsic carrier concentration as a function of temperature, expressions which describe contacts to metal as well as contacts to metal-oxide-semiconductor devices.

Material Models and Parameters

This section describes some of the basic material properties that are available in **Xyce**. Described here are the models for effective mass, intrinsic carrier concentration, and the bandgap. This information is needed for the more complex models described in the mobility section (section 2.4.2) and the boundary condition section (section 2.4.2).

Effective Mass

Xyce includes functions which return the effective mass of electrons and holes for a number of semiconductor materials.

Electron Effective Mass

The electron effective mass is calculated as

$$m_{de} = (m_l^* m_t^{*2})^{1/3} \tag{2.59}$$

where m_l and m_t are the effective masses along the longitudinal and transverse directions of the ellipsoidal energy surface.

Hole Effective Mass

The hole effective mass is calculated as

$$m_{dh} = (m_{lh}^{*3/2} + m_{hh}^{*3/2})^{2/3} \tag{2.60}$$

where m_{lh} and m_{hh} are the ”light” and ”heavy” hole masses, respectively.

Intrinsic Carrier Concentration

The intrinsic carrier concentration in a semiconductor is obtained from the ”np” product

$$np = n_i^2 = N_C N_V exp(-E_g/kT) \tag{2.61}$$

or

$$n_i = \sqrt{N_C N_V} e^{-E_g/2kT} \tag{2.62}$$

The expression used in **Xyce** to calculate the intrinsic carrier concentration comes from this and is given by

$$n_i = 4.9 \times 10^{15} (\frac{m_{de} m_{dh}}{m_0^2})^{3/4} M_c^{1/2} T^{3/2} e^{-E_g/2kT} \tag{2.63}$$

where M_c is the number of equivalent minima in the conduction band for the semiconductor, m_{de} is the density-of-state effective mass for electrons, m_{dh} is the density-of-state effective mass for holes, and m_0 is the free-electron mass.

Table 2.132: Intrinsic Carrier Concentration Parameters

Semiconductor	**Symbol**	$M_c^{1/2}$	n_i **at room temperature**
Silicon	si	$\sqrt{6.00}$	$1.25x10^{10}$
Germanium	ge	2.00	$2.5x10^{13}$
Galium Arsenide	gaas	1.00	$2.0x10^{6}$

Bandgap

The bandgap is a material and temperature-dependent quantity. The bandgap model for semiconductor materials, is based on Thurmond [38]. This model is given by:

$$E_g = E_{g0} - A * \left(\frac{T^{2.0}}{T + T_{off}} \right) \tag{2.64}$$

where E_g is the bandgap (eV) and T is the temperature (K). A, E_{g0}, and T_{off} are all material-dependent constants. Insulating materials, such as silicon dioxide, are assumed to have constant bandgaps, so their bandgaps are given by:

$$E_g = E_{g0} \tag{2.65}$$

where E_{g0} is a material-dependent constant. The values for the material-dependent constants used by equations 2.64 and 2.65 are given in Table 2.133.

Table 2.133: Bandgap constants

Material	**Symbol**	E_{g0} **(eV)**	A	T_{off} **(K)**

Table 2.133: Bandgap constants

Material	Symbol	E_{g0} (eV)	A	T_{off} (K)
Silicon	si	1.17	4.73e-4	636.0
Germanium	ge	0.7437	4.774e-4	235.0
Galium Arsenide	gaas	1.519	5.405e-4	204.0
Silicon Dioxide	sio2	9.00	NA	NA
Silicon Nitride	wdi	4.7	NA	NA
Sapphire	cu	4.7	NA	NA

2.4.2 Mobility Models

A number of mobility models are included in **Xyce**. The analytic, arora, and carrier-carrier scattering models are considered to be low-field mobility models. The Lombardi surface mobility model is a transverse-field dependent model which also incorporates the mobility of the bulk silicon.

Analytic Mobility

This is a concentration- and temperature-dependent empirical mobility model, based on the work of Caughey and Thomas [39], which combines the effects of lattice scattering and ionized impurity scattering. The equation for the mobility of electrons is:

$$\mu_{0n} = \mu_{nmin} + \frac{\mu_{nmax}(\frac{T}{T_{ref}})^{nun} - \mu_{nmin}}{1 + (\frac{T}{T_{ref}})^{xin}(N_{total}/N_n^{ref})^{\alpha_n}} \tag{2.66}$$

and the equation for the mobility of holes is:

$$\mu_{0p} = \mu_{pmin} + \frac{\mu_{pmax}(\frac{T}{T_{ref}})^{nup} - \mu_{pmin}}{1 + (\frac{T}{T_{ref}})^{xip}(N_{total}/N_p^{ref})^{\alpha_p}} \tag{2.67}$$

where N_{total} is the local total impurity concentration (in $\#/cm^3$), T_{ref} is a reference temperature (300.15K), and T is the temperature (in degrees K). The parameters N_n^{ref} and N_p^{ref} are reference values for the doping concentration. The analytic mobility model can be selected by using the statement ”mobmodel=analytic” in the netlist.

The parameters for the analytic mobility model are given in Table 2.134.

Table 2.134: Analytic Mobility Parameters

Parameter	Silicon	GaAs
μ_{nmin}	55.24	0.0
μ_{nmax}	1429.23	8500.0
N_n^{ref}	1.072e17	1.69e17
nun	-2.3	-1.0
xin	-3.8	0.0
α_n	0.73	0.436
μ_{pmin}	49.70	0.0
μ_{pmax}	479.37	400.0
N_p^{ref}	1.606e17	2.75e17
nup	-2.2	-2.1
xip	-3.7	0.0
α_p	0.70	0.395

Arora Mobility

This mobility model is also an analytic model which depends on impurity concentration and temperature. It comes from the work of Arora, *et al.* [40] and is based on both experimental data and the modified Brooks-Herring theory of mobility. The equation for the mobility of electrons is:

$$\mu_{0n} = \mu_{n1}(\frac{T}{T_{ref}})^{exn1} + \frac{\mu_{n2}(\frac{T}{T_{ref}})^{exn2}}{1 + (\frac{N_{total}}{Cn(\frac{T}{T_{ref}})^{exn3}})^{\alpha_n}} \tag{2.68}$$

and the equation for the mobility of holes is:

$$\mu_{0p} = \mu_{p1}(\frac{T}{T_{ref}})^{exp1} + \frac{\mu_{p2}(\frac{T}{T_{ref}})^{exp2}}{1 + (\frac{N_{total}}{Cp(\frac{T}{T_{ref}})^{exp3}})^{\alpha_p}} \tag{2.69}$$

where

$$\alpha_n = An(\frac{T}{T_{ref}})^{exn4} \tag{2.70}$$

and

$$\alpha_p = Ap(\frac{T}{T_{ref}})^{exp4} \tag{2.71}$$

The Arora mobility model can be selected by including the statement ”mobmodel=arora” in the netlist. The parameters for the arora mobility model are given in Table 2.135.

Table 2.135: Arora Mobility Parameters

Parameter	Silicon	GaAs
μ_{n1}	88.0	8.5e3
μ_{n2}	1252.0	0.0
Cn	1.26e17	1.26e17
An	0.88	0.0
exn1	-0.57	-0.57
exn2	-2.33	0.0
exn3	2.4	0.0
exn4	-0.146	0.0
μ_{p1}	54.3	4e2
μ_{p2}	407.0	0.0
Cp	2.35e17	2.35e17
Ap	0.88	0.0
exp1	-0.57	0.0
exp2	-2.23	0.0
exp3	2.4	0.0
exp4	-0.146	0.0

Carrier-Carrier Scattering Mobility

This mobility model is based on the work of Dorkel and Leturq [41]. It incorporates carrier-carrier scattering effects, which are important when high concentrations of electrons and holes are present in the device. This model also takes lattice scattering and ionized impurity scattering into account. One important difference between the carrier-carrier scattering mobility model and the two previous mobility models (analytic and arora models) is that the carrier-carrier scattering mobility model depends upon the actual carrier concentrations in the device. This model is important for modeling breakdown as well as various radiation effects, which often result in very high carrier densities.

The expressions for the carrier-carrier model are as follows:

$$\mu_L = \mu_{L0}(\frac{T}{T_{ref}})^{-\alpha} \tag{2.72}$$

where μ_L is the lattice mobility, which has to do with scattering due to acoustic phonons.

$$\mu_I = \frac{AT^{3/2}}{N}[ln(1+\frac{BT^2}{N}) - \frac{BT^2}{N+BT^2}]^{-1} \tag{2.73}$$

where μ_I is the impurity mobility which is related to the interactions between the carriers and the ionized impurities.

$$\mu_{ccs} = \frac{2\times 10^{17}T^{3/2}}{\sqrt{pn}}[ln(1+8.28\times 10^8 T^2(pn)^{-1/3})]^{-1} \tag{2.74}$$

where μ_{ccs} is the carrier-carrier scattering mobility, which is very important when both types of carriers are at high concentration.

$$X = \sqrt{\frac{6\mu_L(\mu_I+\mu_{ccs})}{\mu_I\mu_{ccs}}} \tag{2.75}$$

is an intermediate term and

$$\mu = \mu_L[\frac{1.025}{1+(X/1.68)^{1.43}} - 0.025] \tag{2.76}$$

is the carrier mobility. The carrier-carrier scattering mobility can be selected by including the statement ”mobmobel=carr” in the netlist. The parameters for the carrier-carrier mobility model are given in Table 2.136.

Table 2.136: Carrier-Carrier Mobility Parameters

Parameter	Carrier	Silicon	GaAs
Al	e^-	1430.0	8.50e3
Bl	e^-	-2.2	0.0
Ai	e^-	4.61e17	4.61e17
Bi	e^-	1.52e15	1.52e15
Al	h^+	495.0	4.0e2
Bl	h^+	-2.2	0.0
Ai	h^+	1.00e17	1.00e17
Bi	h^+	6.25e14	6.25e14

Lombardi Surface Mobility Model

This mobility model combines expressions for mobility at the semiconductor-oxide interface and in bulk silicon. It is based on the work of Lombardi *et al.* [42]. The overall mobility is found using Mathiessen's rule:

$$\frac{1}{\mu} = \frac{1}{\mu_{ac}} + \frac{1}{\mu_b} + \frac{1}{\mu_{sr}} \tag{2.77}$$

where μ_{ac} is the carrier mobility due to scattering with surface acoustic phonons, μ_b is the carrier mobility in bulk silicon, and μ_{sr} is the carrier mobility limited by surface roughness scattering.

The Lombardi model is a more physics-based surface mobility model. It is a semi-empirical model for carrier mobility, and the expressions for the individual scattering mechanisms were extracted from experimental data taken in appropriate experimental conditions.

The expressions used in this model are given below:

$$\mu_{ac,n} = \frac{bn}{E_\perp} + \frac{cnN^{exn4}}{T(E_\perp)^{1/3}} \tag{2.78}$$

is the expression for electron mobility for acoustic phonon scattering,

$$\mu_{ac,p} = \frac{bp}{E_\perp} + \frac{cpN^{exp4}}{T(E_\perp)^{1/3}} \tag{2.79}$$

is the expression for hole mobility for acoustic phonon scattering,

$$\mu_{b,n} = \mu_{n0} + \frac{\mu_{max,n} - \mu_{n0}}{1 + (N/crn)^{exn1}} - \frac{\mu_{n1}}{1 + (csn/N)^{exn2}} \tag{2.80}$$

is the expression for bulk mobility for electrons, where

$$\mu_{max,n} = \mu_{n2}(\frac{T}{T_{ref}})^{-exn3} \tag{2.81}$$

and

$$\mu_{b,p} = \mu_{p0}exp(-pc/N) + \frac{\mu_{max,p}}{1+(N/crp)^{exp1}} - \frac{\mu_{p1}}{1+(csp/N)^{exp2}} \tag{2.82}$$

is the expression for bulk mobility for holes, where

$$\mu_{max,p} = \mu_{p2}(\frac{T}{T_{ref}})^{-exp3} \tag{2.83}$$

The expression for electrons for surface roughness scattering is

$$\mu_{sr,n} = (\frac{dn}{E_{\perp}^{exn8}}) \tag{2.84}$$

and the expression for holes for surface roughness scattering is

$$\mu_{sr,p} = (\frac{dp}{E_{\perp}^{exp8}}) \tag{2.85}$$

The parameters for the lombardi surface mobility model are given in Table2.137.

Table 2.137: Lombardi Surface Mobility Parameters

Parameter	Silicon	GaAs
μ_{n0}	52.2	0.0
μ_{n1}	43.4	0.0
μ_{n2}	1417.0	1e6
crn	9.68e16	9.68e16
csn	3.43e20	0.0
bn	4.75e7	1e10
cn	1.74e5	0.0
dn	5.82e14	1e6
exn1	0.680	0.0
exn2	2.0	0.0
exn3	2.5	0.0
exn4	0.125	0.0
exn8	2.0	0.0
μ_{p0}	44.9	0.0
μ_{p1}	29.0	0.0
μ_{p2}	470.5	1.0
crp	2.23e17	2.23e17
csp	6.1e20	0.0
bp	9.93e6	1e10
cp	8.84e5	0.0
dp	2.05e14	1e6
exp1	0.719	0.0
exp2	2.0	0.0
exp3	2.2	0.0
exp4	0.0317	0.0
exp8	2.0	0.0
pc	9.23e16	0.0

Edge Mobilities

Mobility values are calculated along the edge connecting two nodes. In the case of the analytic, arora, and surface mobility models, the edge mobilities are calculated by taking the average of the mobilities at the two nodes. Then, the mobility along the edge connecting nodes 1 and 2 is:

$$\mu_{edge} = (\mu[1] + \mu[2])/2.0 \tag{2.86}$$

In the case of the carrier-carrier scattering mobility, the edge mobilities were calculated differently. The electron and hole concentrations were first calculated at the midpoint of the edge using a ”product” average and then these values of ”n” and ”p” were used in the function to calculate the mobility at the midpoint of the edge. For example, if n[1] and n[2] are the electron concentrations at nodes 1 and 2, the electron concentration along the edge is given by:

$$n_{edge} = \sqrt{n[1] * n[2]} \tag{2.87}$$

Subsequently, the mobility at the midpoint of an edge is found by using the values of electron and hole concentration at the midpoint of the edge when calling the function which returns the mobility, calcMob().

$$\mu_{n,edge}^{carrier} = f(n_{edge}) \tag{2.88}$$

This method makes more sense, especially when the electron and hole concentrations vary by several orders of magnitude. Then it approximates taking the average of the logarithms.

Boundary Conditions for Electrode Contacts

This section describes various boundary conditions that need to be applied to the semiconductor boundary. **Xyce** is predominantly an analog circuit simulator, and the TCAD (PDE-based) device modeling that has been implemented in **Xyce** takes external circuit information as input. This input consists of voltages and currents which are applied as boundary conditions to the semiconductor domain.

The physical connection from the circuit to the device generally includes a variety of materials, including metals and oxides. Electrical differences between the semiconductor and the contact material can result in a potential barrier that must be included in the imposed voltage boundary condition.

There are three general types of contacts between the circuit and the TCAD device that are handled by **Xyce**. The first is the ”neutral” contact, in which it is simply assumed that the electrode material does not impose any addition potential barrier to that of the Fermi level differences in the semiconductor. The second is the Schottky contact, in which the electrode is a specified metal, and a potential barrier is imposed to account for the workfunction difference between the metal and the semiconductor. The last type of contact is the metal-oxide-semiconductor contact, in which the workfunction difference, and the voltage drop across the oxide must be accounted for.

Neutral Contacts

A neutral contact refers to the case in which the contact is made to the semiconductor itself, and barrier heights due to material differences are not considered. This is the simplest type of contact in **Xyce**, and problems which use this type of contact are generally easier to solve, compared with other types of contacts. In this case, the boundary is given by

$$V_{bc} = V_{ckt} + V_{bi} \tag{2.89}$$

where V_{ckt} is the potential applied by the circuit and V_{bi} is the "built-in" potential of the semiconductor. For a p-type substrate, the built-in potential is given by

$$V_{bi} = -\frac{kT}{q} ln(\frac{N_A}{n_i}) \tag{2.90}$$

and for an n-type substrate, the built-in potential is given by

$$V_{bi} = \frac{kT}{q} ln(\frac{N_D}{n_i}) \tag{2.91}$$

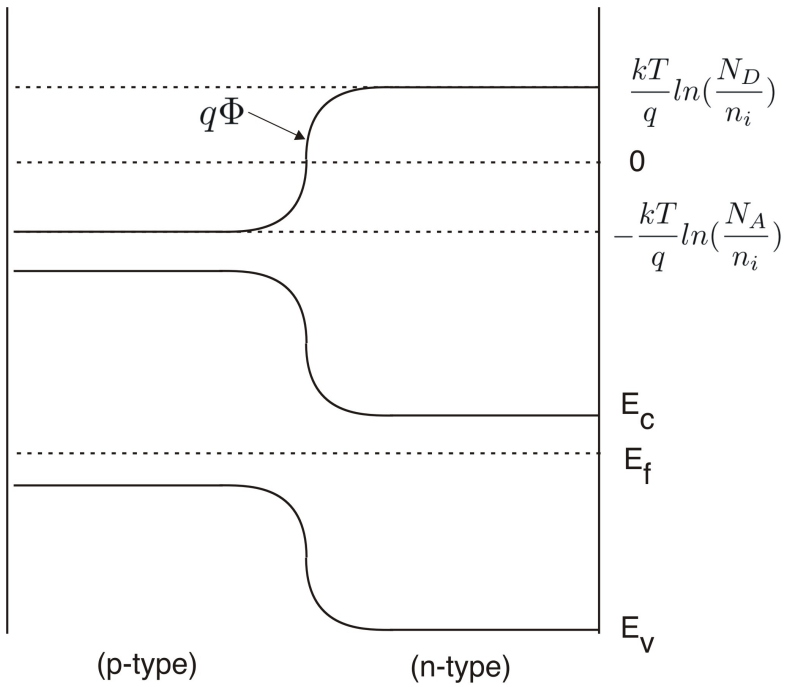

Figure 2.6. Neutral Contacts.

V_{bi} represents the extent of the energy band bending due to the doping of a device. While most of the dramatic changes will happen away from the contact, near junctions, it is still incorporated into the voltage boundary condition to maintain a flat potential near the contacts. Figure 2.6 shows the energy band variation across a PN junction, and the corresponding electrostatic potential. This variation is due to the internal physics of the device, and needs to be there even in the event of zero applied voltage. This is partially enforced by the solution to Poisson's equation, and also by the application of equation 2.89.

Schottky Contacts

In the case of a metal-semiconductor contact, it is necessary to add the workfunction difference, Φ_{ms}, to the potential in the semiconductor [43]. Φ_m is a constant for a given metal, and Φ_s is a

function of the doping in the semiconductor. The workfunction potential, Φ, when multiplied by q, is the difference between the Fermi level and vacuum in the material. In essence, the workfunction difference represents the distance between the Fermi level in the metal and the Fermi level in the semiconductor when considering the individual band structures.

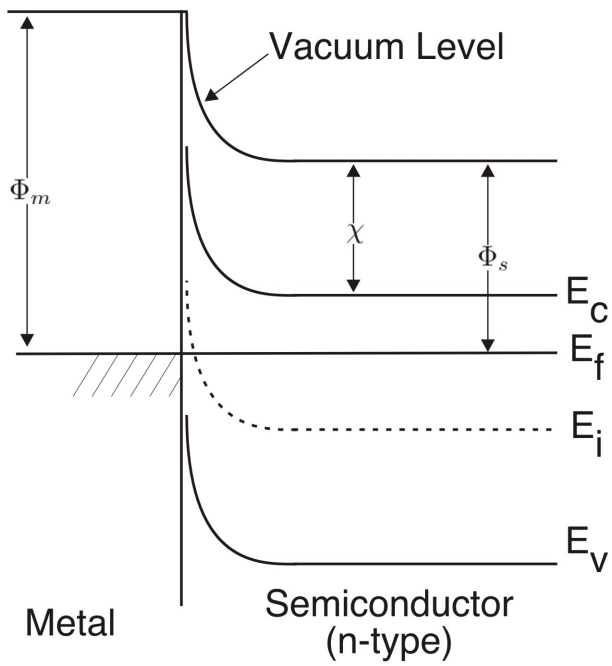

Figure 2.7. Schottky Contact, N-type.

In the case of an n-type semiconductor, the semiconductor workfunction can be represented as

$$\Phi_s = \chi + (E_C - E_{FS})/q \tag{2.92}$$

where χ is the electron affinity in the semiconductor and qχ is the distance between the conduction band and vacuum in the semiconductor. E_C is the conduction band energy and E_{FS} is the Fermi level of the semiconductor. Rewriting this expression in terms of the doping concentration, it becomes

$$\Phi_s = \chi + E_g/2 - V_t ln(\frac{N_d}{n_i}) \tag{2.93}$$

In the case of a p-type semiconductor, the semiconductor workfunction can be represented as

$$\Phi_s = \chi + E_g/2 + (E_i - E_{FS})/q \tag{2.94}$$

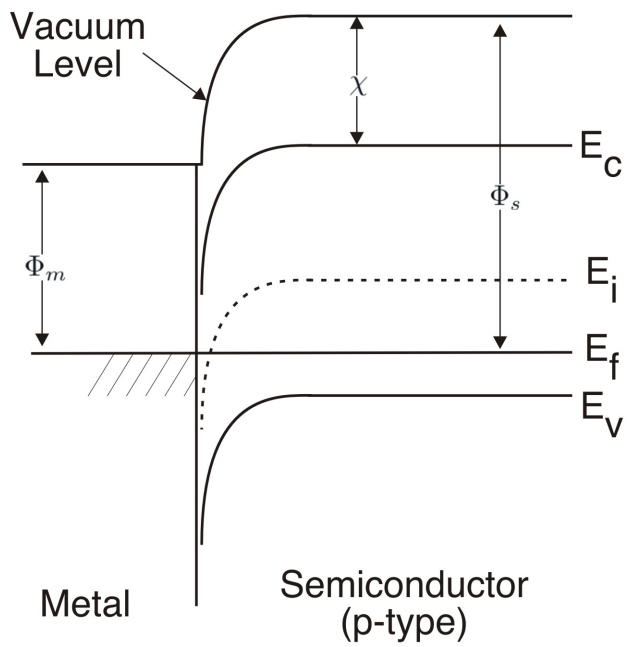

Figure 2.8. Schottky Contact, P-type.

where E_i is the intrinsic value of the Fermi level, and can be approximated as the halfway point between the conduction band (E_C) and the valance band (E_V). Rewriting this expression in terms of the doping concentration

$$\Phi_s = \chi + E_g/2 + V_t ln(\frac{N_a}{n_i}) \tag{2.95}$$

For the TCAD devices in **Xyce**, for a node at a metal-semiconductor contact, the quantity $\Phi_m - \Phi_s$ is added to the potential at the node to account for the metal-semiconductor barrier. The current values of metal workfunctions used in **Xyce** are given in Table 2.138. The values for electron affinity are given in Table 2.139. The boundary condition for a metal electrode in **Xyce** is given by

$$V_{bc} = V_{ckt} + V_{bi} + \Phi_{ms} \tag{2.96}$$

where V_{ckt} is the potential applied by the circuit to the electrode and V_{bi} is the ”built-in” potential of the semiconductor, a function of the semiconductor doping.

Table 2.138: Material workfunction values

Metal	Symbol	Workfunction, Φ_m (Volts)
aluminum	al	4.10
p+-polysilicon	ppoly	5.25
n+-polysilicon	npoly	4.17
molybdenum	mo	4.53
tungsten	w	4.63
molybdenum disilicide	modi	4.80
tungsten disilicide	wdi	4.80
copper	cu	4.25
platinum	pt	5.30
gold	au	4.80

Table 2.139: Electron affinities

Semiconductor	Symbol	Electron Affinity, χ (Volts)
Silicon	si	4.17
Germanium	ge	4.00
Galium Arsenide	gaas	4.07
Silicon Dioxide	sio2	0.97
Nitride	nitride	0.97
Sapphire	sapphire	0.97

Metal-Oxide-Semiconductor Contacts

To date in **Xyce**, only semiconductor material is included in the PDE solution domain. Metals and oxide materials are only included through boundary conditions. This is an adequate approach for a lot of problems. For some problems (such as modeling of low-dose radiation effects) modeling the oxide in more detail, as a PDE, will become necessary. However, since oxides are usually very thin, compared with the semiconductor domain, meshing both materials as part of the same simulation is difficult. Therefore, incorporating the effects of a gate oxide as part of the gate boundary condition is a reasonable approach.

In the case of a contact to a metal-oxide-semiconductor structure, the separation of the Fermi energies in the metal and the semiconductor at equilibrium is due to two effects: the workfunction difference between the metal and the semiconductor, and the effective interface charge. These two effects cause the bands to bend at the surface in equilibrium. The flatband voltage is the sum of these two terms [43]:

$$V_{FB} = \Phi_{ms} - \frac{Q_i}{C_i} \tag{2.97}$$

where Φ_{ms} is the metal-semiconductor workfunction difference, Q_i is the value of interface charge (in C/cm^2), and C_i is the oxide capacitance per unit area, which is given by

$$C_i = \frac{\epsilon_{ox}\epsilon_0}{x_o} \tag{2.98}$$

The voltage V_{FB} is the amount of bias which, when applied to the gate, causes the electron energy bands to be flat. This is the potential that is added to a boundary node in **Xyce** to account for a metal-oxide-semiconductor barrier. The overall boundary condition for a contact to a metal-oxide-semiconductor structure is given by

$$V_{bc} = V_{ckt} + V_{bi} + \Phi_{ms} - Q_i/C_i \tag{2.99}$$

where V_{ckt} is the potential applied by the circuit and V_{bi} is the ”built-in” potential of the semiconductor.

NMOS Device

The default NMOS device used in **Xyce** has a substrate doping concentration of $1.0 \times 10^{16}/cm^3$ and an oxide thickness of $1.0 \times 10^{-6}cm$. Since the ideal threshold voltage V_T is given by

$$V_T = 2\phi_F + \frac{\epsilon_s}{\epsilon_{ox}} x_o \sqrt{\frac{2qN_A\phi_F}{\epsilon_s\epsilon_0}} \tag{2.100}$$

V_T is equal to 0.892 V. for this device. Note that

$$\phi_F = \frac{1}{q}[E_i(bulk) - E_F] = \frac{kT}{q} ln(\frac{N_A}{n_i}) \tag{2.101}$$

for a p-type semiconductor substrate and

$$\phi_F = -\frac{kT}{q} ln(\frac{N_D}{n_i}) \tag{2.102}$$

for an n-type substrate.

3. Command Line Arguments

Xyce supports a handful of command line arguments which must be given *before* the netlist filename. While most of these are intended for general use, others simply give access to new features that, while supported, are not enabled by default. The general usage is as follows:

```
Xyce [arguments] <netlist filename>
```

Table 3.1 gives a list of supported command line options.[1]

Table 3.1: List of **Xyce** command line arguments.

Argument	Description	Usage	Default
-h	Help option. Prints usage and exits.	`-h`	-
-v	Prints the version banner and exits.	`-v`	-
-license	Prints the license text and exits.	`-license`	-
-capabilities	Prints a list of compiled-in options and exits.	`-capabilities`	-
-delim	Set the output file field delimiter.	`-delim <TAB|COMMA|string>`	-
-o	Place the results into specified file.	`-o <file>`	Results output file name based on netlist file name.
-l	Place the log output into specified file.	`-l <file>`	Log output sent to standard out.
-r	Output a binary rawfile.	`-r <file>`	No rawfile written.
-a	Use with `-r` to output a readable (ascii) rawfile.	`-r <file> -a`	Default rawfile is binary.
-nox	Use the NOX nonlinear solver.	`-nox <ON|OFF>`	on
-linsolv	Set the linear solver.	`-linsolv <KLU|AZTECOO>`	KLU(serial) and AztecOO(parallel)
-param	Print a terse summary of model and/or device parameters.	`-param`	-

[1] Note that the "-h" option might list command line options not present in this table. These extra options are generally deprecated and should not be used. Only the options listed in the table are considered supported features.

Table 3.1: List of **Xyce** command line arguments.

Argument	Description	Usage	Default
-prf	Specify a file with simulation parameters.	`-prf <filename>`	-
-rsf	Specify a file to save simulation responses functions.	`-rsf <filename>`	-
-remeasure	Recompute .measure results with existing data.	`-remeasure`	-
-syntax	Check netlist syntax then exit.	`-syntax`	-
-norun	Check netlist syntax and topology, then exit.	`-norun`	-
-randseed	Set random number seed for expression library's random number functions.	`-randseed <number>`	If not provided, Xyce will select a seed using the system "time" function.
-maxord	Maximum time integration order.	`-maxord <1..5>`	-
-jacobian_test	Jacobian matrix diagnostic.	`-jacobian_test`	-

A few other command line options are available that are typically only used in Xyce development. For example the options `-param`, `-info`, `-doc` and `-doc_cat` are used to generate the device tables in this guide. The options, `-jacobian_test` and `-namesfile` can be useful in debugging new devices in **Xyce**.

4. Runtime Environment

4.1 Running **Xyce** in Serial

After ensuring that the directory into which **Xyce** was installed is in your PATH variable, one merely executes the code by running the command, `Xyce` with the desired netlist name appended.

4.2 Running **Xyce** in Parallel

Open MPI must be installed on the host machine. It may be download from

`http://www.open-mpi.org/`. Consult the documentation for help with installation.

After ensuring that the both the directory into which **Xyce** was installed and the directory in which mpirun is found are in your PATH variable, one merely executes the code by running the command, `mpirun [mpirun options] Xyce [xyce options]` with the desired netlist name appended.

4.3 Running **Xyce** on Sandia HPC and CEE Platforms

This version of **Xyce** has been installed centrally on Sandia HPC and CEE platforms, and requires metagroup access. Contact the **Xyce** team for details on how to obtain this access.

Once you have registered for metagroup membership, the central installs of **Xyce** may be accessed by a module load.

`module load Xyce` adds all required modules and sets all required environment variables to access the normal version of **Xyce**. `module load XyceRad` does the same thing for the version **Xyce** containing Sandia proprietary models.

`module help Xyce` provides some additional information about what the module does.

Consult the system documentation for help with submitting jobs on these platforms.

`https://computing.sandia.gov/`

5. Setting Convergence Parameters for **Xyce**

Because the solution algorithms and methods within **Xyce** are different than those used by other circuit simulation tools (e.g., SPICE), the overall convergence behavior is sometimes different, as are the parameters which control this behavior.

5.1 Adjusting Transient Analysis Error Tolerances

Xyce uses a variable order trapezoid integration as its default scheme, and this method may also be requested explicitly with the **TIMEINT** option `METHOD=trap` or `METHOD=7`. Trapezoid time-stepping is second order accurate and does not have any numerical dissipation in its local truncation error. Variable order trapezoid integration dynamically uses Backward Euler (BE) and trapezoid rule. When `ERROPTION=1` is set with `METHOD=7`, trapezoid rule is used almost exclusively (BE only used at breakpoints). See table 2.3 for details.

Another time integration option is the second-order Gear method. It may be selected with the **TIMEINT** option `METHOD=gear` or `METHOD=8`. See table 2.3 for details.

5.1.1 Setting RELTOL and ABSTOL

In **Xyce**, both the time integration package and the nonlinear solver package have **RELTOL** and **ABSTOL** settings. Some general guidelines for settings parameters are [44]:

- Use the *same* **RELTOL** and **ABSTOL** values for both the **TIMEINT** and the **NONLIN-TRAN .OPTIONS** statements.
- For a conservative approach (i.e., safe), set `RELTOL=1.0E-(`m`+1)` where m is the desired number of significant digits of accuracy.
- Set **ABSTOL** to the smallest value at which the solution components (either voltage or current) are essentially insignificant.
- Note that the above suggests that **ABSTOL** $<$ **RELTOL**.

The current defaults for these parameters are `ABSTOL=1.0E-6` and `RELTOL = 1.0E-3`. For a complete list of the time integration parameters, see chapter 2.1.

5.2 Adjusting Nonlinear Solver Parameters (in transient mode)

In **Xyce**, the nonlinear solver options for transient analysis are set using the `.OPTIONS NONLIN-TRAN` line in a netlist. This subsection gives some guidelines for setting this parameters.

- For guidelines on setting **RELTOL** and **ABSTOL**, see above.
- **RHSTOL** – This is the maximum residual error for each nonlinear solution. **Xyce** uses this as a "safety" check on nonlinear convergence. Typically, `1.0E-2` (the default) works well.
- **DELTAXTOL** – This is the weighted update norm tolerance and is the primary check for nonlinear convergence. Since it is weighted (i.e., normalized using **RELTOL** and **ABSTOL**), a value of `1.0` would give it the same accuracy as the time integrator. For robustness, the default is `0.33` but sometimes a value of `0.1` may help prevent "time-step too small" errors. A value of `0.01` is considered quite small.
- **MAXSTEP** – This is the maximum number of Newton (nonlinear) steps for each nonlinear solve. In transient analysis, the default is `20` but can be increased to help prevent "time-step too small" errors. This is roughly equivalent to **ITL4** in SPICE.

6. Quick Reference for Users of Other SPICE Circuit Simulators

This chapter describes many of the differences between **Xyce** and other SPICE-like circuit simulaters. The primary focus is on the difference between Orcad PSpice and **Xyce**, with an eye towards providing the ability for those familiar with using PSpice to begin using **Xyce** quickly.

This chapter is likely not complete, and **Xyce** users might also consult specific sections of this Reference Guide about particular **Xyce** commands. Those sections may have additional information on Xyce's incompatibilities with other circuit simulators, and how to work around them.

6.1 Differences Between **Xyce** and PSpice

This section is focused on the differences between **Xyce** and PSpice. However, some of this discussion also applies to other SPICE-like circuit simulators.

6.1.1 Command Line Options

Command line arguments are supported in **Xyce** but they are different than those of PSpice. For a complete reference, see Chapter 3.

6.1.2 Device Support

Most, but not all, devices commonly found in other circuit simulation tools are supported. **Xyce** also contains enhanced versions of many semiconductor devices that simulate various environmental effects. For the complete list, please see the Analog Device Summary in Table 2.23.

6.1.3 Netlist Support

For the specific devices or models that are supported in **Xyce**, most of the standard netlist inputs are the same as those in standard SPICE. However, the **.OPTIONS** command has several additional features used to expose capabilities specific to **Xyce**. In particular, **Xyce** does not support the standard PSpice format **.OPTIONS** line in netlists. Instead, options for each supported package are called according to the following format.

General Form `.OPTIONS <pkg> [<tag>=<value>]*`

Arguments and Options

`DEVICE`
: Device Model

`TIMEINT`
: Time Integration

`NONLIN`
: Nonlinear Solver

`NONLIN-TRAN`
: Transient Nonlinear Solver

`NONLIN-HB`
: HB Nonlinear Solver

`LOCA`
: Continuation/Bifurcation Tracking

`LINSOL`
: Linear Solver

`LINSOL-HB`
: HB Linear Solver

`OUTPUT`
: Output

`RESTART`
: Restart

`HBINT`
: Harmonic Balance (HB)

`SENSITIVITY`
: Direct and Adjoint sensitivity analysis

For a complete description of the supported options in **Xyce**, see section 2.1.18.

Xyce does not support the "**.PROBE**" statement. Output of Probe-format files, in .csd format, that are readable by PSpice is done using the **.PRINT** netlist statement. See section 2.1.23 for the syntax for `FORMAT=PROBE`.

Xyce does not support PSpice style abbreviations in the **.PRINT** statement. For example, to print out the value of the voltage at node `A` in a transient simulation you must request `.PRINT TRAN V(A)`, not `.PRINT TRAN A`. **Xyce** also does not support `N()` as a synonym for `V()` on `.PRINT` lines.

6.1.4 Converting PSpice ABM Models for Use in **Xyce**

Xyce is almost fully compatible with PSpice with respect to analog behavioral models. This includes the `E`, `F`, `G`, and `H` device types. A notable exception to this compatibility is in the use of

lead and device currents in expressions used in controlled source definitions. That feature is not supported in **Xyce**.

6.1.5 Usage of .STEP Analysis

The implementation of .STEP in **Xyce** is not the same as that of PSpice. See section 2.1.27 for the syntax and function of the .STEP function in **Xyce**.

Global .PARAM Sweeps

PSpice also supports sweeps over variables specified in .PARAM lines. This is not supported in **Xyce**. For example, this block of text will not work in **Xyce**:

```
VAB 2 0 5
VAC 1 0 {variable}
.param variable=0
.step param variable 0 5 1
.dc VAB 4 5 1
```

An equivalent block of code that will work in **Xyce** replaces the `.param` with a `.global_param`, and removes the `param` keyword from the `.step` line:

```
VAB 2 0 5
VAC 1 0 {variable}
.global_param variable=0
.step variable 0 5 1
.dc VAB 4 5 1
```

Model Parameter Sweeps

PSpice requires extra keywords to apply a .STEP statement to a model parameter. **Xyce** handles model parameters differently, and is actually somewhat more flexible than PSpice. Unfortunately, this means that the two specifications are not compatible.

A model parameter in PSpice would be handled like this:

```
R1 1 2 RMOD 1
.model RMOD RES(R=30)
.step RES RMOD(R) 30 50 5
```

The equivalent way to specify this in **Xyce** would be:

```
R1 1 2 RMOD 1
.model RMOD RES(R=30)
.step RMOD:R 30 50 5
```

Note that **Xyce** does not require the RES keyword on the .STEP line. In PSpice, this keyword is needed to specify what type of model is being used. **Xyce** actually has more flexibility than PSpice in this regard—any model or instance variable can be set on the .STEP line using the same syntax.

Example: `.step D101:IS 1.0e-3 5.0e-3 1.0e-3`

In this example, D101 is the name of a model or instance, and IS is the name of the parameter within that model or instance.

6.1.6 Behavioral Digital Devices

There are at least four significant differences. First, the instance line syntax for the **Xyce** digital behavioral devices differs from PSpice. Second, **Xyce** uses one model card for the timing and Input/Output (I/O) characteristics, while PSpice uses separate model cards for timing and I/O characteristics. The model cards also have different parameters. Third, **Xyce**does support the DIGINITSTATE option. However, it has a different default value than in PSpice. So, the DCOP calculations for flip-flops and latches may be different in some cases between **Xyce** and PSpice. Finally, closely spaced input transitions to a gate (e.g., ones spaced by less than the DELAY parameter of the **Xyce** model) may produce different behaviors in **Xyce** and PSpice. Please consult Section 2.3.25 for more details.

6.1.7 Power Dissipation

PSpice supports printing the power dissipation of a device via syntax like W(<name>). At this time, not all **Xyce** devices support power calculations. In addition, the **Xyce** results for the FET semiconductor devices (J, M and Z devices) may differ from the PSpice results. Consult the Features Supported by Xyce Device Models table in Section 2.3 and the individual sections on each device for more details. Additional limitations on lead current and power calculations in **Xyce** are given in Section 2.3.3.

Example work-arounds are as follows, using either the node voltage at Node 2 or the lead current through Resistor 2:

```
.DC V1 0 5 1
.param R2VAL=10
V1 1 0 5V
R1 1 2 10
R2 2 0 {R2VAL}
.PRINT DC V(2) {V(2)*V(2)/R2VAL} {I(R2)*I(R2)*R2VAL}
```

6.1.8 Dependent Sources with TABLE Syntax

The documented PSpice syntax for the TABLE form of the E and G sources is identical to the **Xyce** syntax for those two devices. As an example, consider this E-source netlist line which conforms to

the documented PSpice and Xyce syntaxes:

```
E5  5 0 TABLE V(1,0) = (-2,-3) (2,3)
```

There is an equal sign between the expression {V(1,0)} and the list of value pairs (e.g., before (-2,-3)). There is also a comma between the two values in each set of value pairs. However, it has been observed that some PSpice versions will accept variants of the documented PSpice syntax. As examples, PSpice might use this TABLE syntax, where the equal sign between the expression and the list of value pairs is missing and there is an extra set of parentheses around the list of value pairs:

```
TABLE {EXPR} ((x1,y1) (x2,y2) ... (xn, yn))
```

PSpice might also specify the TABLE syntax without the commas between the two values in each set of value-pairs. For example, this is a legal syntax in some PSpice versions:

```
TABLE {EXPR} = (x1 y1) (x2 y2) ... (xn yn)
```

So, the generic solution is to change these alternative PSpice syntaxes (and possibly others) to conform with the **Xyce** E and G source TABLE syntax, which is (see also Sections 2.3.11 and 2.3.13):

```
TABLE {EXPR} = (x1,y1) (x2,y2) ... (xn, yn)
```

6.1.9 MODEL STATEMENTS

In PSpice, some .MODEL statements may have commas separating the list of parameters, which causes problems in **Xyce**. A simple workaround is to replace those commas with spaces in the corresponding **Xyce** .MODEL statements.

In PSpice, some .MODEL statements may not have parentheses surrounding the list of parameters. While Xyce also does not require parentheses in model cards, parentheses are accepted. The only **Xyce** requirement is that if they are used then they must be paired with a left parenthesis before all of the parameters and a right parentheses after all of the parameters. Unmatched parentheses are an error in **Xyce**.

6.1.10 .NODESET and .IC Statements

Xyce and PSpice differ in their capabilities to handle .NODESET and .IC statements in subcircuits. See sections 2.1.15 and 2.1.10 for more details.

6.1.11 Piecewise Linear Sources

The preferred **Xyce** syntax for PWL sources does not use parentheses or commas within the time-voltage pair listing. See Section 2.3.9 for more details.

The **Xyce** PWL source does not support the PSpice `.IN` format for file input. See Section 2.3.9 for the ASCII text and `.csv` formats supported by **Xyce** for file input.

The **Xyce** repeat `R=<value>` syntax for PWL sources is not compatible with the PSpice `REPEAT` syntax for PWL sources. Some work-arounds are as follows. This PSpice `REPEAT FOREVER` syntax:

```
VPWL1 1 0 PWL REPEAT FOREVER (0,0) (0.5,1) (1,0)
+ ENDREPEAT
```

is equivalent to this **Xyce** syntax:

```
VPWL1 1 0 PWL 0 0 0.5 1 1 0 R=0
```

Similarly, if the PSpice source has its time-voltage pairs in a `.csv` file, and the specified waveform starts at time=0, then this PSpice syntax:

```
VPWL2 2 0 PWL
+ REPEAT FOREVER
+ FILE "data.csv"
+ ENDREPEAT
```

is equivalent to this **Xyce** syntax:

```
VPWL2 2 0 PWL file "data.csv" R=0
```

For more general PSpice `REPEAT` syntaxes, and especially for the PSpice `REPEAT for N` syntax, the user might have to manually duplicate the PSpice waveform in a `.csv` file.

6.1.12 Additional differences

Some other differences between **Xyce** and PSpice are described in Table 6.1. Users should also consult Table 6.2, since that table lists more general incompatibilities that span multiple circuit simulators.

Table 6.1: Incompatibilities with PSpice.

Issue	Comment
`.VECTOR`, `.WATCH`, and `.PLOT` output control analysis are not supported.	**Xyce** does not support these commands.
`.PZ` analysis is not supported.	**Xyce** does not support this command.
`.DISTO` analysis is not supported.	**Xyce** does not support this command.
`.TF` analysis is not supported.	**Xyce** does not support this command.
`.SENS` analysis is supported, but has a different syntax than PSpice.	The **Xyce** version of `.SENS` requires that the user specify exactly which parameters are the subject of the sensitivity analysis. Additionally, **Xyce** can compute sensitivities in transient as well as the `.DC` case (unlike PSpice).
`.NOISE` analysis is supported, but not all devices supported.	The **Xyce** version of `.NOISE` is new enough that not all noise models have been implemented.
`.MC` and `.WCASE` statistical analyses are not supported.	**Xyce** does not support these commands.
`.DISTRIBUTION`, which defines a user distribution for tolerances, is not supported.	**Xyce** does not support this command. This command goes along with `.MC` and `.WCASE` statistical analyses, which are also not supported.
`.LOADBIAS` and `.SAVEBIAS` initial condition commands are not supported.	**Xyce** does not support these commands.
`.ALIASES`, `.ENDALIASES`, are not supported.	**Xyce** does not support these commands.
`.STIMULUS` is not supported.	**Xyce** does not support this command.
`.TEXT` is not supported.	**Xyce** does not support this command.
`.PROBE` does not work	**Xyce** does not support this. Use the `FORMAT=PROBE` option of .PRINT instead. See section 2.1.23 for syntax.
`.OP` only produces output in serial	.OP is supported in **Xyce**, but will not produce the extra output normally associated with the .OP statement, if running a parallel build.
Pulsed source rise time of zero	A requested pulsed source rise/fall time of zero really is zero in **Xyce**. In other simulators, requesting a zero rise/fall time causes them to use the printing interval found on the tran line.
Mutual Inductor Model	Not the same as PSpice. This is a Sandia developed model.
`.PRINT` line shorthand	Output variables have to be specified as a V(node) or I(source). Listing the node alone will not work.
BSIM3 level	In **Xyce** the BSIM3 level=9. In PSpice the BSIM3 is level=7.
Interactive mode	**Xyce** does not have an interactive mode.
Time integrator default tolerances	**Xyce** has much tighter default solver tolerances than some other simulators (e.g., PSpice), and thus often takes smaller time steps. As a result, it will often take a greater number of total time steps for a given time interval. To have **Xyce** take time steps comparable to those of PSpice, set the `RELTOL` and `ABSTOL` time integrator options to larger values (e.g., `RELTOL=1.0E-2`, `ABSTOL=1.0E-6`).

`.OPTIONS` statements	**Xyce** does not support PSpice style `.OPTION` statements. In **Xyce**, the various packages all (potentially) have their own separate `.OPTIONS` line in the netlist. For a complete description, see section 2.1.18.
`DTMAX`	**Xyce** does support a maximum time step-size control on the .tran line, but we discourage its use. The time integration algorithms within **Xyce** use adaptive time-stepping methods that adjust the time-step size according to the activity in the analysis. If the simulator is not providing enough accuracy, the `RELTOL` and `ABSTOL` parameters should be decreased for both the time integration package (`.OPTIONS TIMEINT`) and the transient nonlinear solver package (`.OPTIONS NONLIN-TRAN`). We have found that in most cases specifying the same maximum timestep that PSpice requires for convergence actually slows **Xyce** down by preventing it from taking larger timesteps when the behavior warrants.
`.TRAN` "`UIC`" keyword	PSpice requires the use of a keyword `UIC` on the `.TRAN` line in order to use initial conditions via `IC` keywords on instance lines. Doing so also tells PSpice not to perform an operating point calculation. In **Xyce**, `UIC` is ignored and produces a warning message. **Xyce** always uses initial conditions specified with `IC` keywords, and the case of inductors and capacitors automatically inserts a fictitious voltage source around the device that guarantees the correct potential drop across the device during the operating point. If the user desires that **Xyce** not perform an operating point calculation, but rather use an initial condition for a transient run of all zero voltages, then the user should specify `NOOP` instead.
Temperature specification	Device temperatures in **Xyce** are specified through the `.OPTIONS DEVICE` line. PSpice allows a `.TEMP` line that is not recognized (and is ignored) by **Xyce**.
Lead currents for lossless transmission lines	PSpice uses `A` and `B` to reference the two terminals of the lossless tranmission line. So, **Xyce** uses `I1()` and `I2()`, while PSpice uses `IA()` and `IB()` to access the lead currents for the device.

6.1.13 Translating Between PSpice and **Xyce** Netlists

Some internal Sandia users have found the following checklist to be helpful in getting their PSpice netlists to run in **Xyce**. Additional changes may be needed in some cases.

For the .cir file:

- Change .LIB references to point to the modified libraries generated for use with **Xyce**.
- Change `PROBE` and `PROBE64` statements to `PRINT <Sim Type>`
- Find cases where the PSpice netlist used `N()` rather than `V()`.
- `.PARAM` statements need to be replaced with `.GLOBAL_PARAM` statements in **Xyce**.

- `.DC` has the keyword `PARAM` in PSpice. If it exists then remove it in the **Xyce** netlist.
- `.OPTIONS TNOM=X` is changed to `.OPTIONS DEVICE TNOM=X` in the **Xyce** netlist.
- `.TEMP args` does not exist in **Xyce**. The equivalent **Xyce** statement is `.STEP TEMP LIST args`
- The default time integrator tolerances can make **Xyce** take smaller timesteps on some circuits, and therefore have slower simulation times. The **Xyce** timesteps can be increased at the expense of time integration accuracy by loosening the integrator tolerances. Some users find that `.OPTIONS TIMEINT RELTOL=1e-2 ABSTOL=1e-4` leads to time steps more like PSpice's.
- Move any `.IC` and `.NODESET` statements to the top-level, and use the fully qualified node names in those statements.
- Adjust the syntax for any PWL sources, if needed, per Section 6.1.11.

For the .lib file:

- Add `LEVEL=2` parameter to diode models.
- Fix the parentheses and comma differences between PSpice and **Xyce** `.MODEL` statements per Section 6.1.9.
- Find and modify any nested expression statements. This may entail replacing "{" with "(" in the expression in the **Xyce** netlist.
- Fix the table syntax for dependent sources, as discussed in Section 6.1.8.

6.2 Differences Between **Xyce** and Other SPICE Simulators

This section covers some known differences between **Xyce** and other SPICE-like circuit simulators, besides PSpice, as listed in Table 6.2. However, users of those other simulators (e.g., SPICE3F5, HSPICE, ngspice, ...) should also check the previous subsection on PSpice, since some of that discussion also applies here.

Table 6.2: Incompatibilities with Other Circuit Simulators.

Issue	Comment
`.DC` sweep output.	The `.DC` sweep calculation does not automatically output the sweep variable. Only variables explicitly listed on the `.PRINT` line are output.
MOSFET levels.	In **Xyce** the MOSFET levels are not the same. In **Xyce**, a BSIM3 is MOSEFET level 9. Other simulators have different levels for the BSIM3.

BSIM SOI v3.2 level.	In **Xyce** the BSIM SOI (v3.2) is MOSFET level 10. Other simulators have different levels for the BSIM SOI.
BSIM4 level.	In **Xyce** the BSIM4 is MOSFET levels 14 and 54. Other simulators have different levels for the BSIM4.
Syntax for `.STEP` is different.	The manner of specifying a model parameter to be swept is slightly different than in some other simulators. See the **Xyce** Users' and Reference Guides for details.
Switch is not the same as SPICE3F5.	The **Xyce** switches are not compatible with the simple switch implementation in SPICE3F5. The switch in **Xyce** smoothly transitions between the ON and OFF resistances over a small range between the ON and OFF values of the control signal (voltage, current, or control expression). See the **Xyce** Reference Guide for the precise equations that are used to compute the switch resistance from the control signal values. The SPICE3F5 switch has a single switching threshold voltage or current, and RON is used above threshold while ROFF is used below threshold. **Xyce**'s switch is considerably less likely to cause transient simulation failures. Results similar to SPICE3F5 can be obtained by setting VON and VOFF to the same threshold value, but this is not a recommended practice.
Piecewise Linear (PWL) source not fully compatible with either HSpice or PSpice.	See Sections 2.3.9 and 6.1.11 of the **Xyce** Reference Guide for more details.
Acceptable prefixes in the metric system.	The "atto" prefix, which is designated by "a", is acceptable in HSpice, but is not accepted in **Xyce**. The use of the "atto" prefix in **Xyce** must be replaced with "E-18".
Hierarchical parameters.	In **Xyce** hierarchical parameters, `M` (multiply) and `S` (scale), are not commonly supported. The `M` parameter is only supported by the MOSFET models.
`.MEASURE` has some incompatibilities and differences with HSpice.	See Section 2.1.13 of the **Xyce** Reference Guide for more details.
The `P()` accessor for power may give different results for semiconductor devices (D, J, M, Q and Z devices) and the lossless transmission device (T device) than with HSpice.	See Sections 2.3.8, 2.3.17, 2.3.19, 2.3.16 2.3.23 and 2.3.18 for more details.
The **Xyce** `.OP` statement provides less output than other simulators.	See Section 2.1.17 for more details.
Initial conditions for lossless and lossy transmission lines	In SPICE3F5 and PSpice, initial conditions can be set on the initial voltages and currents at each end of the lossless transmission line, but not for the lossy transmission line. In **Xyce**, initial conditions can be set on the initial voltages and currents at each end of the lossy transmission line, but not for the lossless transmission line

Use of vgs(Mxxx) style syntax on the .PRINT line	Some SPICE-style circuit simulators can use the `.PRINT` line to (for example) print out the vds, vgb, vsd, etc. values for a PMOS transistor (say, `M1`) using `.PRINT TRAN vgs(M1) vbs(M1) vds(M1)`. This is not directly supported in **Xyce**. See Section 2.3.16 for how this is supported with the `N()` syntax for the BSIM3 and BSIM4 models. For other transistor devices, use something like this on the **Xyce** `.PRINT` line, `V(ng,ns)` where ng and ns are the names of the circuits nodes attached to the gate and source terminals of the transistor.

6.3 DC Operating Point Calculation Failures in **Xyce**

This section discusses various netlist problems that can cause **Xyce** to fail to get a DC Operating Point (DCOP). Some of this discussion is "tutorial" in nature, but helps illustrate the issues.

6.3.1 Incompatible Voltage Constraints at Circuit Nodes

The **Xyce** DCOP calculation will fail if the netlist specifies incompatible voltage constraints at a given node in the circuit. This netlist fragment will cause **Xyce** to fail to get a DCOP because the two voltage sources obviously cannot both apply their assigned voltage at `Node1`.

```
VA Node1 0 1
VB Node1 0 2
```

This configuration is also not allowed because there is an infinite number of ways that the two voltage sources can supply current to the rest of the circuit and still maintain the requested voltage.

```
VA Node1 0 1
VB Node1 0 1
```

With those two netlist fragments as background, the next two examples illustrate a "**Xyce**-unique" way that DCOP failure can occur. This happens because initial conditions on capacitors in **Xyce** are enforced with additional voltage sources during the DCOP. So, these two netlist fragments are identical to the two cases given above, and will both cause a DCOP failure in **Xyce**. A similar problem can occur with other **Xyce** devices that allow initial conditions, for voltage drops across the device, to be set.

```
VA node1 0 1
CB node1 0 1.0pf IC=2
```

or

```
VA node1 0 1
CB node1 0 1.0pf IC=1
```

6.3.2 Multiple Voltage Constraints From Subcircuits or at Global Nodes

Similar incompatible voltage constraints can be caused by subcircuit definitions, if the subcircuits enforce voltage constraints on one (or more) of their interface nodes. An example netlist fragment is given below. In this example, subcircuits `X1` and `X2` are trying to enforce incompatible constraints at `Node1` in the top-level circuit. This is notionally identical to the first example in the previous subsection. However, these incompatibilities can be harder to find if the subcircuit definitions are located in different library files.

```
X1 node1 0 MySubcircuitA
X2 node1 0 MySubcircuitB
.SUBCKT MYSUBCIRCUITA 1 2
VA 1 0 1
R1A 1 internalNodeA 0.5
R2A internalNodeA 2 0.5
.ENDS
.SUBCKT MYSUBCIRCUITB 3 4
VB 3 0 2
R1B 3 internalNodeB 0.5
R2B internalNodeB 4 0.5
.ENDS
```

Global nodes that have voltage sources applied to them from separate parts of the circuit (e.g, from within subcircuit definitions) can cause yet another version of the DCOP failure modes given in the previous subsection. If these two netlist statements are given in different subcircuit definitions then a **Xyce** DCOP failure will occur.

```
Vpin1 $G_GlobalNode1 0 1
Vpin2 $G_GlobalNode1 0 2
```

Of course, the examples given above can occur in varied combinations.

6.3.3 NODESET and IC Statements in Subcircuits

As previously noted, **Xyce** does not support `.NODESET` and `.IC` statements in subcircuits. This is a common cause of DCOP failure in **Xyce** when the same netlist converges in PSpice. See sections 2.1.15 and 2.1.10 for more details on how to move those `.NODESET` and `.IC` statements to the "top-level" in the **Xyce** netlist.

6.3.4 No DC Path to Ground for a Current Flow

A **Xyce** DCOP failure can occur if there is no DC path to ground at a node but a current flow must occur. This can happen because of a typographic error during netlist entry. An simple example is as follows, where the netlist line for R1 has 0 (“oh”) rather then 0 (“zero”). It can also happen when all of the current into a subcircuit must flow through capacitors.

```
I1 1 0 1
R1 1 O 1
C1 1 0 2pF
```

6.3.5 Inductor Loops

An inductor loop with no DC path to ground will also typically cause a DCOP failure. A simple example is:

```
V1 1 0 1
R1 1 2 1
L1 2 3 2uH
L2 2 3 2uH
R3 3 0 1
```

6.3.6 Infinite Slope Transistions

It is possible for a user to specify expressions that could have infinite-slope transitions with B-, E-, F-, G- and H-sources. A common example is IF statements within those source definitions. This can often lead to “timestep too small” errors when Xyce reaches the transition point. In some cases, it can also cause DCOP failures. See Section 2.3.15 and the “Analog Behavioral Modeling” (ABM) chapter of the Xyce Users’ Guide for guidance on using the B-source device and ABM expressions. Those recommendations also apply to the E-, F-, G- and H-sources.

6.3.7 Simulation Settings

Automatic source stepping was added to **Xyce** in version 6.3. **Xyce** also automatically does Gmin stepping when the DCOP calculation fails to converge. In addition, the time integration options normally do not affect the DCOP calculation. So, adjusting the simulation settings for **Xyce** typically has no effect on the DCOP calculation. However, if both of the automatic homotopy methods mentioned above do not work, and none of the other netlist issues mentioned above exist, then Xyce does have other homotopy methods available. See the **Xyce** Users Guide [45] for more details.

7. Quick Reference for Microsoft Windows Users

Xyce is supported on Microsoft Windows. However, the primary targets for **Xyce** are high-performance supercomputers and workstations, which are almost always running a variant of Unix. All of **Xyce** developement is done on Unix platforms. Bearing this in mind, there are occasionally issues with using a Unix application on a Windows platform. Some of these issues are described in the table below.

Table 7.1: Issues for Microsoft Windows.

Issue	Comment
File names are case-sensitive	**Xyce** will expect library files, which are referenced in the netlist, to have exactly the same case as the actual filename. If not, **Xyce** will be unable to find the library file.
Windows endline characters are different from other OS's	The characters that mark the end of a line in Windows are a carriage return followed by a Line Feed (`CR+LF`). In Unix-like systems (including Linux and OS X), the character is simply a Line Feed (`LF`). Moving a file between the two systems does not usually cause issues, but users should be aware of the difference in case problems arise.
Xyce is unable to read proprietary file formats.	Programs such as Microsoft Word by default use file formats that **Xyce** cannot recognize. It is best not to use such programs to create netlists, unless netlists are saved as *.txt files. If you must use a Microsoft editor, it is better to use Microsoft Notepad. In general, the best solution is to use a Unix-style editor, such as Vi, Gvim, or Emacs.

8. Rawfile Format

The rawfile format produced by **Xyce** closely follows SPICE3 conventions. Differences are noted in section 8.3. Details on the both the ASCII and binary formats are provided here for reference.

8.1 ASCII Format

The ASCII file format can be created using the `-a` flag on the command line. See Chapter 3 for more information.

The ASCII format standard dictates that the file consist of lines or sets of lines introduced by a keyword. The `Title` and `Date` lines should be the first in the file, and should occur only once. They are followed by the `Plotname`, `Flags`, `No. Variables`, and `No. Points` lines for each plot.

Listed next are sets of `Variables`, and `Values` lines. Let *numvars* be the number of variables (as specified in the `No. Variables` line), and *numpts* be the number of points (as shown on the `No. Points` line). After the `Variables` keyword there must be *numvars* declarations of outputs, and after the `Values` keyword, there must be *numpts* lines, each consisting of *numvars* values.

Finally, **Xyce** also allows for a `Version` line to be placed after the `No. Points` line for compatability with various software programs.

See Table 8.1 for a summary of the above.

Table 8.1: **Xyce** ASCII rawfile format.

Issue	Comment
`Title:`	An arbitrary string describing the circuit.
`Date:`	A free-format date string.
`Plotname:`	A string describing the analysis type.
`Flags:`	A string describing the data type (*real* or *complex*).
`No. Variables:`	The number of variables.
`No. Points:`	The number of points.
`Version:` (optional)	The version of **Xyce** used to generate this output. By default the version is not output in the header. It can be output with the `.options output outputversioninrawfile=true` option.
`Variables:`	A newline followed by multiple lines, one for each variable, of the form `[tab] <index> [tab] <name> [tab] <type>`.

`Values:`	A newline followed by multiple lines, for each point and variable, of the form `[tab] <value>` with an integer index preceeding each set of points. Complex values are output as `[tab] <real component>, <imaginary component>` .

8.2 Binary Format

The binary format is similar to the ASCII format, except that strings are null terminated rather than newline terminated. In addition, all the `values` lines are stored in a binary format. The binary storage of real values as double precision floats is architecture specific.

See Table 8.2 for a summary of the binary table format.

Table 8.2: **Xyce** binary rawfile format.

Issue	Comment
`Title:`	An arbitrary string describing the circuit.
`Date:`	A free-format date string.
`Plotname:`	A string describing the analysis type.
`Flags:`	A string describing the data type (*real* or *complex*).
`No. Variables:`	The number of variables.
`No. Points:`	The number of points.
`Version:` (optional)	The version of **Xyce** used to generate this output. By default the version is not output in the header. It can be output with the `.options output outputversioninrawfile=true` option.
`Variables:`	A newline followed by multiple lines, one for each variable, of the form `[tab] <index> [tab] <name> [tab] <type>`.
`Binary:`	Each real data point is stored contiguously in `sizeof(double)` byte blocks. Complex values are output as real and imaginary components in a block of size `2*sizeof(double)` byte blocks.

8.3 Special Notes

- Complex data points are only output under `AC` analysis.
- `Commands` and `Options` lines are not used.
- Binary header is formatted ASCII.
- **Xyce** can output an optional `Version` line in the header.

References

[1] Eric R. Keiter, Karthik V. Aadithya, Ting Mei, Thomas V. Russo, Richard L. Schiek, Peter E. Sholander, Heidi K. Thornquist, and Jason C. Verley. Xyce Parallel Electronic Simulator: Users' Guide, Version 6.8. Technical Report SAND2017-11351, Sandia National Laboratories, Albuquerque, NM, 2017.

[2] Orcad PSpice User's Guide. Technical report, Orcad, Inc., 1998.

[3] HSPICE User's Guide. Technical report, Synopsys, Mountain View, California, 2008.

[4] PSPICE A/D Reference Guide. Technical report, Cadence, San Jose, California, 2008.

[5] T. Banwell. Bipolar transistor circuit analysis using the Lamber W-function. *IEEE Transactions on Circuits and Systems*, 47(11):1621–1633, November 2000.

[6] Arthur P. Mattuck. *Introduction to Analysis*. Prentice Hall, Inc., 1999.

[7] H. K. Gummel and H. C. Poon. An integral charge control model of bipolar transistors. *Bell Sys. Techn. J.*, May-June:827–852, 1970.

[8] Colin McAndrew, Mark Dunn, Shahriar Moinian, and Michael Schröter. VBIC95, The Vertical Bipolar Inter-Company Model. *IEEE Journal of Solid-State Circuits*, 31(10):1476–1483, 1996.

[9] Matthias Rudolph. Documentation of the fbh hbt model, 2005.

[10] The SiGe group at Auburn University. Mextram web site, 2015.

[11] T. A. Fjeldly, T. Ytterdal, and M. Shur. *Introduction to Device Modeling and Circuit Simulation*. Wiley InterScience, 1998.

[12] A. S. Grove. *Physics and Technology of Semiconductor Devices*. John Wiley and Sons, Inc., 1967.

[13] P. Antognetti and G. Massobrio. *Semiconductor Device Modeling with SPICE*. McGraw-Hill, 1988.

[14] J.H. Huang, Z.H. Liu, M.C. Jeng, K. Hui, M. Chan, P.K. KO, and C. Hu. BSIM3 Manual. Technical report, Department of Electrical Engineering and Computer Science, University of California, Berkeley, CA 94720.

[15] M. Bucher, C. Lallement, C. Enz, F. Theodoloz, and F. Krummenacher. The EPFL/EKV MOSFET Model Equations for Simulation Technical Report: Model Version 2.6. Technical report, Electonics Laboratories, Swiss Federal Institute of Technology (EPFL), Lausanne, Switzerland, September 1997.

[16] H. Shichman and D. A. Hodges. Modeling and simulation of insulated-gate field-effect transistor switching circuits. *IEEE Journal of Solid-State Circuits*, SC-3:285, September 1968.

[17] A. Vladimirescu and S. Lui. The Simulation of MOS Integrated Circuits using SPICE2. Technical Report Memorandum No. M80/7, February 1980.

[18] B. J. Sheu, D. L. Scharfetter, P.-K. Ko, and M.-C. Jeng. BSIM: Berkeley Short-channel IGFET Model for MOS Transistors. *IEEE Journal of Solid-State Circuits*, SC-22:558–566, August 1987.

[19] J. R. Pierret. A MOS Parameter Extraction Program for the BSIM Model. Technical Report Memorandum No. M84/99 and M84/100, November 1984.

[20] Ping Yang, Berton Epler, and Pallab K. Chatterjee. An investigation of the charge conservation problem for MOSFET circuit simulation. *IEEE Journal of Solid-State Circuits*, SC-18(1), February 1983.

[21] BSIM3v3.1 Manual. Technical report, Department of Electrical Engineering and Computer Science, University of California, Berkeley, CA 94720.

[22] J. C. Bowers and H. A. Neinhaus. SPICE2 Computer Models for HEXFETs. Technical Report Application Note 954A, International Rectifier Corporation, Berkeley, CA 94720.

[23] P. Su, H. Wan, S. Fung, M. Chan, A. Niknejad, and C. Hu. BSIM3SOI3.1 MOSFET MODEL Users' Manual. Technical report, Department of Electrical Engineering and Computer Science, University of California, Berkeley, CA 94720.

[24] P. Su, H. Wan, S. Fung, M. Chan, A. Niknejad, and C. Hu. BSIM3SOI3.2 documentation. Technical report, Department of Electrical Engineering and Computer Science, University of California, Berkeley, CA 94720.

[25] G. Gildenblat, X. Li, W.Wu, H. Wang, A. Jha, R. van Langevelde, G.D.J. Smit, A.J. Scholten, and D.B.M. Klaassen. PSP: An advanced surface-potential-based MOSFET model for circuit simulation. *IEEE Transactions on Electron Devices*, 53(9):1979–1993, 2006.

[26] V. Sriramkumar, N. Paydavosi, J. Duarte, D. Lu, C. Lin, M. Dunga, S. Yao, T. Morshed, A. Niknejad, and C. Hu. BSIM-CMG 107.0.0 Multi-Gate MOSFET Compact Model Technical Manual. Technical report, Department of Electrical Engineering and Computer Science, University of California, Berkeley, CA 94720.

[27] M. Bucher, A. Bazigos, E. Kitonaki, and F. Krummenacher. Recent advances in the EKV3 MOS transistor model. In *NANOTECH 2006, Workshop on Compact Models*, May 2006.

[28] M. Bucher, D. Diamantakos, A. Bazigos, and F. Krummenacher. Design-oriented characterization and parameter extraction methodologies for the EKV3 MOSFET model. In *NANOTECH 2007 Workshop on Compact Modeling*, May 2007.

[29] J.S. Roychowdhury, A.R. Newton, and D.O. Pederson. Algorithms for the transient simulation of lossy interconnect. *IEEE Trans. Computer-Aided Design of Integrated Circuits and Systems*, 13(1), 1994.

[30] Tom Quarles. Spice3f5 Users' Guide. Technical report, University of California-Berkeley, Berkeley, California, 1994.

[31] Abnita Munankarmay and Michael A. Heroux. A comparison of two equivalent real formulations for complex-valued linear systems part 1: Introduction and method. *American Journal of Undergraduate Research*, 1(3), 2002.

[32] Federico Milano. *Power System Modelling and Scripting*. Springer, 2010.

[33] Prabha Kundur. *Power System Stability and Control*. McGraw Hill, 1994.

[34] Shahar Kvatinsky, Keren Talisveyberg, Dmitry Fliterand, Avinoam Kolodny, Uri C. Weiser, and Eby G. Friedman. Models of memristors for spice simulations. *IEEE 27th Convention of Electrical and Electronics Engineers in Israel*, pages 1–5, 2012.

[35] Shahar Kvatinsky, Eby G. Friedman, Avinoam Kolodny, and Uri C. Weiser. Team: Threshold adaptive memristor model. *IEEE Transactions On Circuits And SystemsI*, 60:211–221, January 2013.

[36] Shahar Kvatinsky, Eby G. Friedman, Avinoam Kolodny, and Uri C. Weiser. Generalized memristive device spice model and its application in circuit design. *IEEE Transactions on Computer-Aided Design of Integrated Circuits and Systems*, 32, August 2013.

[37] Niroula J., Agarwal S., Jacobs-Gedrim R., Schiek R., Hughart D., Hsia A., James C., and Marinella M. Compact model of resistive memory for pulsed analog and neuromorphic applications. *Subbmitted to Journal of Computational Electronics*, 2017.

[38] C. D. Thurmond. The standard thermodynamic function of the formation of electrons and holes in Ge, Si, GaAs, and GaP. *J. Electrochem. Soc.*, 122:1133, 1975.

[39] D.M. Caughey and R.E. Thomas. Carrier mobilities in silicon empirically related to doping and field. *Proc. IEEE*, 55:2192–2193, 1967.

[40] N.D. Arora, J.R. Hauser, and D.J. Roulston. Electron and hole mobilities in silicon as a function of concentration and temperature. *IEEE Transactions on Electron Devices*, ED-29:292–295, 1982.

[41] J.M. Dorkel and Ph. Leturq. Carrier mobilities in silicon semi-empirically related to temperature, doping, and injection level. *Solid-State Electronics*, 24(9):821–825, 1981.

[42] C. Lombardi, S. Manzini, A. Saporito, and M. Vanzi. A physically based mobility model for numerical simulation of nonplanar devices. *IEEE Transactions on Computer-Aided Design*, 7(11):1164–1170, November 1988.

[43] Ben G. Streetman and Sanjay Banerjee. *Solid State Electronic Devices*. Prentice-Hall, Upper Saddle River, New Jersey, 2000.

[44] K.E. Brenan, S.L Campbell, and L.R. Petzold. *Numerical Solution of Initial-Value Problems in Differential-Algebraic Equations*. Society for Industrial and Applied Mathmatics, Philadelphia, 1996.

[45] Eric R. Keiter, Karthik V. Aadithya, Ting Mei, Thomas V. Russo, Richard L. Schiek, Peter E. Sholander, Heidi K. Thornquist, and Jason C. Verley. Xyce Parallel Electronic Simulator: Users' Guide, Version 6.5. Technical Report SAND2016-5197, Sandia National Laboratories, Albuquerque, NM, 2016.

A. Third Party Licenses

Xyce makes use of code developed by various third parties. The following text is provided to comply with the licenses of the codes that require it.

Xyce's expression library is based on that inside Spice 3f5 developed by the EECS Department at the University of California, which has the following license:

```
7/17/2007
Spice is covered now covered by the BSD Copyright:

Copyright (c) 1985-1991 The Regents of the University of California.
All rights reserved.

Permission is hereby granted, without written agreement and without license
or royalty fees, to use, copy, modify, and distribute this software and its
documentation for any purpose, provided that the above copyright notice and
the following two paragraphs appear in all copies of this software.

IN NO EVENT SHALL THE UNIVERSITY OF CALIFORNIA BE LIABLE TO ANY PARTY FOR
DIRECT, INDIRECT, SPECIAL, INCIDENTAL, OR CONSEQUENTIAL DAMAGES ARISING OUT
OF THE USE OF THIS SOFTWARE AND ITS DOCUMENTATION, EVEN IF THE UNIVERSITY OF
CALIFORNIA HAS BEEN ADVISED OF THE POSSIBILITY OF SUCH DAMAGE.

THE UNIVERSITY OF CALIFORNIA SPECIFICALLY DISCLAIMS ANY WARRANTIES,
INCLUDING, BUT NOT LIMITED TO, THE IMPLIED WARRANTIES OF MERCHANTABILITY AND
FITNESS FOR A PARTICULAR PURPOSE. THE SOFTWARE PROVIDED HEREUNDER IS ON AN
"AS IS" BASIS, AND THE UNIVERSITY OF CALIFORNIA HAS NO OBLIGATION TO PROVIDE
MAINTENANCE, SUPPORT, UPDATES, ENHANCEMENTS, OR MODIFICATIONS.
```

Xyce's linear solver makes use of the AMD library:

```
AMD, Copyright (c), 1996-2015, Timothy A. Davis,
Patrick R. Amestoy, and Iain S. Duff.  All Rights Reserved.
Used in Xyce under the LGPL v2.1 license.
```

Parallel builds of **Xyce** use the Open MPI library:

Most files in this release are marked with the copyrights of the organizations who have edited them. The copyrights below are in no particular order and generally reflect members of the Open MPI core team who have contributed code to this release. The copyrights for code used under license from other parties are included in the corresponding files.

Copyright (c) 2004-2010 The Trustees of Indiana University and Indiana University Research and Technology Corporation. All rights reserved.
Copyright (c) 2004-2010 The University of Tennessee and The University of Tennessee Research Foundation. All rights reserved.
Copyright (c) 2004-2010 High Performance Computing Center Stuttgart, University of Stuttgart. All rights reserved.
Copyright (c) 2004-2008 The Regents of the University of California. All rights reserved.
Copyright (c) 2006-2010 Los Alamos National Security, LLC. All rights reserved.
Copyright (c) 2006-2010 Cisco Systems, Inc. All rights reserved.
Copyright (c) 2006-2010 Voltaire, Inc. All rights reserved.
Copyright (c) 2006-2011 Sandia National Laboratories. All rights reserved.
Copyright (c) 2006-2010 Sun Microsystems, Inc. All rights reserved. Use is subject to license terms.
Copyright (c) 2006-2010 The University of Houston. All rights reserved.
Copyright (c) 2006-2009 Myricom, Inc. All rights reserved.
Copyright (c) 2007-2008 UT-Battelle, LLC. All rights reserved.
Copyright (c) 2007-2010 IBM Corporation. All rights reserved.
Copyright (c) 1998-2005 Forschungszentrum Juelich, Juelich Supercomputing Centre, Federal Republic of Germany
Copyright (c) 2005-2008 ZIH, TU Dresden, Federal Republic of Germany
Copyright (c) 2007 Evergrid, Inc. All rights reserved.
Copyright (c) 2008 Chelsio, Inc. All rights reserved.
Copyright (c) 2008-2009 Institut National de Recherche en Informatique. All rights reserved.
Copyright (c) 2007 Lawrence Livermore National Security, LLC. All rights reserved.
Copyright (c) 2007-2009 Mellanox Technologies. All rights reserved.
Copyright (c) 2006-2010 QLogic Corporation. All rights reserved.
Copyright (c) 2008-2010 Oak Ridge National Labs. All rights reserved.
Copyright (c) 2006-2010 Oracle and/or its affiliates. All rights reserved.
Copyright (c) 2009 Bull SAS. All rights reserved.
Copyright (c) 2010 ARM ltd. All rights reserved.
Copyright (c) 2010-2011 Alex Brick <bricka@ccs.neu.edu>. All rights reserved.
Copyright (c) 2013-2014 Intel, Inc. All rights reserved.
Copyright (c) 2011-2014 NVIDIA Corporation. All rights reserved.

Additional copyrights may follow

```
Redistribution and use in source and binary forms, with or without
modification, are permitted provided that the following conditions are
met:

- Redistributions of source code must retain the above copyright
  notice, this list of conditions and the following disclaimer.

- Redistributions in binary form must reproduce the above copyright
  notice, this list of conditions and the following disclaimer listed
  in this license in the documentation and/or other materials
  provided with the distribution.

- Neither the name of the copyright holders nor the names of its
  contributors may be used to endorse or promote products derived from
  this software without specific prior written permission.

The copyright holders provide no reassurances that the source code
provided does not infringe any patent, copyright, or any other
intellectual property rights of third parties.  The copyright holders
disclaim any liability to any recipient for claims brought against
recipient by any third party for infringement of that parties
intellectual property rights.

THIS SOFTWARE IS PROVIDED BY THE COPYRIGHT HOLDERS AND CONTRIBUTORS
"AS IS" AND ANY EXPRESS OR IMPLIED WARRANTIES, INCLUDING, BUT NOT
LIMITED TO, THE IMPLIED WARRANTIES OF MERCHANTABILITY AND FITNESS FOR
A PARTICULAR PURPOSE ARE DISCLAIMED. IN NO EVENT SHALL THE COPYRIGHT
OWNER OR CONTRIBUTORS BE LIABLE FOR ANY DIRECT, INDIRECT, INCIDENTAL,
SPECIAL, EXEMPLARY, OR CONSEQUENTIAL DAMAGES (INCLUDING, BUT NOT
LIMITED TO, PROCUREMENT OF SUBSTITUTE GOODS OR SERVICES; LOSS OF USE,
DATA, OR PROFITS; OR BUSINESS INTERRUPTION) HOWEVER CAUSED AND ON ANY
THEORY OF LIABILITY, WHETHER IN CONTRACT, STRICT LIABILITY, OR TORT
(INCLUDING NEGLIGENCE OR OTHERWISE) ARISING IN ANY WAY OUT OF THE USE
OF THIS SOFTWARE, EVEN IF ADVISED OF THE POSSIBILITY OF SUCH DAMAGE.
```

Xyce uses the Trilinos Solver Framework:

```
# ************************************************************************
#
#            Trilinos: An Object-Oriented Solver Framework
#                 Copyright (2001) Sandia Corporation
#
#
# Copyright (2001) Sandia Corporation. Under the terms of Contract
# DE-AC04-94AL85000, there is a non-exclusive license for use of this
# work by or on behalf of the U.S. Government.  Export of this program
```

```
# may require a license from the United States Government.
#
# 1. Redistributions of source code must retain the above copyright
# notice, this list of conditions and the following disclaimer.
#
# 2. Redistributions in binary form must reproduce the above copyright
# notice, this list of conditions and the following disclaimer in the
# documentation and/or other materials provided with the distribution.
#
# 3. Neither the name of the Corporation nor the names of the
# contributors may be used to endorse or promote products derived from
# this software without specific prior written permission.
#
# THIS SOFTWARE IS PROVIDED BY SANDIA CORPORATION "AS IS" AND ANY
# EXPRESS OR IMPLIED WARRANTIES, INCLUDING, BUT NOT LIMITED TO, THE
# IMPLIED WARRANTIES OF MERCHANTABILITY AND FITNESS FOR A PARTICULAR
# PURPOSE ARE DISCLAIMED. IN NO EVENT SHALL SANDIA CORPORATION OR THE
# CONTRIBUTORS BE LIABLE FOR ANY DIRECT, INDIRECT, INCIDENTAL, SPECIAL,
# EXEMPLARY, OR CONSEQUENTIAL DAMAGES (INCLUDING, BUT NOT LIMITED TO,
# PROCUREMENT OF SUBSTITUTE GOODS OR SERVICES; LOSS OF USE, DATA, OR
# PROFITS; OR BUSINESS INTERRUPTION) HOWEVER CAUSED AND ON ANY THEORY OF
# LIABILITY, WHETHER IN CONTRACT, STRICT LIABILITY, OR TORT (INCLUDING
# NEGLIGENCE OR OTHERWISE) ARISING IN ANY WAY OUT OF THE USE OF THIS
# SOFTWARE, EVEN IF ADVISED OF THE POSSIBILITY OF SUCH DAMAGE.
#
# NOTICE:  The United States Government is granted for itself and others
# acting on its behalf a paid-up, nonexclusive, irrevocable worldwide
# license in this data to reproduce, prepare derivative works, and
# perform publicly and display publicly.  Beginning five (5) years from
# July 25, 2001, the United States Government is granted for itself and
# others acting on its behalf a paid-up, nonexclusive, irrevocable
# worldwide license in this data to reproduce, prepare derivative works,
# distribute copies to the public, perform publicly and display
# publicly, and to permit others to do so.
#
# NEITHER THE UNITED STATES GOVERNMENT, NOR THE UNITED STATES DEPARTMENT
# OF ENERGY, NOR SANDIA CORPORATION, NOR ANY OF THEIR EMPLOYEES, MAKES
# ANY WARRANTY, EXPRESS OR IMPLIED, OR ASSUMES ANY LEGAL LIABILITY OR
# RESPONSIBILITY FOR THE ACCURACY, COMPLETENESS, OR USEFULNESS OF ANY
# INFORMATION, APPARATUS, PRODUCT, OR PROCESS DISCLOSED, OR REPRESENTS
# THAT ITS USE WOULD NOT INFRINGE PRIVATELY OWNED RIGHTS.
#
# ***********************************************************************
```

Xyce's implementation of the MEXTRAM model, version 504.12.1, is derived from Verilog-A sources provided under the following license:

Copyright (c) 2000-2007, NXP Semiconductors
Copyright (c) 2007-2014, Delft University of Technology
Copyright (c) 2015, Auburn University

INTELLECTUAL PROPERTY NOTICE, DISCLAIMER AND LICENSE

The Mextram model and documentation presented at this website, denoted as the Model, has been developed by NXP Semiconductors until 2007, Delft University of Technology from 2007 to 2014, and Auburn University since April 2015.

The Model is distributed as is, completely without any expressed or implied warranty or service support. NXP Semiconductors, Delft University of Technology, Auburn University and their employees are not liable for the condition or performance of the Model.

NXP Semiconductors, Delft University of Technology, Auburn University own the copyright and grant users a perpetual, irrevocable, worldwide, non-exclusive, royalty-free license with respect to the Model as set forth below.

NXP Semiconductors, Delft University of Technology, Auburn University hereby disclaim all implied warranties.

NXP Semiconductors, Delft University of Technology, Auburn University grant the users the right to modify, copy, and redistribute the Model and documentation, both within the user's organization and externally, subject to the following restrictions

1. The users agree not to charge for the code itself but may charge for additions, extensions, or support.

2. In any product based on the Model, the users agree to acknowledge NXP Semiconductors, Delft University of Technology, Auburn University that developed the Model. This acknowledgment shall appear in the product documentation.

3. The users agree to obey all restrictions governing redistribution or export of the Model.

4. The users agree to reproduce any copyright notice which appears on the Model on any copy or modification of such made available to others.

Xyce's implementation of the HICUM/L0 model, version 1.32, is derived from Verilog-A sources provided under the following license:

Software is distributed as is, completely without warranty or service

```
support. Michael Schroter and his team members are not liable for the
condition or performance of the software.

Michael Schroter owns the copyright and grants users a perpetual,
irrevocable, worldwide, non-exclusive, royalty-free license with respect
to the software as set forth below.

Michael Schroter hereby disclaims all implied warranties.

Michael Schroter grants the users the right to modify, copy, and
redistribute the software and documentation, both within the user's
organization and externally, subject to the following restrictions.

1. The users agree not to charge for the model owner's code itself but may
   charge for additions, extensions, or support.

2. In any product based on the software, the users agree to acknowledge
   Michael Schroter who developed the model and software. This
   acknowledgment shall appear in the product documentation.

3. Redistributions to others of source code and documentation must retain
   the copyright notice, disclaimer, and list of conditions.

4. Redistributions to others in binary form must reproduce the copyright
   notice, disclaimer, and list of conditions in the documentation
   and/or other materials provided with the distribution
```

Xyce's implementation of the HICUM/L2 model, version 2.34, is derived from Verilog-A sources provided under the following license:

```
The Software is distributed as is, completely without expressed
or implied warranty or service support. Michael Schroter and his team
members are not liable for the condition or performance of the software.

Michael Schroter owns the copyright and grants users a perpetual,
irrevocable, worldwide, non-exclusive, royalty-free license with respect
to the software as set forth below.

Michael Schroter hereby disclaims all implied warranties.

Michael Schroter grants the users the right to modify, copy, and
redistribute the software and documentation, both within the user's
organization and externally, subject to the following restrictions.

1. The users agree not to charge for the model owner code itself but may
charge for additions, extensions, or support.
```

```
2. In any product based on the software, the users agree to acknowledge
Michael Schroter that developed the model and software. This
acknowledgment shall appear in the product documentation.

3. Users agree to obey all government restrictions governing
redistribution or export of the software.

4. The Users agree to reproduce any copyright notice which appears on
the software and documentation on any copy or modification of such
made available to others.
```

Xyce's implementation of the BSIM3 v.3.2.2, the BSIM4 v. 4.6.1, and the BSIM-SOI v. 3.2, are based on the original code of those devices provided by University of California, Berkeley. They all have the following license:

```
Software is distributed as is, completely without warranty or service
support. The University of California and its employees are not liable
for the condition or performance of the software.

The University owns the copyright but shall not be liable for any
infringement of copyright or other proprietary rights brought by third
parties against the users of the software.

The University of California hereby disclaims all implied warranties.

The University of California grants the users the right to modify, copy,
and redistribute the software and documentation, both within the user's
organization and externally, subject to the following restrictions

1. The users agree not to charge for the University of California code
   itself but may charge for additions, extensions, or support.

2. In any product based on the software, the users agree to acknowledge
   the UC Berkeley BSIM Research Group that developed the software. This
   acknowledgment shall appear in the product documentation.

3. The users agree to obey all U.S. Government restrictions governing
   redistribution or export of the software.

4. The users agree to reproduce any copyright notice which appears on
   the software on any copy or modification of such made available
   to others.
```

Xyce's implementation of the BSIM6 model, version 6.1.1, is derived from Verilog-A sources provided under the following license:

```
Software is distributed as is, completely without warranty or service
support. The University of California and its employees are not liable
for the condition or performance of the software.

The University owns the copyright but shall not be liable for any
infringement of copyright or other proprietary rights brought by third
parties against the users of the software.

The University of California hereby disclaims all implied warranties.

The University of California grants the users the right to modify, copy,
and redistribute the software and documentation, both within the user's
organization and externally, subject to the following restrictions

1. The users agree not to charge for the University of California code
   itself but may charge for additions, extensions, or support.

2. In any product based on the software, the users agree to acknowledge
   the UC Berkeley BSIM Research Group that developed the software. This
   acknowledgment shall appear in the product documentation.

3. The users agree to obey all U.S. Government restrictions governing
   redistribution or export of the software.

4. The users agree to reproduce any copyright notice which appears on
   the software on any copy or modification of such made available
   to others.
```

Xyce's implementations of the BSIM-CMG model, versions 107.0.0 and 110.0.0, are derived from Verilog-A sources provided under the following license:

```
Software is distributed as is, completely without warranty or service
support. The University of California and its employees are not liable
for the condition or performance of the software.

The University owns the copyright but shall not be liable for any
infringement of copyright or other proprietary rights brought by third
parties against the users of the software.

The University of California hereby disclaims all implied warranties.

The University of California grants the users the right to modify, copy,
and redistribute the software and documentation, both within the user's
organization and externally, subject to the following restrictions

1. The users agree not to charge for the University of California code
   itself but may charge for additions, extensions, or support.
```

```
2. In any product based on the software, the users agree to acknowledge
   the UC Berkeley BSIM Research Group that developed the software. This
   acknowledgment shall appear in the product documentation.

3. The users agree to obey all U.S. Government restrictions governing
   redistribution or export of the software.

4. The users agree to reproduce any copyright notice which appears on
   the software on any copy or modification of such made available
   to others.
```

Xyce's implementation of the MVS model, version 2.0.0, is derived from Verilog-A sources provided under the following license:

```
Copyright @ 2013 Massachusetts Institute of Technology (MIT)

The terms under which the software and associated documentation (the Software)
is provided are as the following:

The Software is provided "as is", without warranty of any kind, express or
implied, including but not limited to the warranties of merchantability,
fitness for a particular purpose and noninfringement. In no event shall the
authors or copyright holders be liable for any claim, damages or other
liability, whether in an action of contract, tort or otherwise, arising from,
out of or in connection with the Software or the use or other dealings in the
Software.

MIT grants, free of charge, to any users the right to modify, copy, and
redistribute the Software, both within the user's organization and externally,
subject to the following restrictions:

1. The users agree not to charge for the MIT code itself but may charge for
additions, extensions, or support.

2. In any product based on the Software, the users agree to acknowledge the MIT
VS Model Research Group that developed the software. This acknowledgment shall
appear in the product documentation.

3. The users agree to obey all U.S. Government restrictions governing
redistribution or export of the software.

4. The users agree to reproduce any copyright notice which appears on the
software on any copy or modification of such made available to others.
```

Xyce's implementation of the PSP model, version 102.5.0, is derived from Verilog-A sources pro-

vided under the following license:

INTELLECTUAL PROPERTY NOTICE, DISCLAIMER AND LICENSE

The compact model software and documentation presented at this website form a whole that will henceforth be denoted as the "Model".

The Model presented at this website has been co-developed by NXP Semiconductors and Arizona State University until and including 2011. For this part of the Model, NXP Semiconductors claims undivided ownership and copyrights.

Since 2012 until today the Model has been co-developed by NXP Semiconductors and Delft University of Technology and for this part each claim undivided ownership and copyrights.

DISCLAIMER

The owners are fully free to further develop, adapt and extend the Model as they judge necessary or desirable.

The Model is distributed as is, completely without any express or implied warranty, or service support. The owners and their employees are not liable in any way for the condition or performance of the Model. The owners hereby disclaim all implied warranties.

LICENSE

NXP Semiconductors and Delft University of Technology hereby grant users a perpetual, irrevocable, worldwide, non-exclusive, royalty-free license with respect to Versions of the Model which have been released through this website http://psp.ewi.tudelft.nl.

NXP Semiconductors and Delft University of Technology grant the users the right to modify, copy and redistribute the Model, both within the user's organization and externally, subject to the following restrictions.

RESTRICTIONS

1. The users agree not to charge for the Model itself but may charge for additions, extensions, or support.

2. In any product based on the Model, the users agree to acknowledge the owners as developers of the Model. This acknowledgment shall appear in the product documentation.

3. The users agree to only use the name of CMC standard models to identify implementations of the CMC standard models which produce the same outputs as Standard code for the same inputs passing all CMC QA tests.

4. The users agree to obey all government restrictions governing redistribution or export of the software.

5. The users agree to reproduce any copyright notice which appears on the software and documentation on any copy or modification of such made available to others.

Xyce's implementations of the PSP model, version 103.4.0, and the JUNCAP diode, are derived from Verilog-A sources provided under the following license:

Software is distributed as is, completely without warranty or service support. The Commissariat a l'energie atomique et aux energies alternatives (CEA), NXP Semiconductors, and Delft University of Technology, along with their employees are not liable for the condition or performance of the software.

NXP Semiconductors, Delft University of Technology, and CEA own the copyright and grant users a perpetual, irrevocable, worldwide, non-exclusive, royalty-free license with respect to the software as set forth below.

NXP Semiconductors, Delft University of Technology, and CEA hereby disclaim all implied warranties.

NXP Semiconductors, Delft University of Technology, and CEA grant the users the right to modify, copy, and redistribute the software and documentation, both within the user's organization and externally, subject to the following restrictions:

1. The users agree not to charge for the NXP Semiconductors, Delft University of Technology, and CEA-developed code itself but may charge for additions, extensions, or support.

2. In any product based on the software, the users agree to acknowledge NXP Semiconductors, Delft University of Technology, and CEA that developed the software. This acknowledgment shall appear in the product documentation.

3. Redistributions to others of source code and documentation must retain the copyright notice, disclaimer, and list of conditions.

```
4. Redistributions to others in binary form must reproduce the copyright
   notice, disclaimer, and list of conditions in the documentation and/or
   other materials provided with the distribution.
```

Xyce's implementation of the EKV3 model, version 301.02, is derived from Verilog-A sources developed by the EKV Team of the Electronics Laboratory-TUC (Technical University of Crete). It is included in **Xyce** under license from Technical University of Crete. The official web site of the EKV model is `http://ekv.epfl.ch/`.

Due to licensing restrictions, the EKV3 MOSFET is not available in open-source versions of Xyce. The license for EKV3 authorizes Sandia National Laboratories to distribute EKV3 only in binary versions of the code.

Index

Xyce
- ABSTOL, 540
- RELTOL, 540
- convergence, 540

.AC, 26
.DCVOLT, 29, 36
.FUNC, 33
- subcircuit scoping, 33, 108

.GLOBAL_PARAM, 34
.HB, 35
.IC, 36
.INC, 37
.LIB, 38
.MEASURE, 40, 42
.MODEL, 122
- subcircuit scoping, 56, 108

.NODESET, 59
.NOISE, 60
.OPTIONS, 62, 543, 549
- DEVICE, 62
- HBINT, 68
- LINSOL-HB, 74
- LINSOL, 72
- LOCA, 71
- NONLIN-TRAN, 68
- NONLIN, 68
- OUTPUT, 75
- RESTART, 75
- SENSITIVITY, 78
- TIMEINT, 64

.OP, 61
.PARAM, 79
- subcircuit scoping, 79, 108

.PREPROCESS
- ADDRESISTORS, 82
- REMOVEUNUSED, 81
- REPLACEGROUND, 80

.PRINT, 26, 27, 35, 60, 84, 110
- AC, 26, 90
- DC, 27, 91
- HB, 35, 92
- NOISE, 60, 93
- TRAN, 94, 110
- AC Analysis, 90
- DC Analysis, 91
- Device Parameters and Internal Variables, 98
- Harmonic Balance Analysis, 92
- Homotopy Analysis, 95
- Noise Analysis, 93
- Parameter Stepping, 96
- Transient Analysis, 94

.RESULT, 100
.SAVE, 101
.SENS, 102
.STEP, 104
.SUBCKT, 107, 122
.TRAN, 75, 109
ABSTOL, 64, 69
BPENABLE, 67
DC, 27
EXITSTEP, 67
EXITTIME, 67
MAXSTEP, 69
NLNEARCONV, 65
NLSMALLUPDATE, 65
RELTOL, 64, 69
RESTARTSTEPSCALE, 64
1d pde (level 1)
- device instance parameters, 509

2d pde (level 2)
- device instance parameters, 513

AC analysis, 26
accelerated mass device, 487
Accelerated Mass Devices, 123

algorithm
time integration, 549
analog behavioral modeling
POLY, 118
polynomial expression, 118
analysis
AC, 26
control parameters, 62
DC, 27, 68
Decade sweeps, 27
Linear sweeps, 27
List Sweeps, 27
Octave sweeps, 27
HB, 35
Noise, 60
op, 61
options, 62
STEP
Decade sweeps, 105
Linear sweeps, 104
List sweeps, 106
Octave sweeps, 106
step, 104
transient, 68, 109, 110
Aztec, 72

behavioral digital
device instance parameters, 478, 483
device model parameters, 478, 483
bias point, 110
bipolar junction transistor
device instance parameters, 183
device model parameters, 183
BJT, 176
bsim-cmg finfet v107.0.0
device instance parameters, 426
device model parameters, 427
bsim-cmg finfet v110.0.0
device instance parameters, 390
device model parameters, 391
bsim3
device instance parameters, 247
device model parameters, 247
bsim3 soi
device instance parameters, 261
device model parameters, 262
bsim4
device instance parameters, 283
device model parameters, 284
bsim6
device instance parameters, 314
device model parameters, 315
bsource, 175

capacitor, 131
device instance parameters, 132
device model parameters, 133
checkpoint, 75
command line, 537
arguments, 537
constants (`EXP`,`PI`), 33
controlled switch, 469
device model parameters, 470
convergence, 540
current controlled current source, 172
current controlled voltage source, 174
current source
current controlled, 172
independent, 160
nonlinear dependent, 175
voltage controlled, 173

DC analysis, 27, 68
Decade sweeps, 27
Linear sweeps, 27
List sweeps, 27
Octave sweeps, 27
device
ABM device
PSpice equivalent, 543
ACC Devices, 123
accelerated mass devices, 123
analog, 122
analog device summary, 122
B source, 122
bipolar junction transistor (BJT, 123
BJT, 176
bsource, 175
capacitor, 122, 131
controlled switch, 469
current controlled current source, 122, 172
current controlled switch, 123
current controlled voltage source, 122, 174
digital devices, 123, 477
digital devices, Y type, 482
diode, 122, 150

equations, 122
generic switch, 472
independent current source, 122
independent voltage source, 123, 160, 165
inductor, 123, 135
JFET, 123, 220
lossless transmission line, 473
LTRA, 123
ltra, 467
lumped transmission line, 475
memristor, 123
MESFET, 123, 224
MOSFET, 123, 226
mutual inductor, 123
mutualinductor, 138
nodes, 128
nonlinear dependent source, 122
package options, 62
PDE Devices, 123, 509
resistor, 123, 145
subcircuit, 123
transmission line, 123
lossless, 473
lossy, 467
lumped, 475
voltage controlled current source, 122, 173
voltage controlled switch, 123
voltage controlled voltage source, 122, 170
Digital Devices, 123
digital devices, 477
diode, 150
device instance parameters, 152
device model parameters, 152
operating temperature, 150
dopingprofiles
composite parameters, 516

ekv3 mosfet
device instance parameters, 459
device model parameters, 459
expressions
operators, 112
SPICE functions, 115

fbh hbtx v2.1
device instance parameters, 200
device model parameters, 200

generic switch, 472

harmonic balance analysis, 35
hicum l0 v1.32
device instance parameters, 203
device model parameters, 203
hicum v2.34
device model parameters, 207

ideal transmission line
device instance parameters, 473
illegal characters, 129
independent voltage source, 160, 165
inductor, 135
device instance parameters, 137
device model parameters, 137
initial condition, 29, 36, 59
DCVOLT, 29, 36
IC, 36
NODESET, 59

JFET, 220
jfet
device instance parameters, 221, 222
device model parameters, 221, 222
juncap200 diode
device instance parameters, 153
device model parameters, 153

Lambert-W Function, 63
layer
composite parameters, 515
lead currents, 86, 130
legal characters, 129
level parameter, 57
lossless transmission line, 473
lossy transmission line, 467
device model parameters, 467
lumped transmission line, 475
device instance parameters, 475
device model parameters, 475

measure
error measure, 54
additional examples, 52
HSpice compatibility, 54
measurement output, 48
measurement windows, 48
Re-Measure, 49
suppressing measure output, 53
unsupported types, 54

memristor, 500
memristorpem
    device instance parameters, 505
    device model parameters, 505
memristorteam
    device instance parameters, 503
    device model parameters, 503
memristoryakopcic
    device instance parameters, 504
    device model parameters, 504
MESFET, 224
mesfet
    device instance parameters, 225
    device model parameters, 225
mextram 504.12.1
    device instance parameters, 212
    device model parameters, 212
mextram 504.12.1 with self heating
    device instance parameters, 216
    device model parameters, 216
Microsoft Windows, 555
model
    definition, 56
    level parameter, 57
    model interpolation, 57
    tempmodel, 57
MOSFET, 226
mosfet level 1
    device instance parameters, 239
    device model parameters, 239
mosfet level 2
    device instance parameters, 241
    device model parameters, 241
mosfet level 3
    device instance parameters, 243
    device model parameters, 243
mosfet level 6
    device instance parameters, 245
    device model parameters, 245
mutualinductor, 138
    B-H loop calculations, 144
    Converting nonlinear to linear mutual indcutors, 144
    mutual inductor equations, 142
mvs etsoi 2.0.0
    device model parameters, 457
mvs hemt 2.0.0
    device model parameters, 457
netlist
    commands, 26
    comment, 111
    expression operators, 112
    functions, 115
    in-line comment, 111
    line continuation, 111
    model definition, 122
    nodes, 128
    reference, 25
    subcircuit, 122
node
    composite parameters, 515, 516
Noise analysis, 60
nonlinear mutual inductor
    device model parameters, 139

Operating Point, 27
operating point analysis, 61
output
    control, 40
    save, 101

parallel
    computing, 23
parameters
    convergence, 540
PDE Devices, 123, 509
    1D instance parameters, 509, 513
    model parameters, 509
    Physical Models, 519
    time integration parameters, 67
POLY, 118
power calculations, 130
power grid, 488
power mosfet
    device instance parameters, 310
    device model parameters, 310
powergridbranch
    device instance parameters, 489
powergridbusshunt
    device instance parameters, 491
powergridgenbus
    device instance parameters, 495
powergridtransformer
    device instance parameters, 493
psp102va legacy mosfet 102.5
    device instance parameters, 344

device model parameters, 345
psp103va mosfet
device instance parameters, 357
device model parameters, 358
PSpice, 542, 547, 550
E device, 543
F device, 543
G device, 543
H device, 543
Probe, 85

rawfile, 557
ASCII, 557
binary, 558
region
composite parameters, 517
resistor, 145
device instance parameters, 147, 148
device model parameters, 147, 148
restart, 75
file, 76
two-level, 77
results
measure, 42
output control, 40
output options, 75
print, 26, 27, 35, 60, 84, 110
sens, 102

Sandia National Laboratories, 23
save operating point conditions, 101
sensitivity, 102
solvers
continuation
options, 71
control parameters, 62
hb
options, 68
homotopy
options, 71
linear
Aztec, 72
iterative (preconditioned Krylov methods), 72
options, 72, 74
sparse-direct, 72
Trilinos, 72
nonlinear
options, 68, 69, 541
nonlinear-transient
options, 70
sensitivity
options, 78
sensitivty
options, 77
time integration
options, 540
time integration, 110, 549
options, 64, 67
STEP analysis
Decade sweeps, 105
Linear sweeps, 104
List sweeps, 106
Octave sweeps, 106
step parametric analysis, 104
subcircuit, 107, 507
designation, 108
name, 107
nesting, 108
node zero, 108
scoping, 108

TCAD Devices, 509
Physical Models, 519
time integration parameters, 67
time step
size, 110, 549
transient analysis, 68, 109
error tolerances, 540
Trilinos, 72

Unix, 24
Users of PSpice, 542
Users of Xyce on Microsoft Windows, 555

VBIC (temperature considerations), 180
vbic 1.3 3t
device instance parameters, 190
device model parameters, 190
vbic 1.3 4t
device instance parameters, 195
device model parameters, 195
vbic 3t et cf v1.2
device instance parameters, 185
device model parameters, 185
voltage controlled current source, 173
voltage controlled voltage source, 170

Voltage Nodes, 128
voltage source
    current controlled, 174
    independent, 165
    nonlinear dependent, 175
    voltage controlled, 170

Y type digital devices, 482

DISTRIBUTION:

1 MS 0899 Technical Library, 9536

Sandia National Laboratories