# SANDIA REPORT

SAND2016-11715
Unlimited Release
Printed November 2016

# Xyce™ Parallel Electronic Simulator Reference Guide, Version 6.6

Eric R. Keiter, Karthik V. Aadithya, Ting Mei, Thomas V. Russo, Richard L. Schiek, Peter E. Sholander, Heidi K. Thornquist, Jason C. Verley

Prepared by
Sandia National Laboratories
Albuquerque, New Mexico 87185 and Livermore, California 94550

Sandia National Laboratories is a multi-mission laboratory managed and operated by Sandia Corporation, a wholly owned subsidiary of Lockheed Martin Corporation, for the U.S. Department of Energy's National Nuclear Security Administration under contract DE-AC04-94AL85000.

Approved for public release; further dissemination unlimited.

Sandia National Laboratories

Issued by Sandia National Laboratories, operated for the United States Department of Energy by Sandia Corporation.

**NOTICE:** This report was prepared as an account of work sponsored by an agency of the United States Government. Neither the United States Government, nor any agency thereof, nor any of their employees, nor any of their contractors, subcontractors, or their employees, make any warranty, express or implied, or assume any legal liability or responsibility for the accuracy, completeness, or usefulness of any information, apparatus, product, or process disclosed, or represent that its use would not infringe privately owned rights. Reference herein to any specific commercial product, process, or service by trade name, trademark, manufacturer, or otherwise, does not necessarily constitute or imply its endorsement, recommendation, or favoring by the United States Government, any agency thereof, or any of their contractors or subcontractors. The views and opinions expressed herein do not necessarily state or reflect those of the United States Government, any agency thereof, or any of their contractors.

Printed in the United States of America. This report has been reproduced directly from the best available copy.

Available to DOE and DOE contractors from
U.S. Department of Energy
Office of Scientific and Technical Information
P.O. Box 62
Oak Ridge, TN 37831

Telephone: (865) 576-8401
Facsimile: (865) 576-5728
E-Mail: reports@adonis.osti.gov
Online ordering: http://www.osti.gov/bridge

Available to the public from
U.S. Department of Commerce
National Technical Information Service
5285 Port Royal Rd
Springfield, VA 22161

Telephone: (800) 553-6847
Facsimile: (703) 605-6900
E-Mail: orders@ntis.fedworld.gov
Online ordering: http://www.ntis.gov/help/ordermethods.asp?loc=7-4-0#online

SAND2016-11715
Unlimited Release
Printed November 2016

# Xyce™ Parallel Electronic Simulator Reference Guide, Version 6.6

Eric R. Keiter, Karthik V. Aadithya, Ting Mei, Thomas V. Russo,
Richard L. Schiek, Peter E. Sholander, Heidi K. Thornquist, Jason C. Verley
Electrical Models and Simulation

Sandia National Laboratories
P.O. Box 5800, M/S 1177
Albuquerque, NM 87185-1177

**Abstract**

This document is a reference guide to the **Xyce** Parallel Electronic Simulator, and is a companion document to the **Xyce** Users' Guide [1] . The focus of this document is (to the extent possible) exhaustively list device parameters, solver options, parser options, and other usage details of **Xyce**. This document is *not* intended to be a tutorial. Users who are new to circuit simulation are better served by the **Xyce** Users' Guide [1] .

The information herein is subject to change without notice.

Copyright © 2002-2016 Sandia Corporation. All rights reserved.

## Acknowledgements

The BSIM Group at the University of California, Berkeley developed the BSIM3, BSIM4, BSIM6, BSIM-CMG and BSIM-SOI models.
The BSIM3 is Copyright © 1999, Regents of the University of California.
The BSIM4 is Copyright © 2006, Regents of the University of California.
The BSIM6 is Copyright © 2015, Regents of the University of California.
The BSIM-CMG is Copyright © 2012 and 2016, Regents of the University of California.
The BSIM-SOI is Copyright © 1990, Regents of the University of California.
All rights reserved.

The Mextram model has been developed by NXP Semiconductors until 2007, Delft University of Technology from 2007 to 2014, and Auburn University since April 2015.
Copyrights © of Mextram are with Delft University of Technology, NXP Semiconductors and Auburn University.

The MIT VS Model Research Group developed the MIT Virtual Source (MVS) model.
Copyright © 2013 Massachusetts Institute of Technology (MIT).

The EKV3 MOSFET model was developed by the EKV Team of the Electronics Laboratory-TUC of the Technical University of Crete.

## Trademarks

***Xyce***™ Electronic Simulator and ***Xyce***™ are trademarks of Sandia Corporation.

Orcad, Orcad Capture, PSpice and Probe are registered trademarks of Cadence Design Systems, Inc.

Microsoft, Windows and Windows 7 are registered trademarks of Microsoft Corporation.

Medici, DaVinci and Taurus are registered trademarks of Synopsys Corporation.

Amtec and TecPlot are trademarks of Amtec Engineering, Inc.

All other trademarks are property of their respective owners.

## Contacts

| | |
|---|---|
| World Wide Web | http://xyce.sandia.gov<br>https://info.sandia.gov/xyce (Sandia only) |
| Email | xyce@sandia.gov (outside Sandia)<br>xyce-sandia@sandia.gov (Sandia only) |
| Bug Reports (Sandia only) | http://joseki-vm.sandia.gov/bugzilla<br>http://morannon.sandia.gov/bugzilla |

# Contents

**1. Introduction** **21**

1.1 Overview . . . . . 22

1.2 How to Use this Guide . . . . . 22

Typographical conventions . . . . . 22

1.3 Third Party License Information . . . . . 23

**2. Netlist Reference** **25**

2.1 Netlist Commands . . . . . 26

2.1.1 `.AC` (AC Analysis) . . . . . 26

2.1.2 `.DC` (DC Sweep Analysis) . . . . . 27

Linear Sweeps . . . . . 27

Decade Sweeps . . . . . 27

Octave Sweeps . . . . . 27

List Sweeps . . . . . 27

2.1.3 `.DCVOLT` (Initial Condition, Bias point) . . . . . 29

2.1.4 `.END` (End of Circuit) . . . . . 30

2.1.5 `.ENDS` (End of Subcircuit) . . . . . 31

2.1.6 `.FOUR` (Fourier Analysis) . . . . . 32

2.1.7 `.FUNC` (Function) . . . . . 33

2.1.8 `.GLOBAL_PARAM` (Global parameter) . . . . . 34

2.1.9 `.HB` (Harmonic Balance Analysis) . . . . . 35

2.1.10 .IC (Initial Condition, Bias point) . . . . . 36
2.1.11 .INC or .INCLUDE (Include file) . . . . . 37
2.1.12 .LIB (Library file) . . . . . 38
.LIB call statement . . . . . 38
.LIB definition statement . . . . . 38
2.1.13 .MEASURE (Measure output) . . . . . 40
Measure Output . . . . . 48
Measurement Windows . . . . . 48
Re-Measure . . . . . 49
RISE, FALL and CROSS Qualifiers . . . . . 50
Additional Examples . . . . . 52
Suppresssing Measure Output . . . . . 53
ERROR Measure . . . . . 54
Behavior for Unsupported Types . . . . . 54
HSpice Compatibility . . . . . 54
2.1.14 .MODEL (Model Definition) . . . . . 56
**LEVEL** Parameter . . . . . 56
Model Interpolation . . . . . 56
2.1.15 .NODESET (Approximate Initial Condition, Bias point) . . . . . 59
2.1.16 .NOISE (Noise Analysis) . . . . . 60
2.1.17 .OP (Bias Point Analysis) . . . . . 61
2.1.18 .OPTIONS Statements . . . . . 62
.OPTIONS DEVICE (Device Package Options) . . . . . 62
.OPTIONS TIMEINT (Time Integration Options) . . . . . 64
.OPTIONS HBINT (Harmonic Balance Options) . . . . . 68
.OPTIONS NONLIN (Nonlinear Solver Options) . . . . . 69

.OPTIONS LOCA (Continuation and Bifurcation Tracking Package Options) . . . 71
.OPTIONS LINSOL (Linear Solver Options) . . . . . 73
.OPTIONS LINSOL-HB (Linear Solver Options) . . . . . 75
.OPTIONS OUTPUT (Output Options) . . . . . 75
.OPTIONS RESTART (Checkpointing Options) . . . . . 76
.OPTIONS RESTART (Restarting Options) . . . . . 77
.OPTIONS RESTART: special notes for use with two-level-Newton . . . . . 78
.OPTIONS SENSITIVITY (Direct and Adjoint Sensitivity Options) . . . . . 78
2.1.19 .PARAM (Parameter) . . . . . 79
2.1.20 .PREPROCESS REPLACEGROUND (Ground Synonym) . . . . . 80
2.1.21 .PREPROCESS REMOVEUNUSED (Removal of Unused Components) . . . . . 81
2.1.22 .PREPROCESS ADDRESISTORS (Adding Resistors to Dangling Nodes) . . . . . 82
2.1.23 .PRINT (Print output) . . . . . 84
Print AC Analysis . . . . . 90
Print DC Analysis . . . . . 91
Print Harmonic Balance Analysis . . . . . 91
Print Noise Analysis . . . . . 93
Print Transient Analysis . . . . . 93
Print Homotopy . . . . . 94
Print Sensitivity . . . . . 94
Parameter Stepping . . . . . 95
Device Parameters and Internal Variables . . . . . 97
2.1.24 .RESULT (Print results) . . . . . 99
Example Netlist . . . . . 99
2.1.25 .SAVE (Save operating point conditions) . . . . . 100
2.1.26 .SENS (Compute DC or transient sensitivities) . . . . . 101

2.1.27 .STEP (Step Parametric Analysis) . . . . . 103
Linear Sweeps . . . . . 103
Decade Sweeps . . . . . 104
Octave Sweeps . . . . . 104
List Sweeps . . . . . 104
2.1.28 .SUBCKT (Subcircuit) . . . . . 105
2.1.29 .TRAN (Transient Analysis) . . . . . 107
2.1.30 Miscellaneous Commands . . . . . 109
* (Comment) . . . . . 109
; (In-line Comment) . . . . . 109
+ (Line Continuation) . . . . . 109
2.2 Expressions . . . . . 110
2.2.1 Expressions in .PARAM or .GLOBAL_PARAM Statements . . . . . 114
2.2.2 Expressions in .PRINT Lines . . . . . 114
2.2.3 Limitations on Using Complex Values in Expressions . . . . . 115
2.2.4 Expressions for Device Instance and Model Parameters . . . . . 115
2.2.5 Special PSpice POLY expression . . . . . 116
Voltage-controlled sources . . . . . 117
Current-controlled sources . . . . . 117
B sources . . . . . 117
2.3 Devices . . . . . 119
2.3.1 Voltage Nodes . . . . . 125
Global nodes . . . . . 125
Subcircuit Nodes . . . . . 125
2.3.2 Legal Characters in Node and Device Names . . . . . 126
2.3.3 Lead Currents and Power Calculations . . . . . 127

2.3.4 Capacitor . . . . . 128
2.3.5 Inductor . . . . . 131
2.3.6 Mutual Inductors . . . . . 133
2.3.7 Resistor . . . . . 140
2.3.8 Diode . . . . . 145
2.3.9 Independent Current Source . . . . . 155
2.3.10 Independent Voltage Source . . . . . 160
2.3.11 Voltage Controlled Voltage Source . . . . . 165
2.3.12 Current Controlled Current Source . . . . . 167
2.3.13 Voltage Controlled Current Source . . . . . 168
2.3.14 Current Controlled Voltage Source . . . . . 169
2.3.15 Nonlinear Dependent Source . . . . . 170
2.3.16 Bipolar Junction Transistor (BJT) . . . . . 171
2.3.17 Junction Field-Effect Transistor (JFET) . . . . . 204
2.3.18 Metal-Semiconductor FET (MESFET) . . . . . 208
2.3.19 MOS Field Effect Transistor (MOSFET) . . . . . 210
Level 1 MOSFET Tables . . . . . 223
Level 2 MOSFET Tables (SPICE Level 2) . . . . . 225
Level 3 MOSFET Tables . . . . . 227
Level 6 MOSFET Tables (SPICE Level 6) . . . . . 229
Level 9 MOSFET Tables (BSIM3) . . . . . 231
Level 10 MOSFET Tables (BSIM SOI) . . . . . 245
Level 14 MOSFET Tables (BSIM4) . . . . . 267
Level 18 MOSFET Tables (VDMOS) . . . . . 294
Level 77 MOSFET Tables (BSIM6 version 6.1.1) . . . . . 298
Level 102 MOSFET Tables (PSP version 102.5) . . . . . 328

Level 103 MOSFET Tables (PSP version 103.4) . . . . . 341
Level 110 MOSFET Tables (BSIM CMG version 110.0.0) . . . . . 374
Level 107 MOSFET Tables (BSIM CMG version 107.0.0) . . . . . 410
Levels 2000 and 2001 MOSFET Tables (MVS version 2.0.0) . . . . . 441
Level 301 MOSFET Tables (EKV version 3.0.1) . . . . . 443
2.3.20 Lossy Transmission Line (LTRA) . . . . . 451
2.3.21 Voltage- or Current-controlled Switch . . . . . 453
2.3.22 Generic Switch . . . . . 456
2.3.23 Lossless (Ideal) Transmission Line . . . . . 457
2.3.24 Lumped Transmission Line . . . . . 459
2.3.25 Behavioral Digital Devices . . . . . 461
2.3.26 Y-Type Behavioral Digital Devices (Deprecated) . . . . . 466
2.3.27 Accelerated mass . . . . . 471
2.3.28 Power Grid . . . . . 472
2.3.29 Memristor Device . . . . . 484
2.3.30 Subcircuit . . . . . 488
2.4 TCAD Devices . . . . . 489
2.4.1 Physical Models . . . . . 496
Material Models and Parameters . . . . . 496
Effective Mass . . . . . 496
Electron Effective Mass . . . . . 496
Hole Effective Mass . . . . . 496
Intrinsic Carrier Concentration . . . . . 496
Bandgap . . . . . 497
2.4.2 Mobility Models . . . . . 499
Analytic Mobility . . . . . 499

Arora Mobility . . . . . 500
Carrier-Carrier Scattering Mobility . . . . . 501
Lombardi Surface Mobility Model . . . . . 503
Edge Mobilities . . . . . 505
Boundary Conditions for Electrode Contacts . . . . . 506
Neutral Contacts . . . . . 506
Schottky Contacts . . . . . 507
Metal-Oxide-Semiconductor Contacts . . . . . 511
NMOS Device . . . . . 511

**3. Command Line Arguments** **513**

**4. Runtime Environment** **515**

4.1 Running **Xyce** in Serial . . . . . 515
4.2 Running **Xyce** in Parallel . . . . . 515
4.3 Running **Xyce** on Sandia HPC and CEE Platforms . . . . . 515

**5. Setting Convergence Parameters for Xyce** **517**

5.1 Adjusting Transient Analysis Error Tolerances . . . . . 517
5.1.1 Setting RELTOL and ABSTOL . . . . . 517
5.2 Adjusting Nonlinear Solver Parameters (in transient mode) . . . . . 518

**6. Quick Reference for Users of Other SPICE Circuit Simulators** **519**

6.1 Differences Between **Xyce** and PSpice . . . . . 519
6.1.1 Command Line Options . . . . . 519
6.1.2 Device Support . . . . . 519
6.1.3 Netlist Support . . . . . 519
6.1.4 Converting PSpice ABM Models for Use in **Xyce** . . . . . 520

6.1.5 Usage of .STEP Analysis . . . . . 521
Global .PARAM Sweeps . . . . . 521
Model Parameter Sweeps . . . . . 521
6.1.6 Behavioral Digital Devices . . . . . 522
6.1.7 Power Dissipation . . . . . 522
6.1.8 Dependent Sources with TABLE Syntax . . . . . 522
6.1.9 MODEL STATEMENTS . . . . . 523
6.1.10 .NODESET and .IC Statements . . . . . 523
6.1.11 Piecewise Linear Sources . . . . . 523
6.1.12 Additional differences . . . . . 524
6.1.13 Translating Between PSpice and **Xyce** Netlists . . . . . 526
6.2 Differences Between **Xyce** and Other SPICE Simulators . . . . . 527
6.3 DC Operating Point Calculation Failures in **Xyce** . . . . . 529
6.3.1 Incompatible Voltage Constraints at Circuit Nodes . . . . . 529
6.3.2 Multiple Voltage Constraints From Subcircuits or at Global Nodes . . . . . 530
6.3.3 NODESET and IC Statements in Subcircuits . . . . . 530
6.3.4 No DC Path to Ground for a Current Flow . . . . . 531
6.3.5 Inductor Loops . . . . . 531
6.3.6 Infinite Slope Transistions . . . . . 531
6.3.7 Simulation Settings . . . . . 531

**7. Quick Reference for Microsoft Windows Users** **532**

**8. Rawfile Format** **533**
8.1 ASCII Format . . . . . 533
8.2 Binary Format . . . . . 534
8.3 Special Notes . . . . . 534

# List of Tables


1.1 **Xyce** typographical conventions. . . . . 22

2.1 RISE, FALL and CROSS Support in .MEASURE. . . . . 51

2.2 Options for Device Package . . . . . 63

2.3 Options for Time Integration Package. . . . . 64

2.4 Options for HB. . . . . 69

2.5 Options for Nonlinear Solver Package. . . . . 70

2.6 Options for Continuation and Bifurcation Tracking Package. . . . . 72

2.7 Options for Linear Solver Package. . . . . 73

2.8 Options for Linear Solver Package for HB. . . . . 75

2.9 Options for Sensitivity Package. . . . . 78

2.10 Print AC Analysis Type . . . . . 90

2.11 Print DC Analysis Type . . . . . 91

2.12 Print HB Analysis Type . . . . . 92

2.13 Print NOISE Analysis Type . . . . . 93

2.14 Print Transient Analysis Type . . . . . 94

2.15 Print Homotopy . . . . . 94

2.16 Print Sensitivities . . . . . 94

2.17 Print Transient Adjoint Sensitivities . . . . . 95

2.20 Operators . . . . . 110

2.21 Arithmetic Functions . . . . . 111

2.22 SPICE Compatibility Functions . . . . . 113
2.23 Analog Device Quick Reference. . . . . 119
2.23 Analog Device Quick Reference. . . . . 120
2.24 Features Supported by Xyce Device Models . . . . . 121
2.25 Capacitor Device Instance Parameters . . . . . 129
2.26 Capacitor Device Model Parameters . . . . . 130
2.27 Inductor Device Instance Parameters . . . . . 132
2.28 Inductor Device Model Parameters . . . . . 132
2.29 Nonlinear Mutual Inductor Device Model Parameters . . . . . 134
2.30 Resistor Device Instance Parameters . . . . . 142
2.31 Resistor Device Model Parameters . . . . . 142
2.32 Resistor Device Instance Parameters . . . . . 143
2.33 Resistor Device Model Parameters . . . . . 144
2.34 Diode Device Instance Parameters . . . . . 147
2.35 Diode Device Model Parameters . . . . . 147
2.36 JUNCAP200 Diode Device Instance Parameters . . . . . 148
2.37 JUNCAP200 Diode Device Model Parameters . . . . . 148
2.38 Pulse Parameters . . . . . 156
2.39 Sine Parameters . . . . . 156
2.40 Exponent Parameters . . . . . 156
2.41 Piecewise Linear Parameters . . . . . 157
2.42 Frequency Modulated Parameters . . . . . 158
2.43 Pulse Parameters . . . . . 161
2.44 Sine Parameters . . . . . 161
2.45 Exponent Parameters . . . . . 161
2.46 Piecewise Linear Parameters . . . . . 162

2.47 Frequency Modulated Parameters . . . . . 163
2.48 Bipolar Junction Transistor Device Instance Parameters . . . . . 173
2.49 Bipolar Junction Transistor Device Model Parameters . . . . . 174
2.50 VBIC 3T et cf v1.2 Device Instance Parameters . . . . . 178
2.51 VBIC 3T et cf v1.2 Device Model Parameters . . . . . 178
2.52 VBIC 1.3 3T Device Instance Parameters . . . . . 182
2.53 VBIC 1.3 4T Device Instance Parameters . . . . . 182
2.54 VBIC 1.3 3T Device Model Parameters . . . . . 183
2.55 VBIC 1.3 4T Device Model Parameters . . . . . 187
2.56 FBH HBT_X v2.1 Device Instance Parameters . . . . . 191
2.57 FBH HBT_X v2.1 Device Model Parameters . . . . . 191
2.58 MEXTRAM 504.12.1 Device Instance Parameters . . . . . 193
2.59 MEXTRAM 504.12.1 Device Model Parameters . . . . . 194
2.60 MEXTRAM 504.12.1 with self heating Device Instance Parameters . . . . . 197
2.61 MEXTRAM 504.12.1 with self heating Device Model Parameters . . . . . 197
2.62 JFET Device Instance Parameters . . . . . 205
2.63 JFET Device Model Parameters . . . . . 205
2.64 JFET Device Instance Parameters . . . . . 206
2.65 JFET Device Model Parameters . . . . . 206
2.66 MESFET Device Instance Parameters . . . . . 209
2.67 MESFET Device Model Parameters . . . . . 209
2.68 MOSFET level 1 Device Instance Parameters . . . . . 223
2.69 MOSFET level 1 Device Model Parameters . . . . . 223
2.70 MOSFET level 2 Device Instance Parameters . . . . . 225
2.71 MOSFET level 2 Device Model Parameters . . . . . 225
2.72 MOSFET level 3 Device Instance Parameters . . . . . 227

2.73 MOSFET level 3 Device Model Parameters . . . . . 227
2.74 MOSFET level 6 Device Instance Parameters . . . . . 229
2.75 MOSFET level 6 Device Model Parameters . . . . . 229
2.76 BSIM3 Device Instance Parameters . . . . . 231
2.77 BSIM3 Device Model Parameters . . . . . 232
2.78 BSIM3 SOI Device Instance Parameters . . . . . 245
2.79 BSIM3 SOI Device Model Parameters . . . . . 246
2.80 BSIM4 Device Instance Parameters . . . . . 267
2.81 BSIM4 Device Model Parameters . . . . . 268
2.82 Power MOSFET Device Instance Parameters . . . . . 294
2.83 Power MOSFET Device Model Parameters . . . . . 294
2.84 BSIM6 Device Instance Parameters . . . . . 298
2.85 BSIM6 Device Model Parameters . . . . . 299
2.86 PSP102VA legacy MOSFET 102.5 Device Instance Parameters . . . . . 328
2.87 PSP102VA legacy MOSFET 102.5 Device Model Parameters . . . . . 329
2.88 PSP103VA MOSFET Device Instance Parameters . . . . . 341
2.89 PSP103VA MOSFET Device Model Parameters . . . . . 342
2.90 BSIM-CMG FINFET v110.0.0 Device Instance Parameters . . . . . 374
2.91 BSIM-CMG FINFET v110.0.0 Device Model Parameters . . . . . 375
2.92 BSIM-CMG FINFET v107.0.0 Device Instance Parameters . . . . . 410
2.93 BSIM-CMG FINFET v107.0.0 Device Model Parameters . . . . . 411
2.94 MVS ETSOI 2.0.0 Device Model Parameters . . . . . 441
2.95 MVS HEMT 2.0.0 Device Model Parameters . . . . . 441
2.96 EKV3 MOSFET Device Instance Parameters . . . . . 443
2.97 EKV3 MOSFET Device Model Parameters . . . . . 443
2.98 Lossy Transmission Line Device Model Parameters . . . . . 451

2.99 Controlled Switch Device Model Parameters . . . . . 454
2.100 Ideal Transmission Line Device Instance Parameters . . . . . 457
2.101 Lumped Transmission Line Device Instance Parameters . . . . . 459
2.102 Lumped Transmission Line Device Model Parameters . . . . . 460
2.103 Behavioral Digital Device Instance Parameters . . . . . 462
2.104 Behavioral Digital Device Model Parameters . . . . . 463
2.105 DFF Truth-Table for DIGINITSTATE=3 . . . . . 465
2.106 DLTCH Truth-Table for DIGINITSTATE=3 . . . . . 465
2.107 JKFF Truth-Table for DIGINITSTATE=3 . . . . . 465
2.108 Behavioral Digital Device Instance Parameters . . . . . 467
2.109 Behavioral Digital Device Model Parameters . . . . . 468
2.110 PowerGridBranch Device Instance Parameters . . . . . 473
2.111 PowerGridBusShunt Device Instance Parameters . . . . . 475
2.112 PowerGridTransformer Device Instance Parameters . . . . . 477
2.113 PowerGridGenBus Device Instance Parameters . . . . . 479
2.114 MemristorTEAM Device Instance Parameters . . . . . 485
2.115 MemristorTEAM Device Model Parameters . . . . . 485
2.116 MemristorYakopcic Device Instance Parameters . . . . . 486
2.117 MemristorYakopcic Device Model Parameters . . . . . 486
2.118 1D PDE (level 1) Device Instance Parameters . . . . . 490
2.119 2D PDE (level 2) Device Instance Parameters . . . . . 492
2.120 PDE Device Model Parameters . . . . . 493
2.121 PDE Device Doping Region Parameters . . . . . 493
2.122 Description of the flatx, flaty doping parameters . . . . . 494
2.123 PDE Device Electrode Parameters. . . . . 494
2.124 Intrinsic Carrier Concentration Parameters . . . . . 497

2.125 Bandgap constants . . . . . 497
2.125 Bandgap constants . . . . . 498
2.126 Analytic Mobility Parameters . . . . . 500
2.127 Arora Mobility Parameters . . . . . 501
2.128 Carrier-Carrier Mobility Parameters . . . . . 503
2.129 Lombardi Surface Mobility Parameters . . . . . 505
2.130 Material workfunction values . . . . . 510
2.131 Electron affinities . . . . . 510

3.1 List of **Xyce** command line arguments. . . . . 513

6.1 Incompatibilities with PSpice. . . . . 524
6.2 Incompatibilities with Other Circuit Simulators. . . . . 527

7.1 Issues for Microsoft Windows. . . . . 532

8.1 **Xyce** ASCII rawfile format. . . . . 533
8.2 **Xyce** binary rawfile format. . . . . 534

# 1. Introduction

## Welcome to **Xyce**

The **Xyce** Parallel Electronic Simulator has been written to support, in a rigorous manner, the simulation needs of the Sandia National Laboratories electrical designers. It is targeted specifically to run on large-scale parallel computing platforms but also runs well on a variety of architectures including single processor workstations. It also aims to support a variety of devices and models specific to Sandia needs.

# 1.1 Overview

This document is intended to complement the **Xyce** Users' Guide [1] . It contains comprehensive, detailed information about a number of topics pertinent to the usage of **Xyce**. Included in this document is a netlist reference for the input-file commands and elements supported within **Xyce**; a command line reference, which describes the available command line arguments for **Xyce**; and quick-references for users of other circuit codes, such as Orcad's PSpice [2].

# 1.2 How to Use this Guide

This guide is designed so you can quickly find the information you need to use **Xyce**. It assumes that you are familiar with basic Unix-type commands, how Unix manages applications and files to perform routine tasks (e.g., starting applications, opening files and saving your work). Note that while Windows versions of **Xyce** are available, they are command-line programs meant to be run under the *Command Prompt*, and are used almost identically to their Unix counterparts.

## Typographical conventions

Before continuing in this Reference Guide, it is important to understand the terms and typographical conventions used. Procedures for performing an operation are generally indicated with the following typographical conventions.

| Notation | Example | Description |
|---|---|---|
| `Typewriter text` | `xmpirun -np 4` | Commands entered from the keyboard on the command line or text entered in a netlist. |
| **Bold Roman Font** | Set nominal temperature using the **TNOM** option. | SPICE-type parameters used in models, etc. |
| Gray Shaded Text | DEBUGLEVEL | Feature that is designed primarily for use by **Xyce** developers. |
| `[text in brackets]` | `Xyce [options] <netlist>` | Optional parameters. |
| `<text in angle brackets>` | `Xyce [options] <netlist>` | Parameters to be inserted by the user. |
| `<object with asterisk>*` | `K1 <ind. 1> [<ind. n>*]` | Parameter that may be multiply specified. |
| `<TEXT1\|TEXT2>` | `.PRINT TRAN`<br>`+ DELIMITER=<TAB\|COMMA>` | Parameters that may only take specified values. |

Table 1.1: **Xyce** typographical conventions.

## 1.3 Third Party License Information

A portion of the DAE time integrator code is derived from Lawrence Livermore National Laboratories' IDA code, which has the following license:


```
Copyright (c) 2002, The Regents of the University of California.
Produced at the Lawrence Livermore National Laboratory.
Written by Alan Hindmarsh, Allan Taylor, Radu Serban.
UCRL-CODE-2002-59
All rights reserved.

This file is part of IDA.

Redistribution and use in source and binary forms, with or without
modification, are permitted provided that the following conditions
are met:

1. Redistributions of source code must retain the above copyright
notice, this list of conditions and the disclaimer below.

2. Redistributions in binary form must reproduce the above copyright
notice, this list of conditions and the disclaimer (as noted below)
in the documentation and/or other materials provided with the
distribution.

3. Neither the name of the UC/LLNL nor the names of its contributors
may be used to endorse or promote products derived from this software
without specific prior written permission.

THIS SOFTWARE IS PROVIDED BY THE COPYRIGHT HOLDERS AND CONTRIBUTORS
"AS IS" AND ANY EXPRESS OR IMPLIED WARRANTIES, INCLUDING, BUT NOT
LIMITED TO, THE IMPLIED WARRANTIES OF MERCHANTABILITY AND FITNESS
FOR A PARTICULAR PURPOSE ARE DISCLAIMED. IN NO EVENT SHALL THE
REGENTS OF THE UNIVERSITY OF CALIFORNIA, THE U.S. DEPARTMENT OF ENERGY
OR CONTRIBUTORS BE LIABLE FOR ANY DIRECT, INDIRECT, INCIDENTAL,
SPECIAL, EXEMPLARY, OR CONSEQUENTIAL DAMAGES (INCLUDING, BUT NOT
LIMITED TO, PROCUREMENT OF SUBSTITUTE GOODS OR SERVICES; LOSS OF USE,
DATA, OR PROFITS; OR BUSINESS INTERRUPTION) HOWEVER CAUSED AND ON ANY
THEORY OF LIABILITY, WHETHER IN CONTRACT, STRICT LIABILITY, OR TORT
(INCLUDING NEGLIGENCE OR OTHERWISE) ARISING IN ANY WAY OUT OF THE USE
OF THIS SOFTWARE, EVEN IF ADVISED OF THE POSSIBILITY OF SUCH DAMAGE.


Additional BSD Notice
---------------------
1. This notice is required to be provided under our contract with
the U.S. Department of Energy (DOE). This work was produced at the
```

University of California, Lawrence Livermore National Laboratory
under Contract No. W-7405-ENG-48 with the DOE.

2. Neither the United States Government nor the University of California nor any of their employees, makes any warranty, express or implied, or assumes any liability or responsibility for the accuracy, completeness, or usefulness of any information, apparatus, product, or process disclosed, or represents that its use would not infringe privately-owned rights.

3. Also, reference herein to any specific commercial products, process, or services by trade name, trademark, manufacturer or otherwise does not necessarily constitute or imply its endorsement, recommendation, or favoring by the United States Government or the University of California. The views and opinions of authors expressed herein do not necessarily state or reflect those of the United States Government or the University of California, and shall not be used for advertising or product endorsement purposes.

**Xyce**'s expression library is based on that inside Spice 3f5 developed by the EECS Department at the University of California, which has the following license:

7/17/2007
Spice is covered now covered by the BSD Copyright:

Copyright (c) 1985-1991 The Regents of the University of California.
All rights reserved.

Permission is hereby granted, without written agreement and without license or royalty fees, to use, copy, modify, and distribute this software and its documentation for any purpose, provided that the above copyright notice and the following two paragraphs appear in all copies of this software.

IN NO EVENT SHALL THE UNIVERSITY OF CALIFORNIA BE LIABLE TO ANY PARTY FOR DIRECT, INDIRECT, SPECIAL, INCIDENTAL, OR CONSEQUENTIAL DAMAGES ARISING OUT OF THE USE OF THIS SOFTWARE AND ITS DOCUMENTATION, EVEN IF THE UNIVERSITY OF CALIFORNIA HAS BEEN ADVISED OF THE POSSIBILITY OF SUCH DAMAGE.

THE UNIVERSITY OF CALIFORNIA SPECIFICALLY DISCLAIMS ANY WARRANTIES, INCLUDING, BUT NOT LIMITED TO, THE IMPLIED WARRANTIES OF MERCHANTABILITY AND FITNESS FOR A PARTICULAR PURPOSE. THE SOFTWARE PROVIDED HEREUNDER IS ON AN "AS IS" BASIS, AND THE UNIVERSITY OF CALIFORNIA HAS NO OBLIGATION TO PROVIDE MAINTENANCE, SUPPORT, UPDATES, ENHANCEMENTS, OR MODIFICATIONS.

# 2. Netlist Reference

## Chapter Overview

This chapter contains reference material directed towards working with circuit analyses in **Xyce** using the netlist interface. Included are detailed command descriptions, start-up option definitions and a list of devices supported by the **Xyce** netlist interface.

# 2.1 Netlist Commands

This section outlines the netlist commands that can be used with **Xyce** to setup and control circuit analysis.

## 2.1.1 .AC (AC Analysis)

Calculates the frequency response of a circuit over a range of frequencies.

The .AC command can specify a linear sweep, decade logarithmic sweep, or octave logarithmic sweep.

**General Form**

```
.AC <sweep type> <points value>
+ <start frequency value> <end frequency value>
```

---

**Examples**

```
.AC LIN 101 100Hz 200Hz
.AC OCT 10 1kHz 16kHz
.AC DEC 20 1MEG 100MEG
```

---

**Arguments and Options**

`sweep type`
: Must be `LIN`, `OCT`, or `DEC`, as described below.

`LIN` Linear sweep
: The sweep variable is swept linearly from the starting to the ending value.

`OCT` Sweep by octaves
: The sweep variable is swept logarithmically by octaves.

`DEC` Sweep by decades
: The sweep variable is swept logarithmically by decades.

`points value`
: Specifies the number of points in the sweep, using an integer.

`start frequency value`
`end frequency value`
: The end frequency value must not be less than the start frequency value, and both must be greater than zero. The whole sweep must include at least one point.

---

**Comments**

AC analysis is a linear analysis. The simulator calculates the frequency response by linearizing the circuit around the bias point.

A `.PRINT AC` must be used to get the results of the AC sweep analysis. See Section 2.1.23.

### 2.1.2 .DC (DC Sweep Analysis)

Calculates the operating point for the circuit for a range of values. Primarily, this capability is applied to independent voltage sources, but it can also be applied to most device parameters. Note that this may be repeated for multiple sources in the same .DC line.

The .DC command can specify a linear sweep, decade logarithmic sweep, octave logarithmic sweep, or a list of values.

#### Linear Sweeps

**General Form**

```
.DC [LIN] <sweep variable name> <start> <stop> <step>
+ [<sweep variable name> <start> <stop> <step>]*
```

---

**Examples**

```
.DC LIN V1 5 25 5
.DC VIN -10 15 1
.DC R1 0 3.5 0.05 C1 0 3.5 0.5
```

---

**Comments**

A .PRINT DC must be used to get the results of the DC sweep analysis. See Section 2.1.23.

A .OP comand will result in a linear DC analysis if there is no .DC specified.

#### Decade Sweeps

**General Form**

```
.DC DEC <sweep variable name> <start> <stop> <points>
+ [DEC <sweep variable name> <start> <stop> <points>]*
```

---

**Examples**

```
.DC DEC VIN 1 100 2
.DC DEC R1 100 10000 3 DEC VGS 0.001 1.0 2
```

#### Octave Sweeps

**General Form**

```
.DC OCT <sweep variable name> <start> <stop> <points>
+ [OCT <sweep variable name><start> <stop> <points>]...
```

---

**Examples**

```
.DC OCT VIN 0.125 64 2
.DC OCT R1 0.015625 512 3 OCT C1 512 4096 1
```

#### List Sweeps

**General Form**

```
.DC <sweep variable name> LIST <val> <val> <val>*
+ [ <sweep variable name> LIST <val> <val>* ]*
```

**Examples**

```
.DC VIN LIST 1.0 2.0 5.0 6.0 10.0
.DC VDS LIST 0 3.5 0.05 VGS LIST 0 3.5 0.5
.DC TEMP LIST 10.0 15.0 18.0 27.0 33.0
```

### 2.1.3 `.DCVOLT` (Initial Condition, Bias point)

The `.DCVOLT` sets initial conditions for an operating point calculation. It is identical in function to the `.IC` command. See section 2.1.10 for detailed guidance.

### 2.1.4 .END (End of Circuit)

Marks the end of netlist file.

### 2.1.5 .ENDS (End of Subcircuit)

Marks the end of a subcircuit definition.

### 2.1.6 .FOUR (Fourier Analysis)

Performs Fourier analysis of transient analysis output.

**General Form**

```
.FOUR <freq> <ov> [ov]*
```

**Examples**

```
.FOUR 100K v(5)
.FOUR 1MEG v(5,3) v(3)
```

**Arguments and Options**

`freq`
: The fundamental frequency used for Fourier analysis. Fourier analysis is performed over the last period (`1/freq`) of the transient simulation. The DC component and the first nine harmonics are calculated.

`ov`
: The desired solution variable, or variables, to be analyzed. Fourier analysis can be performed on several solution variables for each fundamental frequency, `freq`. At least one solution variable must be specified in the `.FOUR` line. The available solution variables are:

- `V(<circuit node>)` the voltage at `<circuit node>`
- `V(<circuit node>,<circuit node>)` to output the voltage difference between the first `<circuit node>` and second `<circuit node>`
- `I(<device>)` the current through a two terminal device
- `I<lead abbreviation>(<device>)` the current into a particular lead of a three or more terminal device (see the Comments, below, for details)
- `N(<device parameter>)` a specific device parameter (see the individual devices in Section 2.3 for syntax)

**Comments**

Multiple `.FOUR` lines may be used in a netlist. All results from Fourier analysis will be returned to the user in a file with the same name as the netlist file suffixed with a `.FOUR`.

`<lead abbreviation>` is a single character designator for individual leads on a device with three or more leads. For bipolar transistors these are: c (collector), b (base), e (emitter), and s (substrate). For mosfets, lead abbreviations are: d (drain), g (gate), s (source), and b (bulk). SOI transistors have: d, g, s, e (bulk), and b (body). For PDE devices, the nodes are numbered according to the order they appear, so lead currents are referenced like I1(`<device>`), I2(`<device>`), etc.

### 2.1.7 .FUNC (Function)

User defined functions that can be used in expressions appearing later in the same scope as the .FUNC statement.

**General Form**

```
.FUNC <name>([arg]*) {<body>}
```

---

**Examples**

```
.FUNC E(x) {exp(x)}
.FUNC DECAY(CNST) {E(-CNST*TIME)}
.FUNC TRIWAV(x) {ACOS(COS(x))/3.14159}
.FUNC MIN3(A,B,C) {MIN(A,MIN(B,C))}
```

---

**Arguments and Options**

`name`
: Function name. Functions cannot be redefined and the function name must not be the same as any of the predefined functions (e.g., SIN and SQRT).

`arg`
: The arguments to the function. .FUNC arguments cannot be node names. The number of arguments in the use of a function must agree with the number in the definition. Parameters, TIME, and other functions are allowed in the body of function definitions. Two constants EXP and PI cannot be used a argument names. These constants are equal to $e$ and $\pi$, respectively, and cannot be redefined.

`body`
: May refer to other (previously defined) functions; the second example, DECAY, uses the first example, E.

---

**Comments**

The <body> of a defined function is handled in the same way as any math expression; it must be enclosed in curly braces .

### 2.1.8 .GLOBAL_PARAM (Global parameter)

User-defined global parameter, which can be time dependent, or can be used in .STEP loops.

**General Form**

```
.GLOBAL_PARAM [<name>=<value>]*
```

---

**Examples**

```
.GLOBAL_PARAM T={27+100*time}
```

```
name
    Name of the global parameter.

value
    Global parameter value.  An expression is used for the value
    when specified within curly braces ({}).
```

---

**Comments**

You may use parameters defined by .PARAM in expressions used to define global parameters, but you may *not* use global parameters in .PARAM definitions.

Unlike .PARAM parameters, global parameters are evaluated at the time they are needed. They may, therefore, be time dependent, and may depend on other time dependent quantities in the circuit.

Global parameters are accessible, and have the same value, throughout all levels of the netlist hierarchy. It is not legal to redefine global parameters in different levels of the netlist hierarchy.

### 2.1.9 .HB (Harmonic Balance Analysis)

Calculates steady states of nonlinear circuits in the frequency domain.

**General Form**

```
.HB <fundamental frequencies>
```

---

**Examples**

```
.HB 1e4
.hb 1e4 2e2
```

---

**Arguments and Options**

`fundamental frequencies`
: Sets the fundamental frequencies for the analysis.

---

**Comments**

Harmonic balance analysis calculates the magnitude and phase of voltages and currents in a nonlinear circuit. Use a `.OPTIONS HBINT` statement to set additional harmonic balance analysis options.

The `.PRINT HB` statement must be used to get the results of the harmonic balance analysis. See section 2.1.23.

### 2.1.10 .IC (Initial Condition, Bias point)

The .IC/.DCVOLT command sets initial conditions for operating point calculations. These operating point conditions will be enforced the entire way through the nonlinear solve. Initial conditions can be given for some or all of the circuit nodes.

As the conditions are enforced for the entire solve, only the nodes not specified with .IC statements will change over the course of the operating point calculation.

Note that it is possible to specify conditions that are not solvable. Consult the **Xyce** User's Guide for more guidance.

**General Form**

```
.IC V(<node>)=<value>
.IC <node> <value>
.DCVOLT V(<node>)=<value>
.DCVOLT <node> <value>
```

---

**Examples**

```
.IC V(2)=3.1
.IC 2 3.1
.DCVOLT V(2)=3.1
.DCVOLT 2 3.1
```

---

**Comments**

The .IC capability can only set voltage values, not current values.

The .IC capability can not be used, within subcircuits, to set voltage values on global nodes.

### 2.1.11 `.INC` or `.INCLUDE` (Include file)

Include specified file in netlist.

The file name can be surrounded by double quotes, ”filename”, but this is not necessary. The directory for the include file is assumed to be the execution directory unless a full or relative path is given as a part of the file name.

**General Form**

```
.INC <include file name>
.INCLUDE <include file name>
```

---

**Examples**

```
.INC models.lib
.INC "models.lib"
.INCLUDE models.lib
.INCLUDE "path_to_library/models.lib"
```

### 2.1.12 .LIB (Library file)

The .LIB command is similar to .INCLUDE, in that it brings in an external file. However, it is designed to only bring in specific parts of a library file, as designated by an entry name. Note that the **Xyce** version of .LIB has been designed to be compatible with HSPICE [3], not PSpice [4].

There are two forms of the .LIB statement, the call and the definition. The call statement reads in a specified subset of a library file, and the definition statement defines the subsets.

#### .LIB call statement

**General Form**

```
.LIB <file name> <entry name>
```

---

**Examples**

```
.LIB models.lib nom
.LIB "models.lib"  low
.LIB "path/models.lib"  high
```

---

**Arguments and Options**

`file name`
: Name of file containing netlist data. Double quotes (") may be used around the file name.

`entry name`
: Entry name, which determines the section of the file to be included. These sections are defined in the included file using the definition form of the .LIB statement.

The library file name can be surrounded by double quotes, as in ”path/filename” but this is not necessary. The directory for the library file is assumed to be the execution directory unless a full or relative path is given as a part of the file name. The section name denotes the section or sections of the library file to include.

#### .LIB definition statement

The format given above is when the .LIB command is used to reference a library file; however, it is also used as part of the syntax in a library file.

**General Form**

```
.LIB <entry name>
<netlist lines>*
.endl <entry name>
```

---

**Examples**

```
* Library file res.lib
.lib low
```

```
.param rval=2
r3  2  0  9
.endl low

.lib nom
.param rval=3
r3  2  0  8
.endl nom
```

---

**Arguments and Options**

`entry name`
: The name to be used to identify this library component. When used on a `.LIB` call line, these segments of the library file will be included in the calling file.

Note that for each entry name, there is a matched `.lib` and `.endl`. Any valid netlist commands can be placed inside the `.lib` and `.endl` statements. The following is an example calling netlist, which refers to the library in the examples above:

```
* Netlist file res.cir
V1  1   0   1
R   1   2   {rval}
.lib res.lib nom
.tran 1 ps 1ns
.end
```

In this example, only the netlist commands that are inside of the “nom” library will be parsed, while the commands inside of the “low” library will be discarded. As a result, the value for resistor r3 is 8, and the value for rval is 3.

### 2.1.13 .MEASURE (Measure output)

The .MEASURE statement allows calculation or reporting of simulation metrics to an external file, as well as to the standard output and/or a log file. One can measure when simulated signals reach designated values, or when they are equal to other simulation values. The .MEASURE statement is only supported for .TRAN analyses and .STEP when used with a .TRAN.

The syntaxes for the .MEASURE statements are as follows:

**General Form**

```
.MEASURE TRAN <result name> AVG <variable>
+ [MIN_THRESH=<value>] [MAX_THRESH=<value>]
+ [FROM=<time>] [TO=<time>] [TD=<time>]
+ [RISE=r|LAST] [FALL=f|LAST] [CROSS=c|LAST] [RFC_LEVEL=<value>]
+ [DEFAULT_VAL=<value>] [PRECISION=<value>] [PRINT=<value>]

.MEASURE TRAN <result name> DERIV <variable> AT=<value>
+ [MINVAL=<value>] [DEFAULT_VAL=<value>]
+ [PRECISION=<value>] [PRINT=<value>]

.MEASURE TRAN <result name> DERIV <variable>
+ WHEN <variable>=<variable2>|<value>
+ [MINVAL=<value>] [FROM=<value>] [TO=<value>] [TD=<value>]
+ [RISE=r|LAST] [FALL=f|LAST] [CROSS=c|LAST] [RFC_LEVEL=<value>]
+ [DEFAULT_VAL=<value>] [PRECISION=<value>] [PRINT=<value>]

.MEASURE TRAN <result name> DUTY <variable>
+ [ON=<value>] [OFF=<value>] [MINVAL=<value>]
+ [FROM=<value>] [TO=<value>] [TD=<value>]
+ [RISE=r|LAST] [FALL=f|LAST] [CROSS=c|LAST] [RFC_LEVEL=<value>]
+ [DEFAULT_VAL=<value>] [PRECISION=<value>] [PRINT=<value>]

.MEASURE TRAN <result name> EQN <expression>
+ [FROM=<value>] [TO=<value>] [TD=<value>]
+ [DEFAULT_VAL=<value>] [PRECISION=<value>] [PRINT=<value>]

.MEASURE TRAN <result name> ERROR <variable> FILE=<value>
+ INDEPVARCOL=<value> DEPVARCOL=<value> [COMP_FUNCTION=<value>]

.MEASURE TRAN <result name> FIND <variable>
+ WHEN <variable>=<variable2>|<value>
+ [FROM=<value>] [TO=<value>] [TD=<value>]
+ [RISE=r|LAST] [FALL=f|LAST] [CROSS=c|LAST] [RFC_LEVEL=<value>]
+ [MINVAL=<value>] [DEFAULT_VAL=<value>]
+ [PRECISION=<value>] [PRINT=<value>]

.MEASURE TRAN <result name> FOUR <variable> AT=freq
+ [NUMFREQ=<value>] [GRIDSIZE=<value>]
```

```
+ [FROM=<value>] [TO=<value>] [TD=<value>]
+ [DEFAULT_VAL=<value>] [PRECISION=<value>] [PRINT=<value>]

.MEASURE TRAN <result name> FREQ <variable>
+ [ON=<value>] [OFF=<value>] [MINVAL=<value>]
+ [FROM=<value>] [TO=<value>] [TD=<value>]
+ [DEFAULT_VAL=<value>] [PRECISION=<value>] [PRINT=<value>]

.MEASURE TRAN <result name> INTEG <variable>
+ [FROM=<value>] [TO=<value>] [TD=<value>]
+ [RISE=r|LAST] [FALL=f|LAST] [CROSS=c|LAST] [RFC_LEVEL=<value>]
+ [DEFAULT_VAL=<value>] [PRECISION=<value>] [PRINT=<value>]

.MEASURE TRAN <result name> MAX <variable>
+ [FROM=<value>] [TO=<value>] [TD=<value>]
+ [RISE=r|LAST] [FALL=f|LAST] [CROSS=c|LAST] [RFC_LEVEL=<value>]
+ [DEFAULT_VAL=<value>] [PRECISION=<value>]
+ [PRINT=<value>] [OUTPUT=<value>]

.MEASURE TRAN <result name> MIN <variable>
+ [FROM=<value>] [TO=<value>] [TD=<value>]
+ [RISE=r|LAST] [FALL=f|LAST] [CROSS=c|LAST] [RFC_LEVEL=<value>]
+ [DEFAULT_VAL=<value>] [PRECISION=<value>]
+ [PRINT=<value>] [OUTPUT=<value>]

.MEASURE TRAN <result name> OFF_TIME <variable>
+ [OFF=<value>] [MINVAL=<value>]
+ [FROM=<value>] [TO=<value>] [TD=<value>]
+ [DEFAULT_VAL=<value>] [PRECISION=<value>] [PRINT=<value>]

.MEASURE TRAN <result name> ON_TIME <variable>
+ [ON=<value>] [MINVAL=<value>]
+ [FROM=<value>] [TO=<value>] [TD=<value>]
+ [DEFAULT_VAL=<value>] [PRECISION=<value>] [PRINT=<value>]

.MEASURE TRAN <result name> PP <variable>
+ [FROM=<value>] [TO=<value>] [TD=<value>]
+ [RISE=r|LAST] [FALL=f|LAST] [CROSS=c|LAST] [RFC_LEVEL=<value>]
+ [DEFAULT_VAL=<value>] [PRECISION=<value>] [PRINT=<value>]

.MEASURE TRAN <result name> RMS <variable>
+ [FROM=<value>] [TO=<value>] [TD=<value>]
+ [RISE=r|LAST] [FALL=f|LAST] [CROSS=c|LAST] [RFC_LEVEL=<value>]
+ [DEFAULT_VAL=<value>] [PRECISION=<value>] [PRINT=<value>]

.MEASURE TRAN <result name> WHEN <variable>=<variable2>|<value>
+ [FROM=<value>] [TO=<value>] [TD=<value>]
+ [RISE=r|LAST] [FALL=f|LAST] [CROSS=c|LAST] [RFC_LEVEL=<value>]
```

```
+ [MINVAL=<value>] [DEFAULT_VAL=<value>]
+ [PRECISION=<value>] [PRINT=<value>]

.MEASURE TRAN <result name> TRIG <variable>=<variable2>|<value>
+ [RISE=r1|LAST] [FALL=f1|LAST] [CROSS=c1|LAST]
+ TARG <variable3>=<variable4>|<value>
+ [RISE=r2|LAST] [FALL=f2|LAST] [CROSS=c2|LAST]
+ [FROM=<value>] [TO=<value>] [TD=<value>]
+ [DEFAULT_VAL=<value>] [PRECISION=<value>] [PRINT=<value>]

.MEASURE TRAN <result name> TRIG AT=<value>
+ TARG <variable2>=<variable3>|<value>
+ [RISE=r2|LAST] [FALL=f2|LAST] [CROSS=c2|LAST]
+ [FROM=<value>] [TO=<value>] [TD=<value>]
+ [DEFAULT_VAL=<value>] [PRECISION=<value>] [PRINT=<value>]
```

---

**Examples**

```
.MEASURE TRAN hit1_75 WHEN V(1)=0.75 MINVAL=0.02
.MEASURE TRAN hit2_75 WHEN V(1)=0.75 MINVAL=0.08 RISE=2
.MEASURE TRAN avgAll AVG V(1)
.MEASURE TRAN dutyAll DUTY V(1) ON=0.75 OFF=0.25
```

---

**Arguments and Options**

`result name`

Measured results are reported to the output and log file. Additionally results are stored in a file called `circuitFileName.mt#`, where the suffixed number (`#` starts at `0` and increases for multiple iterations (`.STEP`) iterations) of a given simulation. Each line of this file will contain the measurement name, `<result name>`, followed by its value for that run. The `<result name>` must be a legal **Xyce** character string.

`measure type`

`AVG, DERIV, DUTY, EQN, ERROR, FREQ, FOUR, INTEG, MAX, MIN, OFF_TIME, ON_TIME, PP, RMS, WHEN, TRIG, TARG`

The third argument specifies the type of measurement or calculation to be done. The only exception is the `TARG` clause which comes later in the argument list, after the `TRIG` clause has been specified.

By default, the measurement is perfomed over the entire simulation. The calculations can be limited to a specific measurement window by using the qualifiers `FROM`, `TO`, `TD`, `RISE`, `FALL`, `CROSS` and `MINVAL`, which are explained below.

The supported measure types and their definitions are:

`AVG` Computes the arithmetic mean of `<variable>` for the simulation, or within the extent of the measurement window. The qualifiers

FROM, TO, TD, RISE, FALL and CROSS can be used to limit the measurement window.

DERIV Computes the derivative of <variable> at a user-specified time (by using the AT qualifier) or when a user-specified condition occurs (by using the WHEN qualifier). If the WHEN qualifier is used then the measurement window can be limited with the qualifiers FROM, TO, TD, RISE, FALL and CROSS. The MINVAL qualifier is used as a comparison tolerance for both AT and WHEN. For HSpice compatibility, DERIVATIVE is an allowed synonym for DERIV.

DUTY Fraction of time that <variable> is greater than ON and does not fall below OFF either for the entire simulation, or the measurement window. The qualifier MINVAL is used as a tolerance on the ON and OFF values, so that the thresholds become (ON − MINVAL) and (OFF − MINVAL). The temporal measurement window can be limited with the qualifiers FROM, TO, TD, RISE, FALL and CROSS

EQN Calculates the value of <expression> during the simulation. The measurement window can be limited with the qualifiers FROM, TO and TD. As noted in the "Additional Examples" subsection, the expression can use the results of other measure statements.

ERROR Calculates the norm between the measured waveform and a "comparison waveform" specified in a file. The supported norms are L1, L2 and INFNORM. The default norm is the L2 norm.

FIND-WHEN Returns the value of <variable> at the time when the WHEN clause is satisfied. The WHEN clause is described in more detail later in this list.

FOUR Calculates the fourier transform of the transient waveform for <variable>, given the fundamental frequency AT. All frequencies output by the measure will be multiples of that fundamental frequency, and will always start at that fundamental frequency. The values of the DC component and the first NUMFREQ-1 harmonics are determined using an interpolation of GRIDSIZE points. The default values for NUMFREQ and GRIDSIZE are 10 and 200, respectively. The measurement window can be limited with the qualifiers FROM, TO and TD.

FREQ An estimate of the frequency of <variable>, found by cycle counting during the simulation. Cycles are defined through the values of ON and OFF with MINVAL being used as a tolerance so that the thresholds becomes (ON − MINVAL) and (OFF + MINVAL).

INTEG Calculates the integral of outVal through second order numerical integration. The integration window can be limited with the qualifiers FROM, TO, TD, RISE, FALL and CROSS. For HSpice compatibility, INTEGRAL is an allowed synonym for INTEG.

MAX Returns the maximum value of <variable> during the simulation. The measurement window can be limited with the qualifiers FROM, TO, TD, RISE, FALL and CROSS.

MIN Returns the minimum value of <variable> during the simulation. The measurement window can be limited with the qualifiers FROM,

TO, TD, RISE, FALL and CROSS.

OFF_TIME Returns the time that <variable> is below OFF during the simulation or measurement window, normalized by the number of cycles of the waveform during the simulation or measurement window. OFF uses MINVAL as a tolerance, and the threshold becomes (OFF + MINVAL). The measurement window can be limited with the qualifiers FROM, TO and TD.

ON_TIME Returns the time that <variable> is above ON during the simulation or measurement window, normalized by the number of cycles of the waveform during the simulation or measurement window. ON uses MINVAL as a tolerance, and the threshold becomes (ON − MINVAL). The measurement window can be limited with the qualifiers FROM, TO and TD.

PP Returns the difference between the maximum value and the minimum value <variable> during the simulation. The measurement window can be limited with the qualifiers FROM, TO, TD, RISE, FALL and CROSS.

RMS Computes the root-mean-squared value of <variable> during the simulation. The measurement window can be limited with the qualifiers FROM, TO, TD, RISE, FALL and CROSS.

TRIG

TARG Measures the time between a trigger event and a target event. The trigger is specified with TRIG <variable>=<variable$_2$> or TRIG <variable>=<value> or TRIG AT=<value>. Likewise, the the target is specified as TARG <variable$_3$>=<variable$_4$> or TRIG <variable$_3$>=<value>. It is also possible to use this measure to find a rise time for variable when the rise time is defined as the time to go from some small fraction of the maxima to some other fraction of the maxima. For example, the syntax for finding a rise time from 10% to 90% of the maxima is:

```
TRIG V(node) FRAC_MAX=0.1 TARG V(node) FRAC_MAX=0.9
```

WHEN Returns the time when <variable> reaches <variable$_2$> or the constant value, value. The time over which the value is searched can be limited by the qualifiers TO, FROM, TD, RISE, FALL and CROSS. The qualifier MINVAL acts as a tolerance for the comparison. For example when <variable$_2$> is specified, the comparison used is when <variable> = <variable$_2$> ± MINVAL or when a constant, value is given: <variable> = value ± MINVAL. If the conditions specified for finding a given value were not found during the simulation then the measure will return the default value of -1. The user may change this default value with the DEFAULT_VAL qualifier described below. Note: The use of FIND and WHEN in one measure statement is also supported.

variable

variable$_n$

value

These quantities represents the test for the stated measurement. <variable>

is a simulation quantity, such as a voltage or current. One can compare it to another simulation variable or a fixed quantity. Additionally, the `<variable>` may be a **Xyce** expression deliminted by { } brackets. As noted above, an example is `V(1)=0.75`

`AT=value`
: A time *at which* the measurement calculation will occur. This is used by the `DERIV` measure and the `TRIG` clause. Note that ill-considered use of the `FROM`, `TO`, `TD` and `AT` qualifiers in the same `TRIG-TARG` measure statement can cause an empty measurement window, and thus a failed measure.

`FROM=value`
: A time *after which* the measurement calculation will start.

`TO=value`
: A time *at which* the measurement calculation will stop.

`TD=value`
: A time delay before which this measurement should be taken or checked. Note that ill-considered use of both `FROM` and `TO` qualifiers and a `TD` qualifier in the same measure statement can cause an empty measurement window, and thus a failed measure.

`MIN_THRESH=value`
: A minimum threshold value above which the measurement calculation will be done and below which it will not be done. This is only used by the `AVG` measure.

`MAX_THRESH=value`
: A maximum threshold value above which the measurement calculation will not be done and below which it will be done. This is only used by the `AVG` measure.

`RISE=r|LAST`
: The number of rises after which the measurement should be checked. If `LAST` is specified, then the last rise found in the simulation will be used. It is recommended that only one of the qualifiers `RISE`, `FALL` or `CROSS` be used in a given measure statement. The exception is `TRIG-TARG` measures. In that case, different `RISE`, `FALL` and `CROSS` criteria can be specified for `TRIG` and `TARG`.

`FALL=f|LAST`
: The number of falls after which the measurement should be checked. If `LAST` is specified, then the last fall found in the simulation will be used.

`CROSS=c|LAST`
: The number of zero crossings after which the measurement should be checked. If `LAST` is specified, then the last zero crossing found in the simulation will be used.

RFC_LEVEL=value

The level used to calculate rises, falls and crosses when the "level-crossing" mode is used. Its usage is discussed further in the subsection on "Rise, Fall and Cross Qualifiers". RFC_LEVEL is used by the AVG, DERIV, DUTY, FIND-WHEN, INTEG, MAX, MIN, PP, RMS and WHEN measures.

MINVAL=value

An allowed difference between outVal and the variable to which it is being compared. This has a default value of 1.0e-12. One may need to specify a larger value to avoid missing the test condition in a transient run. MINVAL is used by the DERIV, DUTY, FREQ, OFF_TIME and ON_TIME and WHEN measures. The descriptions of those measures detail how MINVAL is used by each measure.

FRAC_MAX=value

A fractional value of the maximum value of <variable>. This is useful for ensemble runs where the maximum value of a waveform is not known in advance. FRAC_MAX is used by the TRIG and TARG measures.

ON=value

The value at which a signal is considered to be "on" for FREQ, DUTY and ON_TIME measure calculations. This has a default value of 0.

OFF=value

The value at which a signal is considered to be "off" for FREQ, DUTY and ON_TIME measure calculations. This has a default value of 0.

DEFAULT_VAL=value

If the conditions specified for finding a given value are not found during the simulation then the measure will return the default value of -1 in the circuitFileName.mt# files. The measure value in the standard output or log file will be FAILED. The default return value for the circuitFileName.mt# files is settable by the user for each measure by adding the qualifier DEFAULT_VAL=<retval> on that measure line. As examples, a measure will fail if the condition specified by a WHEN or AT qualifier is not found. It will also fail if the user specifies a set of FROM, TO and TD values for a given measure that yields an empty measurement interval.

PRECISION=value

The default precision for .MEASURE output is 6 digits after the decimal point. This argument provides a user configurable precision for a given .MEASURE statement that applies to both the .mt# files and standard output.

PRINT=value

This parameter controls where the .MEASURE output appears. The default is ALL, which produces measure output in both the .mt0 file and to standard output. A value of STDOUT only produces measure output to standard output, while a value of NONE suppresses the measure output to both the .mt0 file and standard output. The subsection on

"Suppresing Measure Output" gives examples.

`OUTPUT=value`

This parameter is only supported for the `MAX` and `MIN` measures. The default is `VALUE`. A value of `VALUE` will print the maximum (or minimum) value to the `.mt0` file. A value of `TIME` will print the time of the maximum (or minimum) value to the `.mt0` file. This parameter does not affect the descriptive output that is printed to standard output. The "Additional Examples" subsection gives an example for the `MAX` measure.

`VAL=value`

This parameter is only implemented for the `TRIG` and `TARG` measures. It is not the preferred **Xyce** syntax. It is only supported for HSpice compatibility (see that subsection, below, for details).

`GOAL=value`

This parameter is not implemented in **Xyce**, but is included for compatability with HSPICE netlists.

`WEIGHT=value`

This parameter is not implemented in **Xyce**, but is included for compatability with HSPICE netlists.

`FILE=value`

The filename for the "comparison file" used for the `ERROR` measure. This qualifier is required for the `ERROR` measure.

`INDEPVARCOL=value`

The column index, in the "comparison file", of the independent variable (e.g, the simulation time) used in an `ERROR` measure. This qualifier is required for the `ERROR` measure,, and must be different from the value of the `DEPVARCOL` qualifier. Also, note that the column indices in Xyce output files start with 0.

`DEPVARCOL=value`

The column index, in the "comparison file", of the dependent variable used in an `ERROR` measure. This qualifier is required for the `ERROR` measure, and must be different from the value of the `INDEPVARCOL` qualifier. Also, note that the column indices in Xyce output files start with 0.

`COMP_FUNCTION=value`

This is the norm used by the `ERROR` measure to compare the simulation values for the measured variable with the corresponding values in the "comparison file" specified with the `FILE` qualifier. The allowed values are `L1NORM`, `L2NORM` and `INFNORM`. Any other values will default to `L2NORM`. This qualifier is optional for the `ERROR` measure, and has a default value of `L2NORM`.

## Measure Output

A user-defined measure can be output at each time-step via inclusion in a .PRINT command. For example, this netlist excerpt outputs the integral of `V(1)` at each time step. The measure value `TINTV1` is then also output at the end of the simulation.

```
.MEASURE TRAN TINTV1 INTEG V(1)
.PRINT TRAN FORMAT=NOINDEX V(1) TINTV1
```

The output for successful and failed measures to standard output (and log files) provides more information than just the measure's calculated values. As an example, for a successful and failed `MAX` measure the standard output would be:

```
MAXVAL = 0.999758 at time = 0.000249037
Measure Start Time= 0 Measure End Time= 0.001

Netlist warning: MAXFAIL failed. TO value < FROM value
MAXFAIL = FAILED at time = 0
Measure Start Time= 1 Measure End Time= 0.001
```

In general, information on the measurement window, the time(s) that the measure's value(s) were calculated and a possible cause for a failed measure is output to standard output for all measures except for `FOUR`. This information is similar, but not identical, to HSpice's verbose output. For a failed `FOUR` measure, the standard output will have "FAILED", but there may be less information provided as to why the `FOUR` measure failed.

In this example, the `circuitFileName.mt#` file would have the following output:

```
MAXVAL = 0.999758
MAXFAIL = -1
```

**Xyce** does not support `.DC` or `.AC` measure statements. If they are included in the netlist then **Xyce** will run the netlist and emit warning messages about the unsupported measure statements. **Xyce** does not produce any output for the unsupported `AC` or `DC` measures in either `stdout` or in the `.mt0` file.

## Measurement Windows

There is an implicit precedence when multiple qualifiers are specified to limit the measurement window for a given `.MEASURE` statement. In general, **Xyce** first considers the time-window criteria of the `FROM`, `TO` and `TD` qualifiers. If the simulation time is within that user-specified time-window then the `RISE`, `FALL`, `CROSS` are qualifiers are counted and/or the `TRIG`, `TARG` and `WHEN` qualifiers are evaluated.

The following netlist excerpt shows simple examples where the `.MEASURE` statement may return the default value. For `riseSine`, this may occur because `V(1)` never has an output value of 1.0

because of the time steps chosen by **Xyce**. So, careful selection of the threshold values in WHEN, TRIG and TARG clauses may be needed in some cases. For `fallPulseFracMax`, the simulation interval is too short and the `TARG` value of 0.3 for `V(2)` is not reached within the specified one-second simulation time. For `maxSine`, the `FROM`, `TO` and `TD` values yield an empty time interval, which is typically an error in netlist entry.

```
VS  1  0  SIN(0 1.0 0.5 0 0)
VP  2  0  PULSE( 0 10 0.2 0.2 0.2 0.5 2)
R1  1  0  100K
R2  2  0  100K
.TRAN 0  1
.PRINT TRAN FORMAT=NOINDEX V(1) V(2)
.MEASURE TRAN riseSine TRIG V(1)=0 TARG V(1)=1.0
.MEASURE TRAN fallPulseFracMax TRIG V(2) FRAC_MAX=0.97
+ TARG V(2) FRAC_MAX=0.03
.MEASURE TRAN maxSine MAX V(1) FROM=0.2 TO=0.25 TD=0.5
```

The intent in **Xyce** is for the measurement window to be the intersection of the `FROM-TO` and `TD` windows, if both are specified. As noted above, the use of both `FROM-TO` and `TD` windows can lead to an empty measurement window. So, that usage is not recommended.

## Re-Measure

**Xyce** can re-calculate (or re-measure) the values for `.MEASURE` statements using existing **Xyce** output files. This is useful for tuning `.MEASURE` statements to better capture response metrics of a circuit when the underlying simulation runtime is long. To use this functionality, add the command line argument `-remeasure <file>`, where `<file>` is a **Xyce**-generated `.prn`, `.csv` or `.csd` output file.

There are several important limitations with `-remeasure`:

- The data required by the `.MEASURE` statements must have been output in the simulation output file. When using `-remeasure`, **Xyce** does not recalculate the full solution, but uses the data supplied in the output file. Thus, everything a `.MEASURE` statement needs to calculate its results must be in the output file. **Xyce** will not report an error if the needed data is not in the output file.
- Only voltage node values can be used in `.MEASURE` while using `-remeasure`. Lead currents and power values will not be interpreted correctly during a remeasure operation.
- `-remeasure` only works with `.tran` analysis or `.STEP` when used with `.TRAN`.
- `-remeasure` works with `.prn`, `.csv` and `.csd` formatted output data. However, it might only work with `.csv` and `.csd` files generated by **Xyce**.

As an example in using `-remeasure`, consider a netlist called `myCircuit.cir` which had previously been run in **Xyce** and produced the output file `myCircuit.cir.prn`. One could run `-remeasure` with the following command:

```
runxyce -remeasure myCircuit.cir.prn myCircuit.cir
```

## RISE, FALL and CROSS Qualifiers

The RISE, FALL and CROSS qualifiers are supported for more measures types, and in more ways, in **Xyce** than in HSpice. This sections explains those differences and supplies some examples. One key difference is that **Xyce** supports two different "modes" for these qualifiers.

The first mode is "level-crossing", where the RISE, FALL and CROSS counts are incremented each time the measured signal (e.g, V(a)) crosses the user-specified level (termed crossVal here). If we define currentVal and lastVal as the current and previous values of V(a), and riseCount, fallCount and crossCount as the number of rises, falls and crosses that have occurred, then the pseudo-code for this mode is:

```
if ( (currentVal-crossVal >= 0.0) AND (lastVal-crossVal < 0.0) )
{
  riseCount++;
}
else if( (currentVal-crossVal) <= 0.0) AND (lastVal-crossVal > 0.0) )
{
  fallCount++;
}
```

For this mode, the crossCount is then incremented if either the riseCount or the fallCount was incremented. This mode should work identically to HSpice for the DERIV, FIND, FIND-WHEN and TRIG-TARG measures if the RFC_LEVEL qualifier is not specified for the DERIV, FIND or FIND-WHEN measures.

The second mode is termed "absolute". In this mode, **Xyce** attempts to auto-detect whether the measured waveform has started a new rise or fall. However, the crossCount is still evaluated against a fixed crossVal of 0. This mode may be useful for pulse waveforms with sharp rises and falls, where the waveform's maximum (or minimum) level is not exactly known in advance. It may not work well with noisy waveforms. If we define two Boolean variables isRising and isFalling then the pseudo-code for this mode is:

```
if( (currentVal > lastVal) AND !isRising )
{
  isRising= true;
  isFalling = false;
  riseCount++;
}
else if( (currentVal < lastVal) AND !isFalling )
{
  isRising = false;
  isFalling = true;
  fallCount++;
```

```
}
if ( ( (currentVal >= 0.0) AND (lastVal < 0.0) ) OR
     ( (currentVal <= 0.0) AND (lastVal > 0.0) ) )
{
  crossCount++;
}
```

The following table shows which of these two modes are supported for which **Xyce** measures.

Table 2.1: RISE, FALL and CROSS Support in .MEASURE.

| Measure | Level-Crossing | Absolute |
|---|---|---|
| AVG | A fixed crossVal can be set with RFC_LEVEL | Default, if RFC_LEVEL is not set |
| DERIV | The crossVal is either the value of the WHEN clause, or it can be set to a fixed level with RFC_LEVEL | No |
| DUTY | A fixed crossVal can be set with RFC_LEVEL | Default, if RFC_LEVEL is not set |
| FIND-WHEN and WHEN | The crossVal is either the value of the WHEN clause, or it can be set to a fixed level with RFC_LEVEL | No |
| INTEG | A fixed crossVal can be set with RFC_LEVEL | Default, if RFC_LEVEL is not set |
| MAX | A fixed crossVal can be set with RFC_LEVEL | Default, if RFC_LEVEL is not set |
| MIN | A fixed crossVal can be set with RFC_LEVEL | Default, if RFC_LEVEL is not set |
| PP | A fixed crossVal can be set with RFC_LEVEL | Default, if RFC_LEVEL is not set |
| RMS | A fixed crossVal can be set with RFC_LEVEL | Default, if RFC_LEVEL is not set |
| TRIG and TARG | The levels are set separately by the values in the TRIG and TARG clauses | If FRAC_MAX is used |

As simple examples of these two modes for the MAX measure, consider the following netlist:

```
*examples of RFC modes
VPWL1  1  0 PWL(0 0 0.2 0.5 0.4 0 0.6 0.75 0.8 0 1.0 0.75 1.2 0.0)
R1  1  0  100
.TRAN 0 1.2s
.MEASURE TRAN MAX1 MAX V(1) RISE=1
.MEASURE TRAN MAX2 MAX V(1) RISE=1 RFC_LEVEL=0.6
.MEASURE TRAN MAX3 MAX V(1) FALL=1 RFC_LEVEL=0.5
.PRINT TRAN V(1) MAX1 MAX2 MAX3
.END
```

The descriptive output to standard output would then be:

```
MAX1 = 5.000000e-01 at time = 2.000000e-01
Measure Start Time= 0.000000e+00        Measure End Time= 1.200000e+00
Rise 1: Start Time= 1.000000e-10        End Time= 4.000000e-01

MAX2 = 7.500000e-01 at time = 6.000000e-01
Measure Start Time= 0.000000e+00        Measure End Time= 1.200000e+00
Rise 1: Start Time= 5.600000e-01        End Time= 9.500000e-01

MAX3 = 7.500000e-01 at time = 1.000000e+00
Measure Start Time= 0.000000e+00        Measure End Time= 1.200000e+00
Fall 1: Start Time= 6.700000e-01        End Time= 1.060000e+00
```

The `MAX1` measure uses the "absolute" mode, so the first rise begins with the very first time-step. The maximum value in that first rise interval for measure `MAX1` then occurs at time=0.2s. The `MAX2` measure uses the "level-crossing" mode with a user-specified `RFC_LEVEL` of 0.6V. So, the first rise interval for the `MAX2` measure begins at time=0.56s, and the maximum value in that first rise interval occurs at time=0.6s. The `MAX3` measure illustrates an important point. A "fall" is not recorded for the `MAX3` measure at t=0.2 seconds, but a "rise" (and "cross") would be recorded, since the value of `V(1)` is exactly equal to the user-specified `RFC_LEVEL`. So, the first fall interval for measure `MAX3` begins at time=0.67s, when V(1) first passes through the user-specified `RFC_LEVEL` of 0.5V.

## Additional Examples

Pulse width measurements in **Xyce** can be done as follows, based on this netlist excerpt. This may be useful for ensemble runs, where the maximum value of a one-shot pulse is not known in advance. The first syntax uses three measure statements to measure the 50% pulse width, and works with noisy waveforms. The second syntax uses only one measure statement, but may not always work with noisy waveforms.

```
* pulse-width measurement example 1
.measure tran rise50FracMax trig v(1) frac_max=0.5 targ v(1) frac_max=1
.measure tran fall50FracMax trig v(1) frac_max=1 targ v(1) frac_max=0.5
.measure tran 50width EQN{rise50FracMax + fall50FracMax}

* pulse-width measurement example 2
.measure tran 50widthFracMax trig v(1) frac_max=0.50 targ v(1) frac_max=0.50 FALL=1
```

In some cases, the user may wish to print out both the value and time of a `MAX` or `MIN` measure to the `.mt0` file. This can be done for these two measures with the `OUTPUT` keyword as follows:

```
* printing maximum value and time of maximum value to .mt0 file
.TRAN 0 1
V1 1 0 PWL 0 0 0.5 1 1 0
```

```
R1 1 0 1
.MEASURE TRAN MAXVAL MAX V(1)
.MEASURE TRAN TIMEOFMAXVAL V(1) OUTPUT=TIME
```

The output to the `.mt0` file would be:

```
MAXVAL = 1.000000e+00
TIMEOFMAXVAL = 5.000000e-01
```

The descriptive output to standard output would be the same for both measures though. The measure value and measure time are not re-ordered in the descriptive output when `OUTPUT=VALUE` is used for the `MAX` or `MIN` measures.

```
MAXVAL = 1.000000e+00 at time = 5.000000e-01
Measure Start Time= 0.000000e+00        Measure End Time= 1.000000e+00

TIMEOFMAXVAL = 1.000000e+00 at time = 5.000000e-01
Measure Start Time= 0.000000e+00        Measure End Time= 1.000000e+00
```

## Suppresssing Measure Output

If the **Xyce** output is post-processed with other programs, such as Dakota, it may be desirable to only print a subset of the measure values to the `.mt0` file, but to print all of the measure output to standard output. As an example, these `.MEASURE` statements:

```
.TRAN 0  2ms
.measure tran minSineOne  min V(1) print=none
.measure tran minSinTwo   min V(2) print=stdout
.measure tran minSinThree min V(3) print=all
.measure tran sinSinFive  min V(4)
```

would produce the following measure output in the `.mt0` file:

```
MINSINTHREE = -3.851422e-01
MINSINFOUR = -1.998548e+00
```

and the following measure output in standard output:

```
MINSINTWO = -1.188589e+00 at time = 7.400000e-04
Measure Start Time= 0.000000e+00 Measure End Time= 2.000000e-03

MINSINTHREE = -3.851422e-01 at time = 2.400000e-04
Measure Start Time= 0.000000e+00 Measure End Time= 2.000000e-03
```

```
MINSINFOUR = -1.998548e+00 at time = 7.500000e-04
Measure Start Time= 0.000000e+00 Measure End Time= 2.000000e-03
```

### ERROR Measure

This subsection lists some important caveats with the use of the `ERROR` measure.

- The comparison file, specified with the `FILE` qualifier, can be `.prn`, `.csv` and `.csd` formatted output data. However, the `ERROR` measure might only work with `.csv` and `.csd` files generated by **Xyce**.
- The values of the measured waveform are interpolated to the simulation times in the comparison waveform. So, the norm calculation is inherently windowed to the time interval of the comparison waveform.
- The time window constraints (`TO`, `FROM` and `TD` qualifiers) are not supported for the `ERROR` measure. So, as noted above, the effective window for the norm calculation is set by the extent of the comparison waveform.
- The values in the column in the comparison file specified with the INDEPVARCOL qualifier must be monotonically increasing. Otherwise, **Xyce** will not run the simulation.
- The `ERROR` measure currently supports the L1, L2 and INFNORM, with the default being the L2 norm. If anything other than L1, L2 or INFNORM is specified, **Xyce** will quietly default to the L2 norm.

As a final note, the `ERROR` measure can enable the use of **Xyce** simulation output in optimization problems, like device calibration. However, for internal Sandia users, there may be better approaches that leverage the combined capabilities of Sandia's Dakota and **Xyce** software packages.

### Behavior for Unsupported Types

The `.MEASURE` statement is only supported for `.TRAN` analyses and `.STEP` when used with `.TRAN`. So, **Xyce** does not support `.DC` or `.AC` measure statements. If they are included in the netlist then **Xyce** will run the netlist and emit warning messages about the unsupported measure statements. **Xyce** does not produce any output for the unsupported `AC` or `DC` measures in either `stdout` or in the `.mt0` file.

### HSpice Compatibility

There are known incompatibilities between the **Xyce** and HSpice implementation of `.MEASURE`. They include the following:

- Several of the **Xyce** measure types (DUTY, EQN, FREQ, FOUR, ON_TIME, and OFF_TIME) and qualifers (e.g., FRAC_MAX) are not found in HSpice. Several HSpice measures are not supported in **Xyce**.
- The HSpice qualifers of REVERSE and PREVIOUS are not supported in **Xyce**.
- The HSpice .POWER statement, which prints out a table with the AVG, RMS, MIN and MAX measures for each specified signal, is not supported in **Xyce**.
- **Xyce** only supports .MEASURE in .TRAN analysis mode.
- **Xyce** generally supports more qualifiers (FROM, TO, TD, RISE, FALL and CROSS) for the measurement windows for a given measure-type. So, some legal **Xyce** syntaxes may not be legal in HSpice.
- For TRIG and TARG clauses in **Xyce**, the TD qualifier applies to both the TRIG and TARG qualifiers. HSpice allows the specification of separate time-delays for the TRIG and TARG clauses.
- **Xyce** will not return a negative value from a TRIG and TARG measure. The TARG clause is only evaluated if the TRIG clause is satisfied. This behavior is different from HSpice.
- The Xyce EQN measure can calculate an expression based on other measure values. So, one of its usages is similar to the HSpice PARAM measure. However, their syntaxes are different.

Additional syntax differences between TRIG and TARG clauses in **Xyce** and HSpice are as follows. In HSpice, a RISE, FALL or CROSS keyword must be specified in the following measure statement. Those RISE keywords are optional with this particular syntax example in **Xyce**. If they are omitted, then **Xyce** uses a default value of 1.

```
.measure tran riseSine trig v(1)=0.01 RISE=1 targ v(1)=0.99 RISE=1
```

The following HSpice syntax (VAL=0.9) is supported in **Xyce** for TRIG and TARG measures. However, the preferred **Xyce** syntax would use `targ v(1)=0.9` instead.

```
.measure tran riseSine trig v(1) AT=0.0001 targ v(1) VAL=0.9 RISE=1
```

### 2.1.14 .MODEL (Model Definition)

The .MODEL command provides a set of device parameters to be referenced by device instances in the circuit.

**General Form**

```
.MODEL <model name> <model type> (<name>=<value>)*
```

**Examples**

```
.MODEL RMOD R (RSH=1)
.MODEL MOD1 NPN BF=50 VAF=50 IS=1.E-12 RB=100 CJC=.5PF TF=.6NS
.MODEL NFET NMOS(LEVEL=1 KP=0.5M VTO=2V)
```

**Arguments and Options**

`model name`
: The model name used to reference the model.

`model type`
: The model type used to define the model. This determines if the model is (for example) a resistor, or a MOSFET, or a diode, etc. For transistors, there will usually be more than one type possible, such as NPN and PNP for BJTs, and NMOS and PMOS for MOSFETs.

`name`
`value`
: The name of a parameter and its value. Most models will have a list of parameters available for specification. Those which are not set will receive default values. Most will be floating point numbers, but some can be integers and some can be strings, depending on the definition of the model.

#### LEVEL Parameter

A common parameter is the LEVEL parameter, which is set to an integer value. This parameter will define exactly which model of the given type is to be used. For example, there are many different available MOSFET models. All of them will be specified using the same possible names and types. The way to differentiate (for example) between the BSIM3 model and the PSP model is by setting the appropriate LEVEL.

#### Model Interpolation

Traditionally, SPICE simulators handle thermal effects by coding temperature dependence of model parameters into each device. These expressions modify the nominal device parameters given in the .MODEL card when the ambient temperature is not equal to TNOM, the temperature at which parameters were extracted.

These temperature correction equations may be reasonable at temperatures close to TNOM, but Sandia users of **Xyce** have found them inadequate when simulations must be performed over

a wide range of temperatures. To address this inadequacy, **Xyce** implements a model interpolation option that allows the user to specify multiple `.MODEL` cards, each extracted from real device measurements at a different **TNOM**. From these model cards, **Xyce** will interpolate parameters based on the ambient temperature using either piecewise linear or quadratic interpolation.

Interpolation of models is accessed through the model parameter **TEMPMODEL** in the models that support this capability. In the netlist, a base model is specified, and is followed by multiple models at other temperatures.

Interpolation of model cards in this fashion is implemented in the BJT level 1, JFET, MESFET, and MOSFETS levels 1-6, 10, and 18.

The use of model interpolation is best shown by example:

```
Jtest 1a 2a 3 SA2108 TEMP= 40
*
.MODEL SA2108 PJF ( TEMPMODEL=QUADRATIC TNOM = 27
+ LEVEL=2 BETA= 0.003130 VTO = -1.9966 PB = 1.046
+ LAMBDA = 0.00401 DELTA = 0.578; THETA = 0;
+ IS = 1.393E-10          RS = 1e-3)
*
.MODEL SA2108 PJF ( TEMPMODEL=QUADRATIC TNOM = -55
+ LEVEL=2 BETA = 0.00365 VTO = -1.9360 PB = 0.304
+ LAMBDA = 0.00286 DELTA = 0.2540 THETA = 0.0
+ IS = 1.393E-10 RD = 0.0 RS = 1e-3)
*
.MODEL SA2108 PJF ( TEMPMODEL=QUADRATIC TNOM = 90
+ LEVEL=2 BETA = 0.002770 VTO = -2.0350 PB = 1.507
+ LAMBDA = 0.00528 DELTA = 0.630 THETA = 0.0
+ IS = 1.393E-10          RS = 5.66)
```

Note that the model names are all identical for the three `.MODEL` lines, and that they all specify `TEMPMODEL=QUADRATIC`, but with different **TNOM**. For parameters that appear in all three `.MODEL` lines, the value of the parameter will be interpolated using the `TEMP=` value in the device line, which in this example is 40°C, in the first line. For parameters that are not interpolated, such as **RD**, it is not necessary to include these in the second and third `.MODEL` lines.

The only valid arguments for **TEMPMODEL** are **QUADRATIC** and **PWL** (piecewise linear). The quadratic method includes a limiting feature that prevents the parameter value from exceeding the range of values specified in the `.MODEL` lines. For example, the **RS** value in the example would take on negative values for most of the interval between -55 and 27, as the value at 90 is very high. This truncation is necessary as parameters can easily take on values (such as the negative resistance of **RS** in this example) that will cause a **Xyce** failure.

With the BJT parameters **IS** and **ISE**, interpolation is done not on the parameter itself, but on the the log of the parameter, which provides for excellent interpolation of these parameters that vary over many orders of magnitude, and with this type of temperature dependence.

The interpolation scheme used for model interpolation bases the interpolation on the difference between the ambient temperature and the **TNOM** value of the first model card in the netlist, which can sometimes lead to poorly conditioned interpolation. Thus it is often best that the first model card in the netlist be the one that has the “middle” **TNOM**, as in the example above. This ensures that no matter where in the range of temperature values the ambient temperature lies, it is a minimal distance from the base point of the interpolation.

### 2.1.15 .NODESET (Approximate Initial Condition, Bias point)

The .NODESET command sets initial conditions for operating point calculations. It is similar to .IC (Section 2.1.10), except it is applied as an initial guess, rather than as a firmly enforced condition. Like .IC, .NODESET initial conditions can be specified for some or all of the circuit nodes.

Consult the **Xyce** User's Guide for more guidance.

**General Form**

```
.NODESET < V(<node>)=<value>
.NODESET <node> <value>
```

---

**Examples**

```
.NODESET V(2)=3.1
.NODESET 2 3.1
```

---

**Comments**

The **Xyce** .NODESET command uses a different strategy than either SPICE or HSpice. When .NODESET is specified, **Xyce** does two solves for the DC operating point. One with the .NODESET values held as initial conditions (i.e., the same as if it was an .IC solve). The second solve is then done without any conditions imposed, but with the first solution as an initial guess.

The .NODESET capability can only set voltage values, not current values.

The .NODESET capability can not be used, within subcircuits, to set voltage values on global nodes.

### 2.1.16 .NOISE (Noise Analysis)

Calculates the the small signal noise response of a circuit over a range of frequencies. The .NOISE command can specify a linear sweep, decade logarithmic sweep, or octave logarithmic sweep.

**General Form**

```
.NOISE V(OUTPUT <, REF>) SRC <sweep type> <points value>
+ <start frequency value> <end frequency value>
```

**Examples**

```
.NOISE V(5) VIN LIN 101 100Hz 200Hz
.NOISE V(5,3) V1 OCT 10 1kHz 16kHz
.NOISE V(4) V2 DEC 20 1MEG 100MEG
```

**Arguments and Options**

`V(OUTPUT <,REF>)`
: The node at which the total output noise is desired. If REF is specified, then the noise voltage V(OUTPUT) - V(REF) is calculated. By default, REF is assumed to be ground.

`SRC` The name of an independent source to which input noise is referred.

`sweep type`
: Must be `LIN`, `OCT`, or `DEC`, as described below.

  `LIN` Linear sweep
  : The sweep variable is swept linearly from the starting to the ending value.

  `OCT` Sweep by octaves
  : The sweep variable is swept logarithmically by octaves.

  `DEC` Sweep by decades
  : The sweep variable is swept logarithmically by decades.

`points value`
: Specifies the number of points in the sweep, using an integer.

`start frequency value`
`end frequency value`
: The end frequency value must not be less than the start frequency value, and both must be greater than zero. The whole sweep must include at least one point.

**Comments**

Noise analysis is a linear analysis. The simulator calculates the noise response by linearizing the circuit around the bias point.

A `.PRINT NOISE` must be used to get the results of the NOISE sweep analysis. See Section 2.1.23.

Noise analysis is a relatively new feature to **Xyce**, so not all noise models have been supported.

### 2.1.17 .OP (Bias Point Analysis)

The .OP command causes detailed information about the bias point to be printed.

**General Form** `.OP`

---

**Comments** This type of analysis can be specified by itself, in which case **Xyce** will run a nominal operating point. However, if specified with another analysis type, no additional operating point will be calculated, as most analyses require a DC operating point for initialization.

`.OP` outputs the parameters for all the device models and all the device instances present in the circuit. For large circuits, this can be a very large amount of output, so use with caution.

If no analysis command is provided, `.OP` will run a DC Operating Point calculation (i.e., a DC analysis) with all the voltage sources left at their nominal (instance line) values.

The **Xyce** `.OP` statement may provide less, or different, output than other simulators. For some of the missing quantities, a **Xyce** `.PRINT` line can give similar information. Nodal voltages are always available on a `.PRINT` line. Device currents for many devices are available on a `.PRINT` line using the lead current notation `(I(devicename))`. Similarly, device power is available on a `.PRINT` line via `P(devicename)` or `W(devicename)`. However, these capabilities are not supported in all devices. Table 2.24 shows which devices support these lead current and power notations. Currently, there is no way to print out internal capacitances.

### 2.1.18 .OPTIONS Statements

Set various simulation limits, analysis control parameters and output parameters. In general, they use the following format:

**General Form** `.OPTIONS <pkg> [<name>=<value>]*`

---

**Examples** `.OPTIONS TIMEINT ABSTOL=1E-8`

---

**Arguments and Options**

| | | |
|---|---|---|
| `pkg` | `DEVICE` | Device Model |
| | `TIMEINT` | Time Integration |
| | `NONLIN` | Nonlinear Solver |
| | `NONLIN-TRAN` | Transient Nonlinear Solver |
| | `NONLIN-HB` | HB Nonlinear Solver |
| | `LOCA` | Continuation/Bifurcation Tracking |
| | `LINSOL` | Linear Solver |
| | `LINSOL-HB` | HB Linear Solver |
| | `OUTPUT` | Output |
| | `RESTART` | Restart |
| | `SENSITIVITY` | Direct and Adjoint sensitivities |
| | `HBINT` | Harmonic Balance (HB) |

`name`
`value`
The name of the parameter and the value it will be assigned.

---

**Comments** Exceptions to this format are the `OUTPUT` and `RESTART` options, which use their own format. They are defined under their respective descriptions.

The designator `pkg` refers loosely to a *module* in the code. Thus, the term is used here as identifying a specific module to be controlled via *options* set in the netlist input file.

#### .OPTIONS DEVICE (Device Package Options)

The device package parameters listed in Table 2.2 outline the options available for specifying device specific parameters. Some of these (`DEFAS, DEFAD, TNOM` etc.) have the same meaning as they do for the `.OPTION` line from Berkeley SPICE (3f5). Parameters which apply globally to all device models will be specified here. Parameters specific to a particular device instance or model are specified in section 2.3.

Table 2.2: Options for Device Package

| Option | Description | Default |
|---|---|---|
| DEFAD | MOS Drain Diffusion Area | 0.0 |
| DEFAS | MOS Source Diffusion Area | 0.0 |
| DEFL | MOS Default Channel Length | 1.0E-4 |
| DEFW | MOS Default Channel Width | 1.0E-4 |
| DIGINITSTATE | This option controls the behavior of the Digital Latch (DLTCH), D Flip-Flop (DFF), JK Flip-Flop (JKFF) and T Flip-Flop (TFF) behavioral digital devices during the DC Operating Point (DCOP) calculations. See 2.3.25 for more details. | 3 |
| GMIN | Minimum Conductance | 1.0E-12 |
| MINRES | This is a minimum resistance to be used in place of the default zero value of semiconductor device internal resistances. It is only used when model specifications (.MODEL cards) leave the parameter at its default value of zero, and is not used if the model explicitly sets the resistance to zero. | 0.0 |
| MINCAP | This is a minimum capacitance to be used in place of the default zero value of semiconductor device internal capacitances. It is only used when model specifications (.MODEL cards) leave the parameter at its default value of zero, and is not used if the model explicitly sets the capacitance to zero. | 0.0 |
| TEMP | Temperature | 27.0 °C (300.15K) |
| TNOM | Nominal Temperature | 27.0 °C (300.15K) |
| NUMJAC | Numerical Jacobian flag (only use for small problems) | 0 (FALSE) |
| VOLTLIM | Voltage limiting | 1 (TRUE) |
| icFac | This is a multiplicative factor which is applied to right-hand side vector loads of .IC initial conditions during the DCOP phase. | 10000.0 |
| LAMBERTW | This flag determines if the Lambert-W function should be applied in place of exponentials in hard-to-solve devices. This capability is implemented in the diode and BJT. Try this for BJT circuits that have convergence problems. For best effect, this option should be tried with voltlim turned off. A detailed explanation of the Lambert-W function, and its application to device modeling can be found in reference [5]. | 0 (FALSE) |
| MAXTIMESTEP | Maximum time step size | 1.0E+99 |

***MOSFET Homtopy parameters***

Table 2.2: Options for Device Package

| Option | Description | Default |
|---|---|---|
| VDSSCALEMIN | Scaling factor for Vds | 0.3 |
| VGSTCONST | Initial value for Vgst | 4.5 Volt |
| LENGTH0 | Initial value for length | 5.0e-6 |
| WIDTH0 | Initial value for width | 200.0e-6 |
| TOX0 | Initial value for oxide thickness | 6.0e-8 |
| ***Debug output parameters*** | | |
| DEBUGLEVEL | The higher this number, the more info is output | 1 |
| DEBUGMINTIMESTEP | First time-step debug information is output | 0 |
| DEBUGMAXTIMESTEP | Last time-step of debug output | 65536 |
| DEBUGMINTIME | Same as DEBUGMINTIMESTEP except controlled by time (sec.) instead of step number | 0.0 |
| DEBUGMAXTIME | Same as DEBUGMAXTIMESTEP except controlled by time (sec.) instead of step number | 100.0 |

## .OPTIONS TIMEINT (Time Integration Options)

The time integration parameters listed in Table 2.3 give the available options for helping control the time integration algorithms for transient analysis.

Time integration options are set using the .OPTIONS TIMEINT command.

Table 2.3: Options for Time Integration Package.

| Option | Description | Default |
|---|---|---|
| METHOD | Time integration method. This parameter is only relevant when running **Xyce** in transient mode. Supported methods:<br>■ bdf or 6 (Backward Difference Formula orders 1-5)<br>■ trap or 7 (variable order Trapezoid)<br>■ gear or 8 (Gear method) | trap or 7 (variable order Trapezoid) |
| RELTOL | Relative error tolerance | 1.0E-03 |
| ABSTOL | Absolute error tolerance | 1.0E-06 |
| RESTARTSTEPSCALE | This parameter is a scalar which determines how small the initial time step out of a breakpoint should be. In the current version of the time integrator, the first step after a breakpoint isn't subjected to much error analysis, so for very stiff circuits, this step can be problematic. | 0.005 |

Table 2.3: Options for Time Integration Package.

| Option | Description | Default |
|---|---|---|
| `NLNEARCONV` | This flag sets if “soft” failures of the nonlinear solver, when the convergence criteria are almost, but not quite, met, should result in a ”success” code being returned from the nonlinear solver to the time integrator. If this is enabled, it is expected that the error analysis performed by the time integrator will be the sole determination of whether or not the time step is considered a “pass” or a “fail”. This is on by default, but occasionally circuits need tighter convergence criteria. | 0 (FALSE) |
| `NLSMALLUPDATE` | This flag is another “soft” nonlinear solver failure flag. In this case, if the flag is set, time steps in which the nonlinear solver stalls, and is using updates that are numerically tiny, can be considered to have converged by the nonlinear solver. If this flag is set, the time integrator is responsible for determining if a step should be accepted or not. | 1 (TRUE) |
| `RESETTRANNLS` | The nonlinear solver resets its settings for the transient part of the run to something more efficient (basically a simpler set of options with smaller numbers for things like max Newton step). If this is set to false, this resetting is turned off. Normally should be left as default. | 1 (TRUE) |
| `MAXORD` | This parameter determines the maximum order of integration that time integrators will attempt. For BDF 1-5, this can be reduced down to 1 to use Backward Euler. Setting this option does not guarrantee that the integrator will integrate at this order, it just sets the maximum order the integrator will attempt. In order to guarantee a particular order is used, see the option `MINORD` below. | 5 for BDF 1-5, 2 for variable order Trapezoid and Gear |
| `MINORD` | This parameter determines the minimum order of integration that time integrators will attempt to maintain. The integrator will start at Backward Euler and move up in order as quickly as possible to achive `MINORD` and then it will keep the order above this. If `MINORD` is set at 2 and `MAXORD` is set at 2, then the integrator will move to second order as quickly as possible and stay there. | 1 |

Table 2.3: Options for Time Integration Package.

| Option | Description | Default |
|---|---|---|
| NEWLTE | This parameter determines the reference value for relative convergence criterion in the local truncation error based time step control. The supported choices<br>■ 0. The reference value is the current value on each node.<br>■ 1. The reference value is the maximum of all the signals at the current time.<br>■ 2. The reference value is the maximum of all the signals over all past time.<br>■ 3. The reference value is the maximum value on each signal over all past time. | 1 |
| NEWBPSTEPPING | This flag sets a new time stepping method after a break point. Previously, **Xyce** treats each breakpoint identically to the DCOP point, in which the intitial time step out of the DCOP is made to be very very small, because the LTE calculation is unreliable. As a result, **Xyce** takes an incredibly small step out of each breakpoint and then tries to grow the stepsize from there. When NEWBPSTEPPING is set, **Xyce** can take a reasonable large step out of every non-DCOP breakpoint, and then just relies on the step control to ensure that the step is small enough.<br>Note that the new time stepping method after a break point does not work well with the old LTE calculation since the old LTE calculation is conservative and it tends to reject the first time step out of a break point. We recommend to use newlte if you choose to use the new time stepping method out of a break point. When using BDF15 method, newbpstepping should be disabled since no new time stepping strategy is implemented for BDF15 method. | 1 (TRUE) |
| MASKIVARS | This parameter masks out current variables in the local truncation error (LTE) based time step control. | 0 (FALSE) |

Table 2.3: Options for Time Integration Package.

| Option | Description | Default |
|---|---|---|
| ERROPTION | This parameter determines if Local Truncation Error (LTE) control is turned on or not. If ERROPTION is on, then step-size selection is based on the number of Newton iterations nonlinear solve. For BDF15, if the nonlinear solve succeeds, then the step is doubled, otherwise it is cut by one eighth. For Trapezoid and Gear, if the number of nonlinear iterations is below NLMIN then the step is doubled. If the number of nonlinear iterations is above NLMAX then the step is cut by one eighth. In between, the step-size is left alone. Because this option can lead to very large time-steps, it is very important to specify an appropriate DELMAX option. If the circuit has breakpoints, then the option MINTIMESTEPSBP can also help to adjust the maximum time-step by specifying the minimum number of time points between breakpoints. | 0 (Local Truncation Error is used) |
| NLMIN | This parameter determines the lower bound for the desired number of nonlinear iterations during a Trapezoid time or Gear integration solve with ERROPTION=1. | 3 |
| NLMAX | This parameter determines the upper bound for the desired number of nonlinear iterations during a Trapezoid time or Gear integration solve with ERROPTION=1. | 8 |
| DELMAX | This parameter determines the maximum time step-size used with ERROPTION=1. If a maximum time-step is also specified on the .TRAN line, then the minimum of that value and DELMAX is used. | 1e99 |
| MINTIMESTEPSBP | This parameter determines the minimum number of time-steps to use between breakpoints. This enforces a maximum time-step between breakpoints equal to the distance between the last breakpoint and the next breakpoint divided by MINTIMESTEPSBP. | 10 |
| TIMESTEPSREVERSAL | This parameter determines whether time-steps are rejected based upon the step-size selection strategy in ERROPTION=1. If it is set to 0, then a step will be accepted with successful nonlinear solves independent of whether the number of nonlinear iterations is between NLMIN and NLMAX. If it is set to 1, then when the number of nonlinear iterations is above NLMAX, the step will be rejected and the step-size cut by one eighth and retried. If ERROPTION=0 (use LTE) then TIMESTEPSREVERSAL=1 (reject steps) is set. This has the consequence that for the BDF15 integrator, TIMESTEPREVERSAL=1. | 0 (do not reject steps) |

Table 2.3: Options for Time Integration Package.

| Option | Description | Default |
|---|---|---|
| DOUBLEDCOPSTEP | TCAD devices by default will solve an extra "setup" problem to mitigate some of the convergence problems that TCAD devices often exhibit. This extra setup problem solves a nonlinear Poisson equation first to establish an initial guess for the full drift-diffusion(DD) problem. The name of this parameter refers to the fact that the code is solving two DC operating point steps instead of one. To solve only the nonlinear Poisson problem, then set DOUBLEDCOP=nl_poisson. To solve only the drift-diffusion problem (skipping the nonlinear Poisson), set DOUBLEDCOP=drift_diffusion. To explicitly set the default behavior, then set DOUBLEDCOP=nl_poisson, drift_diffusion. | Default value, for TCAD circuits, is a combination: nl_poisson, drift_diffusion. Default value, for non-TCAD circuits is a moot point. If no TCAD devices are present in the circuit, then there will not be an extra DCOP solve. |
| BPENABLE | Flag for turning on/off breakpoints (1 = ON, 0 = OFF). It is unlikely anyone would ever set this to FALSE, except to help debug the breakpoint capability. | 1 (TRUE) |
| EXITTIME | If this is set to nonzero, the code will check the simulation time at the end of each step. If the total time exceeds the exittime, the code will ungracefully exit. This is a debugging option, the point of which is the have the code stop at a certain time during a run without affecting the step size control. If not set by the user, it isn't activated. | - |
| EXITSTEP | Same as EXITTIME, only applied to step number. The code will exit at the specified step. If not set by the user, it isn't activated. | - |

## .OPTIONS HBINT (Harmonic Balance Options)

The Harmonic Balance parameters listed in Table 2.4 give the available options for helping control the algorithm for harmonic balance analysis.

Harmonic Balance options are set using the .OPTIONS HBINT command.

Table 2.4: Options for HB.

| Option | Description | Default |
|---|---|---|
| NUMFREQ | Number of harmonics to be calculated for each tone. It must have the same number of entries as .HB statement | 10 |
| STARTUPPERIODS | Number of periods to integrate through before calculating the initial conditions. This option is only used when TAHB=1. | 0 |
| SAVEICDATA | Write out the initial conditions to a file. | 0 |
| TAHB | This flag sets transient assisted HB. When TAHB=0, transient analysis is not performed to get an initial guess. When TAHB=1, it uses transient analysis to get an initial guess. For multi-tone HB simulation, the initial guess is generated by a single tone transient simulation. The first tone following .HB is used to determine the period for the transient simulation. For multi-tone HB simulation, it should be set to the frequency that produces the most nonlinear response by the circuit. | 1 |
| VOLTLIM | This flag sets voltage limiting for HB. During the initial guess calculation, which normally uses transient simulation, the voltage limiting flag is determined by .options device voltlim. During the HB phase, the voltage limiting flag is determined by .options hbint voltlim. | 1 |
| INTMODMAX | The maximum intermodulation product order used in the spectrum. | the largest value in the NUMFREQ list. |
| NUMTPTS | Number of time points in the output | The total number of frequencies (positive, negative and DC). |

### .OPTIONS NONLIN (Nonlinear Solver Options)

The nonlinear solver parameters listed in Table 2.5 provide methods for controlling the nonlinear solver for DC, transient and harmonic balance. Note that the nonlinear solver options for DCOP, transient and harmonic balance are specified in separate options statements, using .OPTIONS NONLIN, .OPTIONS NONLIN-TRAN and .OPTIONS NONLIN-HB, respectively. The defaults for .OPTIONS NONLIN and .OPTIONS NONLIN-TRAN are specified in the third and fourth columns of Table 2.5. The defaults for .OPTIONS NONLIN-HB are the same as the default settings given for NONLIN-TRAN with two exceptions. For NONLIN-HB, the default for ABSTOL is 1e-9 and the default for RHSTOL is 1e-4.

Table 2.5: Options for Nonlinear Solver Package.

| Option | Description | NONLIN Default | NONLIN-TRAN Default |
|---|---|---|---|
| NOX | Use NOX nonlinear solver. | 1 (TRUE) | 0 (FALSE) |
| NLSTRATEGY | Nonlinear solution strategy. Supported Strategies:<br>■ 0 (Newton)<br>■ 1 (Gradient)<br>■ 2 (Trust Region) | 0 (Newton) | 0 (Newton) |
| SEARCHMETHOD | Line-search method used by the nonlinear solver. Supported line-search methods:<br>■ 0 (Full Newton - no line search)<br>■ 1 (Interval Halving)<br>■ 2 (Quadratic Interpolation)<br>■ 3 (Cubic Interpolation)<br>■ 4 (More'-Thuente) | 0 (Full Newton) | 0 (Full Newton) |
| CONTINUATION | Enables the use of Homotopy/Continuation algorithms for the nonlinear solve. Options are:<br>■ 0 (Standard nonlinear solve)<br>■ 1 (Natural parameter homotopy. See LOCA options list)<br>■ 2/mos (Specialized dual parameter homotopy for MOSFET circuits)<br>■ 3/gmin (GMIN stepping, similar to that of SPICE) | 0 (Standard nonlinear solve) | 0 (Standard nonlinear solve) |
| ABSTOL | Absolute residual vector tolerance | 1.0E-12 | 1.0E-06 |
| RELTOL | Relative residual vector tolerance | 1.0E-03 | 1.0E-02 |
| DELTAXTOL | Weighted nonlinear-solution update norm convergence tolerance | 1.0 | 0.33 |
| RHSTOL | Residual convergence tolerance (unweighted 2-norm) | 1.0E-06 | 1.0E-02 |
| SMALLUPDATETOL | Minimum acceptable norm for weighted nonlinear-solution update | 1.0E-06 | 1.0E-06 |
| MAXSTEP | Maximum number of Newton steps | 200 | 20 |
| MAXSEARCHSTEP | Maximum number of line-search steps | 2 | 2 |
| NORMLVL | Norm level used by the nonlinear solver algorithms *(NOTE: not used for convergence tests)* | 2 | 2 |
| IN_FORCING | Inexact Newton-Krylov forcing flag | 0 (FALSE) | 0 (FALSE) |

Table 2.5: Options for Nonlinear Solver Package.

| Option | Description | NONLIN Default | NONLIN-TRAN Default |
|---|---|---|---|
| AZ_TOL | Sets the minimum allowed linear solver tolerance. Valid only if IN_FORCING=1. | 1.0E-12 | 1.0E-12 |
| RECOVERYSTEPTYPE | If using a line search, this option determines the type of step to take if the line search fails. Supported strategies:<br>■ 0 (Take the last computed step size in the line search algorithm)<br>■ 1 (Take a constant step size set by RECOVERYSTEP) | 0 | 0 |
| RECOVERYSTEP | Value of the recovery step if a constant step length is selected | 1.0 | 1.0 |
| DLSDEBUG | Debug output for direct linear solver | 0 (FALSE) | 0 (FALSE) |
| DEBUGLEVEL | The higher this number, the more info is output | 1 | 1 |
| DEBUGMINTIMESTEP | First time-step debug information is output | 0 | 0 |
| DEBUGMAXTIMESTEP | Last time-step of debug output | 99999999 | 99999999 |
| DEBUGMINTIME | Same as DEBUGMINTIMESTEP except controlled by time (sec.) instead of step number | 0.0 | 0.0 |
| DEBUGMAXTIME | Same as DEBUGMAXTIMESTEP except controlled by time (sec.) instead of step number | 1.0E+99 | 1.0E+99 |
| ***Parameters not supported by NOX*** | | | |
| LINOPT | Linear optimization flag | 0 (FALSE) | 0 (FALSE) |
| CONSTRAINTBT | Constraint backtracking flag | 0 (FALSE) | 0 (FALSE) |
| CONSTRAINTMAX | Global maximum setting for constraint backtracking | DBL_MAX (Machine Dependent Constant) | DBL_MAX |
| CONSTRAINTMIN | Global minimum setting for constraint backtracking | -DBL_MAX (Machine Dependent Constant) | -DBL_MAX |
| CONSTRAINTCHANGE | Global percentage-change setting for constraint backtracking | sqrt(DBL_MAX) (Machine Dependent Constant) | sqrt(DBL_MAX) |

## .OPTIONS LOCA (Continuation and Bifurcation Tracking Package Options)

The continuation selections listed in Table 2.6 provide methods for controlling continuation and bifurcation analysis. These override the defaults and any that were set simply in the continuation package. This option block is only used if the nonlinear solver or transient nonlinear solver enable continuation through the CONTINUATION flag.

There are two specialized homotopy methods that can be set in the nonlinear solver options line. One is MOSFET-based homotopy, which is specific to MOSFET circuits. This is specified using `continuation=2` or `continuation=mos`. The other is GMIN stepping, which is specified using `continuation=3` or `continuation=gmin`. For either of these methods, while it is possible to modify their default LOCA options, it is generally not necessary to do so. Note that **Xyce** automatically attempts GMIN stepping if the inital attempt to find the DC operating point fails. If GMIN stepping is specified in the netlist, **Xyce** will not attempt to find a DC operating point without GMIN stepping.

LOCA options are set using the `.OPTIONS LOCA` command.

Table 2.6: Options for Continuation and Bifurcation Tracking Package.

| Option | Description | Default |
|---|---|---|
| `STEPPER` | Stepping algorithm to use:<br>■ 0 (Natural or Zero order continuation)<br>■ 1 (Arc-length continuation) | 0 (Natural) |
| `PREDICTOR` | Predictor algorithm to use:<br>■ 0 (Tangent)<br>■ 1 (Secant)<br>■ 2 (Random)<br>■ 3 (Constant) | 0 (Tangent) |
| `STEPCONTROL` | Algorithm used to adjust the step size between continuation steps:<br>■ 0 (Constant)<br>■ 1 (Adaptive) | 0 (Constant) |
| `CONPARAM` | Parameter in which to step during a continuation run | VA:V0 |
| `INITIALVALUE` | Starting value of the continuation parameter | 0.0 |
| `MINVALUE` | Minimum value of the continuation parameter | -1.0E20 |
| `MAXVALUE` | Maximum value of the continuation parameter | 1.0E20 |
| `BIFPARAM` | Parameter to compute during bifurcation tracking runs | VA:V0 |
| `MAXSTEPS` | Maximum number of continuation steps (includes failed steps) | 20 |
| `MAXNLITERS` | Maximum number of nonlinear iterations allowed (set this parameter equal to the `MAXSTEP` parameter in the `NONLIN` option block | 20 |
| `INITIALSTEPSIZE` | Starting value of the step size | 1.0 |
| `MINSTEPSIZE` | Minimum value of the step size | 1.0E20 |
| `MAXSTEPSIZE` | Maximum value of the step size | 1.0E-4 |

Table 2.6: Options for Continuation and Bifurcation Tracking Package.

| Option | Description | Default |
|---|---|---|
| AGGRESSIVENESS | Value between 0.0 and 1.0 that determines how aggressive the step size control algorithm should be when increasing the step size. 0.0 is a constant step size while 1.0 is the most aggressive. | 0.0 |
| RESIDUALCONDUCTANCE | If set to a nonzero (small) number, this parameter will force the GMIN stepping algorithm to stop and declare victory once the artificial resistors have a conductance that is smaller than this number. This should only be used in transient simulations, and *ONLY* if it is absolutely necessary to get past the DC operating point calculation. It is almost always better to fix the circuit so that residual conductance is not necessary. | 0.0 |

## .OPTIONS LINSOL (Linear Solver Options)

**Xyce** uses both sparse direct solvers as well as Krylov iterative methods for the solution of the linear equations generated by Newton's method. For the advanced users, there are a variety of options that can be set to help improve these solvers. Transformations of the linear system have a "TR_" prefix on the flag. Many of the options for the Krylov solvers are simply passed through to the underlying Trilinos/AztecOO solution settings and thus have an "AZ_" prefix on the flag.

Linear solver options are set using the .OPTIONS LINSOL command.

Table 2.7: Options for Linear Solver Package.

| Option | Description | Default |
|---|---|---|
| TYPE | Determines which linear solver will be used.<br>■ KLU<br>■ KSparse<br>■ SuperLU (optional)<br>■ AztecOO<br>■ Belos<br>■ ShyLU (optional)<br>Note that while KLU, KSparse, and SuperLU (optional) are available for parallel execution they will solve the linear system in serial. Therefore they will be useful for moderate problem sizes but will not scale in memory or performance for large problems | KLU (Serial)<br>AztecOO (Parallel) |
| TR_partition | Perform load-balance partitioning on the linear system | 0 (NONE, Serial)<br>1 (Isorropia, Parallel) |

Table 2.7: Options for Linear Solver Package.

| Option | Description | Default |
|---|---|---|
| TR_partition_type | Type of load-balance partitioning on the linear system | "GRAPH" |
| TR_singleton_filter | Triggers use of singleton filter for linear system | 0 (FALSE, Serial) 1 (TRUE, Parallel) |
| TR_amd | Triggers use of approximate minimum-degree (AMD) ordering for linear system | 0 (FALSE, Serial) 1 (TRUE, Parallel) |
| TR_global_btf | Triggers use of block triangular form (BTF) ordering for linear system, requires TR_amd=0 and TR_partition=0 | 0 (FALSE) |
| TR_reindex | Reindexes linear system parallel global indices in lexigraphical order, recommended with singleton filter | 1 (TRUE) |
| TR_solvermap | Triggers remapping of column indices for parallel runs, recommended with singleton filter | 1 (TRUE) |
| ***Iterative linear solver parameters*** | | |
| adaptive_solve | Triggers use of AztecOO adaptive solve algorithm for preconditioning of iterative linear solves | 0 (FALSE) |
| use_aztec_precond | Triggers use of native AztecOO preconditioners for the iterative linear solves | 0 (FALSE) |
| AZ_max_iter | Maximum number of iterative solver iterations | 500 |
| AZ_precond | AztecOO iterative solver preconditioner flag (used only when use_aztec_precond=1) | AZ_dom_decomp (14) |
| AZ_solver | Iterative solver type | AZ_gmres (1) |
| AZ_conv | Convergence type | AZ_r0 (0) |
| AZ_pre_calc | Type of precalculation | AZ_recalc (1) |
| AZ_keep_info | Retain calculation info | AZ_true (1) |
| AZ_orthog | Type of orthogonalization | AZ_modified (1) |
| AZ_subdomain_solve | Subdomain solution for domain decomposition preconditioners | AZ_ilut (9) |
| AZ_ilut_fill | Approximate allowed fill-in factor for the ILUT preconditioner | 2.0 |
| AZ_drop | Specifies drop tolerance used in conjunction with LU or ILUT preconditioners | 1.0E-03 |
| AZ_reorder | Reordering type | AZ_none (0) |
| AZ_scaling | Type of scaling | AZ_none (0) |

Table 2.7: Options for Linear Solver Package.

| Option | Description | Default |
|---|---|---|
| AZ_kspace | Maximum size of Krylov subspace | 500 |
| AZ_tol | Convergence tolerance | 1.0E-12 |
| AZ_output | Output level | AZ_none (0)<br>50 (if verbose build) |
| AZ_diagnostics | Diagnostic information level | AZ_none (0) |
| AZ_overlap | Schwarz overlap level for ILU preconditioners | 0 |
| AZ_rthresh | Diagonal shifting relative threshold for ILU preconditioners | 1.0001 |
| AZ_athresh | Diagonal shifting absolute threshold for ILU preconditioners | 1.0E-04 |
| ShyLU_rthresh | Relative dropping threshold for Schur complement preconditioner (ShyLU only) | 1.0E-03 |

### .OPTIONS LINSOL-HB (Linear Solver Options)

For harmonic balance (HB) analysis, only Krylov iterative methods are available for the solution of the steady state. Furthermore, only matrix-free techniques are available for preconditioning the HB Jacobian, so many of the standard linear solver options are not available. The linear solver options for HB are set using the .OPTIONS LINSOL-HB command.

Table 2.8: Options for Linear Solver Package for HB.

| Option | Description | Default |
|---|---|---|
| TYPE | Determines which linear solver will be used.<br>■ AztecOO<br>■ Belos | AztecOO |
| AZ_kspace | Maximum size of Krylov subspace | 500 |
| AZ_tol | Convergence tolerance | 1.0E-12 |
| prec_type | Preconditioning type | “none” |

### .OPTIONS OUTPUT (Output Options)

One purpose of the .OPTIONS OUTPUT command is to allow control of the output frequency of data to files specified by .PRINT TRAN commands. The format is:

```
.OPTIONS OUTPUT INITIAL_INTERVAL=<interval> [<t0> <i0> [<t1> <i1>]* ]
```

where INITIAL_INTERVAL=<interval> specifies the starting interval time for output and <tx> <ix> specifies later simulation times <tx> where the output interval will change to <ix>. The solution is output at the exact intervals requested; this is done by interpolating the solution to the requested time points.

Another purpose is to allow the user to suppress the header and footer from standard format output files.

```
.OPTIONS OUTPUT PRINTHEADER=<boolean> PRINTFOOTER=<boolean>
```

where setting the PRINTHEADER variable to "false" will suppress the header and PRINTFOOTER variable to "false" will suppress the footer. These options are only applicable to .PRINT <analysis> FORMAT=STD files, the default format.

## .OPTIONS RESTART (Checkpointing Options)

The .OPTIONS RESTART command is used to control all checkpoint output and restarting.

The checkpointing form of the .OPTIONS RESTART command takes the following format:

**General Format:**

```
.OPTIONS RESTART [PACK=<0|1>] JOB=<job prefix>
+ [INITIAL_INTERVAL=<initial interval time> [<t0> <i0> [<t1> <i1>]* ]]
```

PACK=<0|1> indicates whether the restart data will be byte packed or not. Parallel restarts must always be packed while Windows/MingW runs are always not packed. Otherwise, data will be packed by default unless explicitly specified. JOB=<job prefix> identifies the prefix for restart files. The actual restart files will be the job name with the current simulation time appended (e.g. name1e-05 for JOB=name and simulation time 1e-05 seconds). Furthermore, INITIAL_INTERVAL=<initial interval time> identifies the initial interval time used for restart output. The <tx> <ix> intervals identify times <tx> at which the output interval (ix) should change. This functionality is identical to that described for the .OPTIONS OUTPUT command.

### Examples

To generate checkpoints at every time step (default):

**Example:** .OPTIONS RESTART JOB=checkpt

To generate checkpoints every 0.1 $\mu s$:

**Example:** .OPTIONS RESTART JOB=checkpt INITIAL_INTERVAL=0.1us

To generate unpacked checkpoints every 0.1 $\mu s$:

**Example:** `.OPTIONS RESTART PACK=0 JOB=checkpt INITIAL_INTERVAL=0.1us`

To specify an initial interval of 0.1 $\mu s$, at 1 $\mu s$ change to interval of 0.5 $\mu s$, and at 10 $\mu s$ change to interval of 0.1 $\mu s$:

**Example:**

```
.OPTIONS RESTART JOB=checkpt INITIAL_INTERVAL=0.1us 1.0us
+ 0.5us 10us 0.1us
```

## .OPTIONS RESTART (Restarting Options)

To restart from an existing restart file, specify the file by either `FILE=<restart file name>` to explicitly use a restart file or by `JOB=<job name> START_TIME=<specified name>` to specify a file prefix and a specified time. The time must exactly match an output file time for the simulator to correctly identify the correct file. To continue generating restart output files, `INITIAL_INTERVAL=<interval>` and following intervals can be appended to the command in the same format as described above. New restart files will be packed according to the previous restart file read in.

The restarting form of the `.OPTIONS RESTART` command takes the following format:

**General Format:**

```
.OPTIONS RESTART FILE=<restart file name>|JOB=<job name> START_TIME=<time>
+ [ INITIAL_INTERVAL=<interval> [<t0> <i0> [<t1> <i1>]* ]]
```

### Examples

Example restarting from checkpoint file at 0.133 $\mu s$:

**Example:** `.OPTIONS RESTART JOB=checkpt START_TIME=0.133us`

To restart from checkpoint file at 0.133 $\mu s$:

**Example:** `.OPTIONS RESTART FILE=checkpt0.000000133`

Restarting from 0.133 $\mu s$ and continue checkpointing at 0.1 $\mu s$ intervals:

**Example:**

```
 .OPTIONS RESTART FILE=checkpt0.000000133 JOB=checkpt_again
+ INITIAL_INTERVAL=0.1us
```

### .OPTIONS RESTART: special notes for use with two-level-Newton

Large parallel problems which involve power supply parasitics often require a two-level solve, in which different parts of the problem are handled separately. In most respects, restarting a two-level simulation is similar to restarting a conventional simulation. However, there are a few differences:

- When running with a two-level algorithm, **Xyce** requires (at least) two different input files. In order to do a restart of a two-level **Xyce** simulation, it is necessary to have an .OPTIONS RESTART statement in each file.
- It is necessary for the statements to be consistent. For example, the output times must be exactly the same, meaning the initial intervals must be exactly the same.
- **Xyce** will *not* check to make sure that the restart options used in different files match, so it is up to the user to ensure matching options.
- Finally, as each netlist that is part of a two-level solve will have its own .OPTIONS RESTART statement, that means that each netlist will generate and/or use its own set of restart files. As a result, the restart file name used by each netlist must be unique.

### .OPTIONS SENSITIVITY (Direct and Adjoint Sensitivity Options)

The sensitivity selections listed in Table 2.9 provide methods for controlling direct and adjoint sensitivity analysis.

SENSITIVITY options are set using the .OPTIONS SENSITIVITY command. They are only used if the netlist also includes a .SENS statement.

Table 2.9: Options for Sensitivity Package.

| Option | Description | Default |
|---|---|---|
| ADJOINT | Flag to enable adjoint sensitivity calculation | false |
| DIRECT | Flag to enable direct sensitivity calculation | false |
| OUTPUTSCALED | Flag to enable output of scaled sensitivities | false |
| OUTPUTUNSCALED | Flag to enable output of unscaled sensitivities | true |
| STDOUTPUT | Flag to enable output of sensitivies to std output | false |
| ADJOINTBEGINTIME | Start time for set of time steps over which to compute transient adjoints. | 0.0 |
| ADJOINTFINALTIME | End time for set of time steps over which to compute transient adjoints. | 1.0e+99 |
| ADJOINTTIMEPOINTS | List of comma-separated time points at which to compute transient adjoints. | – |

### 2.1.19 .PARAM (Parameter)

User defined parameter that can be used in expressions throughout the netlist.

**General Form**

```
.PARAM [<name>=<value>]*
```

**Examples**

```
.PARAM A_Param=1K
.PARAM B_Param={A_Param*3.1415926535}
```

**Arguments and Options**

`name`
`value`
: The name of a parameter and its value.

**Comments**

Parameters defined using `.PARAM` are evaluated when the netlist is read in, and therefore must evaluate to constants at the time the netlist is parsed. It is therefore illegal to use any time- or solution-dependent terms in parameter definitions, including the TIME variable or any nodal voltages. Since they must be constants, these parameters may also not be used in `.STEP` loops.

### 2.1.20 .PREPROCESS REPLACEGROUND (Ground Synonym)

The purpose of ground synonym replacement is to treat nodes with the names GND, GND!, GROUND or any capital/lowercase variant thereof as synonyms for node 0. The general invocation is

**General Form** .PREPROCESS REPLACEGROUND <bool>

---

**Arguments and Options**

bool

If TRUE, **Xyce** will treat all instances of GND, GND!, GROUND, or any capital/lowercase variant thereof, as synonyms for node 0. If FALSE, **Xyce** will consider each term as a separate node. Only one .PREPROCESS REPLACEGROUND statement is permissible in a given netlist file.

### 2.1.21 .PREPROCESS REMOVEUNUSED (Removal of Unused Components)

If a given netlist file contains devices whose terminals are all connected to the same node (*e.g.*, `R2 1 1 1M`), it may be desirable to remove such components from the netlist before simulation begins. This is the purpose of the command

**General Form** `.PREPROCESS REMOVEUNUSED [<value>]`

---

**Arguments and Options**

`value`
is a list of components separated by commas. The allowed values are

| | |
|---|---|
| `C` | Capacitor |
| `D` | Diode |
| `I` | Independent Current Source |
| `L` | Inductor |
| `M` | MOSFET |
| `Q` | BJT |
| `R` | Resistor |
| `V` | Independent Voltage Source |

---

**Examples** `.PREPROCESS REMOVEUNUSED R,C`

`.PREPROCESS` will attempt to search for all resistors and capacitors in a given netlist file whose individual device terminals are connected to the same node and remove these components from the netlist before simulation ensues. A list of components that are supported for removal is given above. Note that for MOSFETS and BJTs, three terminals on each device (the gate, source, and drain in the case of a MOSFET and the collector, base, and emitter in the case of a BJT) must be the same for the device to be removed from the netlist. As before, only one `.PREPROCESS REMOVEUNUSED` line is allowed in a given netlist file.

### 2.1.22 .PREPROCESS ADDRESISTORS (Adding Resistors to Dangling Nodes)

We refer to a *dangling node* as a circuit node in one of the following two scenarios: either the node is connected to only one device terminal, and/or the node has no DC path to ground. If several such nodes exist in a given netlist file, it may be desirable to automatically append a resistor of a specified value between the dangling node and ground. To add resistors to nodes which are connected to only one device terminal, one may use the command

**General Form** `.PREPROCESS ADDRESISTORS ONETERMINAL <value>`

---

**Arguments and Options**

`value`
: is the value of the resistor to be placed between nodes with only one device terminal connection and ground. For instance, the command

---

**Examples** `.PREPROCESS ADDRESISTORS ONETERMINAL 1G`

will add resistors of value 1G between ground and nodes with only one device terminal connection and ground. The command

---

**Examples** `.PREPROCESS ADDRESISTORS NODCPATH <value>`

acts similarly, adding resistors of value `<VALUE>` between ground and all nodes which have no DC path to ground.

The `.PREPROCESS ADDRESISTORS` command is functionally different from either of the prior `.PREPROCESS` commands in the following way: while the other commands augment the netlist file for the current simulation, a `.PREPROCESS ADDRESISTORS` statement creates an auxiliary netlist file which explicitly contains a set of resistors that connect dangling nodes to ground. If the original netlist file containing a `.PREPROCESS ADDRESISTORS` statement is called `filename`, invoking **Xyce** on this file will produce a file `filename_xyce.cir` which contains the resistors that connect dangling nodes to ground. One can then run **Xyce** on this file to run a simulation in which the dangling nodes are tied to ground. Note that, in the original run on the file `filename`, **Xyce** will continue to run a simulation as usual after producing the file `filename_xyce.cir`, but this simulation will *not* include the effects of adding resistors between the dangling nodes and ground. Refer to the **Xyce** User's Guide for more detailed examples on the use of `.PREPROCESS ADDRESISTOR` statements.

Note that it is possible for a node to have one device terminal connection and, simultaneously, have no DC path to ground. In this case, if both a `ONETERMINAL` and `NODCPATH` command are invoked, only the resistor for the `ONETERMINAL` connection is added to the netlist; the `NODCPATH` connection is omitted.

As before, each netlist file is allowed to contain only one `.PREPROCESS ADDRESISTORS ONETERMINAL` and one `.PREPROCESS ADDRESISTORS NODCPATH` line each, or else **Xyce** will exit in error.

### 2.1.23 .PRINT (Print output)

Send analysis results to an output file.

**Xyce** allows multiple output files to be created during the run and supports several options for each.

**General Form**

```
.PRINT <print type> [FORMAT=<STD|NOINDEX|PROBE|TECPLOT|RAW|CSV>]
+ [FILE=<output filename>] [WIDTH=<print field width>]
+ [PRECISION=<floating point output precision>]
+ [FILTER=<absolute value below which a number outputs as 0.0>]
+ [DELIMITER=<TAB|COMMA>] [TIMESCALEFACTOR=<real scale factor>]
+ <output variable> [output variable]*
```

---

**Examples**

```
.print tran format=tecplot V(1) I(Vsrc) {V(1)*(I(Vsrc)**2.0)}

.PRINT TRAN FORMAT=PROBE FILE=foobar.csd V(1) {abs(V(1))-5.0}

.PRINT DC FILE=foobar.txt WIDTH=19 PRECISION=15 FILTER=1.0e-10
+ I(VSOURCE5) I(VSOURCE6)

.print tran FORMAT=RAW V(1) I(Vsrc)

R1 1 0 100
X1 1 2 3 MySubcircuit
V1 3 0 1V
.SUBCKT MYSUBCIRCUIT 1 2 3
R1 1 2  100K
R2 2 4  50K
R3 4 3  1K
.ENDS

.PRINT DC V(X1:4) V(2) I(V1)
```

---

**Arguments and Options**

`print type`

A print type is the name of an analysis, one of the analysis specific print subtypes, or a specialized output command.

| Analysis | Print Type | Description |
|---|---|---|
| .AC | AC | Sets default variable list and formats for print subtypes |
| .AC | AC_IC | Overrides variable list and format for AC initial conditions |
| .DC | DC | |
| .HB | HB | |
| .HB | HB_FD | Overrides variable list and format for HB frequency domain |
| .HB | HB_IC | Overrides variable list and format for HB initial conditions |
| .HB | HB_STARTUP | Overrides variable list and format for HB start up |
| .HB | HB_TD | Overrides variable list and format for HB time domain |
| .NOISE | Noise | Outputs Noise spectral density curves |
| .TRAN | TRAN | |
| | ***Specialized Output Commands*** | |
| *Homotopy* | HOMOTOPY | Sets variable list and format for homotopy |
| .SENS | SENS | Sets variable list and format for sensitivity |

A netlist may contain many .PRINT commands, but only commands with analysis types which are appropriate for the analysis being performed are processed. This feature allows you to generate multiple formats and variable sets in a single analysis run.

For analysis types that generate multiple output files, the print subtype allows you to specify variables and output parameters for each of those output files. If there is no .PRINT <subtype> provided in the net list, the variables and parameters from the analysis type will be used.

FORMAT=<STD|NOINDEX|PROBE|TECPLOT|RAW|CSV>

The output format may be specified using the FORMAT option. The STD format outputs the data divided up into data columns. The NOINDEX format is the same as the STD format except that the index column is omitted. The PROBE format specifies that the output should be formatted to be compatible with the PSpice Probe plotting utility. The TECPLOT format specifies that the output should be formatted to be compatible with the Tecplot plotting program. The RAW format specifies that the output should comply with the SPICE binary rawfile format. Use with the **-a** command line option to output an ascii rawfile. The CSV format specifies that the output file should be a comma-separated value file

with a header indicating the variables printed in the file. It is similar to, but not identical to using DELIMITER=COMMA; the latter will also print a footer that is not compatible with most software that requires CSV format.

FILE=<output filename>
: Specifies the name of the file to which the output will be written.

WIDTH=<print field width>
: Controls the output width used in formatting the output.

PRECISION=<floating point precision>
: Number of floating point digits past the decimal for output data.

FILTER=<filter floor value>
: Used to specify the absolute value below which output variables will be printed as 0.0.

DELIMITER=<TAB|COMMA>
: Used to specify an alternate delimiter in the STD or NOINDEX format output.

TIMESCALEFACTOR=<real scale factor>
: Specify a constant scaling factor for time. Time is normally printed in units of seconds, but if one would like the units to be milliseconds, then set TIMESCALEFACTOR=1000.

<output variable>
: Following the analysis type and other options is a list of output variables. There is no upper bound on the number of output variables. The output is divided up into data columns and output according to any specified options (see options given above). Output variables can be specified as:

- V(<circuit node>) to output the voltage at <circuit node>
- V(<circuit node>,<circuit node>) to output the voltage difference between the first <circuit node> and second <circuit node>
- I(<device>) to output current through a two terminal device
- I<lead abbreviation>(<device>) to output current into a particular lead of a three or more terminal device (see the Comments, below, for details)
- P(<device>) or W(<device>) to output the power dissipated/generated in a device. At this time, not all devices support power calculations. In addition, the results for semiconductor devices (D, J, M, Q and Z devices) and the lossless transmission device (T device) may differ from other simulators. Consult the Features Supported by Xyce Device Models table in section 2.3 and the individual sections on each device for more details.

- N(<device internal variable>) to output a specific device's internal variable. (The comments section below has more detail on this syntax.)
- {expression} to output an expression
- <device>:<parameter> to output a device parameter
- <model>:<parameter> to output a model parameter

When the analysis type is AC or HB, additional output variable formats are available:

- VR(<circuit node>) to output the real component of voltage response at a point in the circuit
- VI(<circuit node>) to output the imaginary component of voltage response at a point in the circuit
- VM(<circuit node>) to output the magnitude of voltage response
- VP(<circuit node>) to output the phase of voltage response
- VDB(<circuit node>) to output the magnitude of voltage response in decibels.
- VR(<circuit node>,<circuit node>) to output the real component of voltage response between two nodes in the circuit
- VI(<circuit node>,<circuit node>) to output the imaginary component of voltage response between two nodes in the circuit
- VM(<circuit node>,<circuit node>) to output the magnitude of voltage response between two nodes in the circuit
- VP(<circuit node>,<circuit node>) to output the phase of voltage response between two nodes in the circuit
- VDB(<circuit node>,<circuit node>) to output the magnitude of voltage response between two nodes in the circuit, in decibels
- IR(<device>) to output the real component of the current through a two terminal device
- II(<device>) to output the imaginary component of the current through a two terminal device
- IM(<device>) to output the magnitude of the current through a two terminal device
- IP(<device>) to output the phase of the current through a two terminal device
- IDB(<device>) to output the magnitude of the current through a two terminal device in decibels.

In AC analysis, outputting a voltage node without any of these optional designators results in output of the real and imaginary parts of the signal. Note that under AC analysis, printing of device lead currents, e.g. I(<device>), is not supported.

Note that when using the variable list for time domain output, usage of frequency domain functions like VDB can result in -Inf output being written to the output file. This is easily solved by defining the time

domain equivalent command to specify the correct output for time domain data.

Further explanation of current specification is in comments section below.

---

**Comments**

- Currents are positive flowing from node 1 to node 2 for two node devices, and currents are positive flowing into a particular lead for multi-terminal devices.
- `<circuit node>` is simply the name of any node in your top-level circuit, or `<subcircuit name>:<node>` to reference nodes that are internal to a subcircuit.
- `<device>` is the name of any device in your top-level circuit, or `<subcircuit name>:<device>` to reference devices that are internal to a subcircuit.
- `<lead abbreviation>` is a single character designator for individual leads on a device with three or more leads. For bipolar transistors these are: c (collector), b (base), e (emitter), and s (substrate). For mosfets, lead abbreviations are: d (drain), g (gate), s (source), and b (bulk). SOI transistors have: d, g, s, e (bulk), and b (body). For PDE devices, the nodes are numbered according to the order they appear, so lead currents are referenced like I1(`<device>`), I2(`<device>`), etc.
- The "lead current" method of printing from devices in Xyce is done at a low level with special code added to each device; the method is therefore only supported in specific devices that have this extra code. So, if `.PRINT I(Y)` does not work, for a device called Y, then you will need to attach an ammeter (zero-volt voltage source) in series with that device and print the ammeter's current instead.
- Lead currents of subcircuit ports are not supported. However, access is provided via specific node names (e.g., `X1:internalNodeName`) or specific devices (e.g., `X1:V3`) inside the subcircuit.
- Wildcards are partially supported on `.PRINT` lines. `V(*)` will print all of the node voltages in the circuit. `I(*)` will print all of the currents that are implemented in voltage sources. If, for example, an ammeter (zero-volt voltage source) is placed in series with a resistor then the current through that resistor would be included in the `I(*)` output.
- For STD formatted output, the values of the output variables are output as a series of columns (one for each output variable).
- When the command line option `-r <raw-file-name>` is used, all of the output is diverted to the *raw-file-name* file as a concatenation of the plots, and each plot includes all of the variables of the circuit. Using the `-a` options in conjunction with the `-r` option results in a raw file that is output all in ascii characters.
- Any output going to the same file from one simulation of **Xyce** results in the concatenation of output. However, if a simulation is re-run then the original output will we over-written.

- During analysis a number of output files may be generated. The selection of which files are created depends on a variety of factors, most obvious of which is the `.PRINT` command. See section 2.1 for more details.
- Frequency domain values are output as complex values for Raw, TecPlot and Probe formats when a complex variable is printed. For STD and CSV formats, the output appears in two columns, the real part followed by the imaginary part. The print variables `VR, VI, VM, VDB` and `VP` print the scalar values for the real part, imaginary part, magnitude, magnitude in decibels, and phase, respectively.
- When outputting a device or model parameter, it is usually necessary to specify both the device name and the parameter name, separated by a colon. For example, the saturation current of a diode model `DMOD` would be requested as `DMOD:IS`. The section on "Device Parameters and Internal Variables" below gives more details and provides an example.
- The `N()` syntax is used to access internal solution variables that are not normally visible from the netlist, such as voltages on internal nodes and/or branch currents within a given device. The internal solution variables for each **Xyce** device are not given in the Reference Guide sections on those devices. However, if the user runs `Xyce -namesfile <filename> <netlist>` then **Xyce** will output into the first filename a list of all solution variables generated by that netlist. The section on "Device Parameters and Internal Variables" below gives more details and provides an example.
- If multiple `.PRINT` lines are given for the same analysis type, the same output file name, and the same format, the variable lists of all matching `.PRINT` lines are merged together in the order found, and the resulting output is the same as if all the print line variable lists had been specified on a single `.PRINT` line.
- Attempting to specify multiple `.PRINT` lines for the same analysis type to the same file with different specifications of `FORMAT` is an error.
- The print statements for some analysis types could result in multiple output files. For example, `.PRINT HB` will produce both frequency- and time-domain output, and place these in different files. The default name of these files is the name of the netlist followed by a data type suffix, followed by a format-specific extension.

  In **Xyce** 6.4, if a `FILE` option is given to such a print statement, only the "primary" data for that analysis type is sent to the named file. The secondary data is still sent to the default file name. This behavior may be subject to change in future releases.

  For analysis types that can produce multiple files, special `.PRINT` lines have been provided to allow the user to control the handling of the additional files. These additional print line specifiers are enumerated in the analysis-specific sections below.

  If one desires that all outputs for a given analysis type be given user-defined file names, it is necessary to use additional print lines with additional `FILE` options. For example, if one uses a `FILE` option to a `.PRINT`

HB line, only frequency-domain data will be sent to the named file. To redirect the time-domain data to a file with a user-defined name, add a .PRINT HB_TD line. See the individual analysis types below for details of what additional print statements are available.

## Print AC Analysis

AC Analysis generates two output files, the primary output is in the frequency domain and the initial conditions output is in the time domain.

Note that when using the .PRINT AC to create the variable list for DC type output, usage of frequency domain functions like VDB can result in -Inf output being written to the output file. This is easily solved by defining a .PRINT AC_IC command to specify the correct output for initial condition data.

Homotopy output can also be generated.

Table 2.10: Print AC Analysis Type

| Trigger | Files | Columns/Description |
|---|---|---|
| .PRINT AC | *circuit-file*.FD.prn | INDEX FREQ |
| .PRINT AC FORMAT=NOINDEX | *circuit-file*.FD.prn | FREQ |
| .PRINT AC FORMAT=CSV | *circuit-file*.FD.csv | FREQ |
| .PRINT AC FORMAT=RAW | *circuit-file*.raw | FREQ |
| runxyce -a<br>.PRINT AC FORMAT=RAW | *circuit-file*.raw | FREQ |
| .PRINT AC FORMAT=TECPLOT | *circuit-file*.FD.dat | FREQ |
| .PRINT AC FORMAT=PROBE | *circuit-file*.FD.csd | – |
| ***Add .OP To Netlist To Enable AC_IC Output*** | | |
| .PRINT AC_IC | *circuit-file*.TD.prn | INDEX TIME |
| .PRINT AC_IC FORMAT=CSV | *circuit-file*.TD.csv | TIME |
| .PRINT AC_IC FORMAT=RAW | *circuit-file*.raw | TIME |
| runxyce -a<br>.PRINT AC_IC FORMAT=RAW | *circuit-file*.raw | TIME |
| .PRINT AC_IC FORMAT=TECPLOT | *circuit-file*.TD.dat | TIME |
| .PRINT AC_IC FORMAT=PROBE | *circuit-file*.TD.csd | – |
| ***Command Line Raw Override Output*** | | |
| runxyce -r | *circuit-file*.raw | All circuit variables printed |
| runxyce -r -a | *circuit-file*.raw | All circuit variables printed |
| ***Additional Output Available*** | | |
| .OP | *log file* | Operating point data |

Table 2.10: Print AC Analysis Type

| Trigger | Files | Columns/Description |
|---|---|---|
| .SENS<br>.PRINT SENS | see Print Sensitivity | |
| .OPTIONS NONLIN CONTINUATION=<method><br>.PRINT HOMOTOPY | see Print Homotopy | |

## Print DC Analysis

DC Analysis generates output based on the format specified by the `.PRINT` command.

Homotopy and sensitivity output can also be generated.

Table 2.11: Print DC Analysis Type

| Trigger | Files | Columns/Description |
|---|---|---|
| .PRINT DC | *circuit-file*.prn | INDEX |
| .PRINT DC FORMAT=NOINDEX | *circuit-file*.prn | – |
| .PRINT DC FORMAT=CSV | *circuit-file*.csv | – |
| .PRINT DC FORMAT=RAW | *circuit-file*.raw | – |
| runxyce -a<br>.PRINT DC FORMAT=RAW | *circuit-file*.raw | – |
| .PRINT DC FORMAT=TECPLOT | *circuit-file*.dat | – |
| .PRINT DC FORMAT=PROBE | *circuit-file*.csd | – |
| ***Command Line Raw Override Output*** | | |
| runxyce -r | *circuit-file*.raw | All circuit variables |
| runxyce -r -a | *circuit-file*.raw | All circuit variables |
| ***Additional Output Available*** | | |
| .OP | *log file* | Operating point data |
| .SENS<br>.PRINT SENS | see Print Sensitivity | |
| .OPTIONS NONLIN CONTINUATION=<method><br>.PRINT HOMOTOPY | see Print Homotopy | |

## Print Harmonic Balance Analysis

HB Analysis generates one output file in the frequency domain and one in the time domain based on the format specified by the `.PRINT` command. Additional startup and initial conditions output can be generated based on `.OPTIONS` commands.

Note that when using the `.PRINT HB` to create the variable list for time domain output, usage of frequency domain functions like `VDB` can result in -Inf output being written to the output file. This

is easily solved by defining a `.PRINT HB_TD`, `.PRINT HB_IC` and `.PRINT HB_STARTUP` commands to specify the correct output for the time domain data.

Homotopy output can also be generated.

Table 2.12: Print HB Analysis Type

| Trigger | Files | Columns/Description |
|---|---|---|
| `.PRINT HB` | *circuit-file*.HB.TD.prn<br>*circuit-file*.HB.FD.prn<br>*circuit-file*.hb_ic.prn | INDEX TIME<br>INDEX FREQ<br>INDEX TIME |
| `.PRINT HB FORMAT=NOINDEX` | *circuit-file*.HB.TD.prn<br>*circuit-file*.HB.FD.prn<br>*circuit-file*.hb_ic.prn | TIME<br>FREQ<br>TIME |
| `.PRINT HB FORMAT=CSV` | *circuit-file*.HB.TD.csv<br>*circuit-file*.HB.FD.csv<br>*circuit-file*.hb_ic.csv | TIME<br>FREQ<br>TIME |
| `.PRINT HB FORMAT=TECPLOT` | *circuit-file*.HB.TD.dat<br>*circuit-file*.HB.FD.dat<br>*circuit-file*.hb_ic.dat | TIME<br>FREQ<br>TIME |
| `.PRINT HB_FD` | *circuit-file*.HB.TD.prn | INDEX FREQ |
| `.PRINT HB_FD FORMAT=NOINDEX` | *circuit-file*.HB.FD.prn | FREQ |
| `.PRINT HB_FD FORMAT=CSV` | *circuit-file*.HB.FD.csv | FREQ |
| `.PRINT HB_FD FORMAT=TECPLOT` | *circuit-file*.HB.FD.dat | FREQ |
| `.PRINT HB_TD` | *circuit-file*.HB.TD.prn | INDEX TIME |
| `.PRINT HB_TD FORMAT=NOINDEX` | *circuit-file*.HB.TD.prn | TIME |
| `.PRINT HB_TD FORMAT=CSV` | *circuit-file*.HB.TD.csv | TIME |
| `.PRINT HB_TD FORMAT=TECPLOT` | *circuit-file*.HB.TD.dat | TIME |
| ***Command Line Raw Override Output*** | | |
| `runxyce -r` | *circuit-file*.raw | All circuit variables printed |
| `runxyce -r -a` | *circuit-file*.raw | All circuit variables printed |
| ***Startup Period*** | | |
| `.OPTIONS HBINT STARTUPPERIODS=<n>`<br>`.PRINT HB_STARTUP` | *circuit-file*.startup.prn | INDEX TIME |
| `.OPTIONS HBINT STARTUPPERIODS=<n>`<br>`.PRINT HB_STARTUP FORMAT=NOINDEX` | *circuit-file*.startup.prn | TIME |
| `.OPTIONS HBINT STARTUPPERIODS=<n>`<br>`.PRINT HB_STARTUP FORMAT=CSV`<br>`.OPTIONS HBINT STARTUPPERIODS=<n>` | *circuit-file*.startup.csv | TIME |
| `.OPTIONS HBINT STARTUPPERIODS=<n>`<br>`.PRINT HB_STARTUP FORMAT=TECPLOT`<br>`.OPTIONS HBINT STARTUPPERIODS=<n>` | *circuit-file*.startup.dat | TIME |
| ***Initial Conditions*** | | |

Table 2.12: Print HB Analysis Type

| Trigger | Files | Columns/Description |
|---|---|---|
| `.OPTIONS HBINT SAVEICDATA=1`<br>`.PRINT HB_IC` | *circuit-file*.hb_ic.prn | INDEX TIME |
| `.OPTIONS HBINT SAVEICDATA=1`<br>`.PRINT HB_IC FORMAT=NOINDEX` | *circuit-file*.hb_ic.prn | TIME |
| `.OPTIONS HBINT SAVEICDATA=1`<br>`.PRINT HB_IC FORMAT=CSV` | *circuit-file*.hb_ic.csv | TIME |
| `.OPTIONS HBINT SAVEICDATA=1`<br>`.PRINT HB_IC FORMAT=TECPLOT` | *circuit-file*.hb_ic.dat | TIME |
| ***Additional Output Available*** | | |
| `.OP` | *log file* | Operating point data |
| `.SENS`<br>`.PRINT SENS` | see Print Sensitivity | |
| `.OPTIONS NONLIN CONTINUATION=<method>`<br>`.PRINT HOMOTOPY` | see Print Homotopy | |

## Print Noise Analysis

NOISE Analysis generates two output files, the primary output is in the frequency domain and the initial conditions output is in the time domain.

Table 2.13: Print NOISE Analysis Type

| Trigger | Files | Columns/Description |
|---|---|---|
| `.PRINT NOISE` | *circuit-file*.FD.prn | INDEX FREQ |
| `.PRINT NOISE FORMAT=NOINDEX` | *circuit-file*.FD.prn | FREQ |
| `.PRINT NOISE FORMAT=CSV` | *circuit-file*.FD.csv | FREQ |
| `.PRINT NOISE FORMAT=TECPLOT` | *circuit-file*.FD.dat | FREQ |
| ***Additional Output Available*** | | |
| `.OP` | *log file* | Operating point data |
| `.OPTIONS NONLIN CONTINUATION=<method>`<br>`.PRINT HOMOTOPY` | see Print Homotopy | |

## Print Transient Analysis

Transient Analysis generates time domain output based on the format specified by the `.PRINT` command.

Homotopy and sensitivty output can also be generated.

Table 2.14: Print Transient Analysis Type

| Trigger | Files | Columns/Description |
|---|---|---|
| `.PRINT TRAN` | *circuit-file*.prn | INDEX TIME |
| `.PRINT TRAN FORMAT=NOINDEX` | *circuit-file*.prn | TIME |
| `.PRINT TRAN FORMAT=CSV` | *circuit-file*.csv | TIME |
| `.PRINT TRAN FORMAT=RAW` | *circuit-file*.raw | TIME |
| `runxyce -a`<br>`.PRINT TRAN FORMAT=RAW` | *circuit-file*.raw | TIME |
| `.PRINT TRAN FORMAT=TECPLOT` | *circuit-file*.dat | TIME |
| `.PRINT TRAN FORMAT=PROBE` | *circuit-file*.csd | |
| ***Command Line Raw Override Output*** | | |
| `runxyce -r` | *circuit-file*.raw | All circuit variables printed |
| `runxyce -r -a` | *circuit-file*.raw | All circuit variables printed |
| ***Additional Output Available*** | | |
| `.OP` | *log file* | Operating point data |
| `.SENS`<br>`.PRINT SENS` | see Print Sensitivity | |
| `.OPTIONS NONLIN CONTINUATION=<method>`<br>`.PRINT HOMOTOPY` | see Print Homotopy | |

## Print Homotopy

Homotopy output is generated by the inclusion of the `.OPTIONS NONLIN CONTINUATION=<method>` command.

Table 2.15: Print Homotopy

| Trigger | Files | Columns/Description |
|---|---|---|
| `.OPTIONS NONLIN CONTINUATION=<method>`<br>`.PRINT <analysis-type>` | *circuit-file*.HOMOTOPY.prn | INDEX TIME |

## Print Sensitivity

Sensitivity is enabled by inclusion of the .SENS command.

Table 2.16: Print Sensitivities

| Trigger | Files | Columns/Description |
|---|---|---|
| `.SENS objfunc=<`$obj$`> p=[`$p_1$`1][,`$p_n$`]*`<br>`.PRINT SENS` | *circuit-file*.SENS.prn | $obj$ d$obj$/d($p_1$) d$obj$/d($p_n$) |

Table 2.16: Print Sensitivities

| Trigger | Files | Columns/Description |
|---|---|---|
| `.SENS objfunc=<`$obj$`> p=[`$p_1$`][,`$p_n$`]*`<br>`.PRINT SENS FORMAT=TECPLOT` | *circuit-file*.SENS.dat | $obj$ d$obj$/d($p_1$) d$obj$/d($p_n$) |

Table 2.17: Print Transient Adjoint Sensitivities

| Trigger | Files | Columns/Description |
|---|---|---|
| `.SENS objfunc=<`$obj$`> p=[`$p_1$`1][,`$p_n$`]*`<br>`.PRINT TRANADJOINT` | *circuit-file*.TRADJ.prn | $obj$ d$obj$/d($p_1$) d$obj$/d($p_n$) |
| `.SENS objfunc=<`$obj$`> p=[`$p_1$`][,`$p_n$`]*`<br>`.PRINT TRANADJOINT FORMAT=TECPLOT` | *circuit-file*.TRADJ.dat | $obj$ d$obj$/d($p_1$) d$obj$/d($p_n$) |

## Parameter Stepping

During parameter stepping, enabled with the `.STEP` command, the output generated by each of analysis types varies. Generally the FORMAT indicates this variation, however some combinations of analysis and format can result in additional variation.

The following table lists how the output differs for each analysis type and format.

| Print Type | Format | Description |
|---|---|---|
| AC | STD | 1, 3, 4, 11, 12, 13 |
| AC | CSV | 4, 11 |
| AC | PROBE | 16 |
| AC | TECPLOT | 4, 12, 13, 18 |
| AC | RAW | 19 |
| AC | RAW (runxyce -a) | 19 |
| AC_IC | STD | 1, 4, 11, 12, 13 |
| AC_IC | CSV | 4, 11 |
| AC_IC | PROBE | 16 |
| AC_IC | TECPLOT | 12, 13, 18 |
| AC_IC | RAW | 19 |
| AC_IC | RAW (runxyce -a) | 19 |
| DC | STD | 1, 11, 12 |
| DC | CSV | 11 |
| DC | PROBE | 17 |
| DC | TECPLOT | 4, 12, 13, 18 |
| DC | RAW | 19 |
| DC | RAW (runxyce -a) | 19 |

| Print Type | Format | Description |
|---|---|---|
| HB_TD | STD | 1, 2, 4, 11, 12, 13 |
| HB_TD | CSV | 11 |
| HB_TD | TECPLOT | 12, 13, 18 |
| HB_FD | STD | 1, 3, 4, 11, 12, 13 |
| HB_FD | CSV | 4, 11 |
| HB_FD | TECPLOT | 4, 12, 13, 18 |
| HB_IC | STD | 1, 2, 4, 11, 12, 13 |
| HB_IC | CSV | 11 |
| HB_IC | TECPLOT | 12, 13, 18 |
| HB_STARTUP | STD | 1, 2, 4, 11, 12, 13 |
| HB_STARTUP | CSV | 11 |
| HB_STARTUP | TECPLOT | 12, 13, 18 |
| TRAN | STD | 1, 2, 11, 12 |
| TRAN | CSV | 2, 11 |
| TRAN | PROBE | 17 |
| TRAN | TECPLOT | 2, 4, 12, 13, 18 |
| TRAN | RAW | 2, 19 |
| TRAN | RAW (runxyce -a) | 2, 19 |
| ***Specialized Output Commands*** | | |
| HOMOTOPY | STD | 1, 2, 4, 11, 12, 13 |
| HOMOTOPY | PROBE | 17 |
| HOMOTOPY | TECPLOT | 2, 4, 12, 13, 18 |
| SENSITIVITY | STD | 1, 2, 11, 12, 14 |
| SENSITIVITY | TECPLOT | 2, 12, 14, 18 |

| Description | |
|---|---|
| 1 | INDEX column added to output variable list |
| 2 | TIME column added to output variable list |
| 3 | FREQ column added to output variable list |
| 4 | Frequency domain data written as Re($var$) and Im($var$) |
| 11 | INDEX resets to zero at start of each .STEP |
| 12 | Prints 'End of Xyce(TM) Parameter Sweep' at end of .STEP simulation |
| 13 | Prints 'End of Xyce(TM) Simulation' at end of non-.STEP simulation |
| 14 | Prints 'End of Xyce(TM) Sensitivity Simulation' at end of non-.STEP simulation |

| Description | |
|---|---|
| 16 | Two '#;' at the end of each .STEP (BUG) |
| 17 | One '#;' at end of each .STEP |
| 18 | New ZONE for each .STEP, and AUXDATA for each .STEP parameter |
| 19 | Prints 'Plotname: Step Analysis: Step $s$ of $n$ params' at the start of each .STEP |

## Device Parameters and Internal Variables

This subsection describes how to print out device parameters and device internal variables, via a simple V-R circuit example. In particular, the example given below gives illustrative examples of how to print out the voltage at a node (V(1)), the current through a device (I(V1)), the current through a device using using an internal solution variable (N(V1_branch)), a device parameter (R1:R) and the power dissipated by a device (P(R1)). It also shows how device parameters and internal variables can be used in a **Xyce** expression.

```
* filename is example.cir
.DC V1 1 2 1
V1 1 0 1
R1 1 0 2
.PRINT DC FORMAT=NOINDEX PRECISION=2 WIDTH=8
+ V(1) I(V1) N(V1_branch) R1:R P(R1) {R1:R*N(V1_branch)*I(V1)}
.END
```

The **Xyce** output would then be (where the NOFORMAT, WIDTH and PRECISION arguments were used mainly to format the example output for this guide):

```
V(1)        I(V1)     N(V1_BRANCH)    R1:R        P(R1)     {R1:R*N(V1_BRANCH)*I(V1)}
1.00e+00   -5.00e-01   -5.00e-01    2.00e+00    5.00e-01    5.00e-01
2.00e+00   -1.00e+00   -1.00e+00    2.00e+00    2.00e+00    2.00e+00
```

The internal solution variables for each **Xyce** device are typically not given in the Reference Guide sections on those devices. However, if for the example given above, the user runs Xyce -namesfile example_names example.cir then the file example_names would contain a list of the two solution variables that are accessible with the N() syntax on a .PRINT line. In this simple example, they are the voltage at Node 1 and the branch current through the voltage source V1. If V1 was in a subcircuit then the example_names file would have shown the "fully-qualified" device name, including the subcircuit names.

```
HEADER
0    v1_branch
1            1
```

Additional (and more useful) examples for using the N() syntax to print out:

- The $M$, $R$, $B$ and $H$ internal variables for mutual inductors are given in Section 2.3.6. This includes an example where the mutual inductor is in a sub-circuit.
- The $g_m$ (tranconductance), $V_{th}$, $V_{ds}$, $V_{gs}$, $V_{bs}$, and $V_{dsat}$ internal variables for the BSIM3 and BSIM4 models for the MOSFET are given in Section 2.3.19.

In these two cases, only the $M$ and $R$ variables for the mutual inductors are actually solution variables. However, the `-namesfile` approach can still be used to determine the fully-qualified **Xyce** device names required to use the `N()` syntax.

## 2.1.24 .RESULT (Print results)

Outputs the value of user-specified expressions at the end of a simulation.

**General Form** `.RESULT {output variable}`

---

**Examples**

```
.RESULT {V(a)}
.RESULT {V(a)+V(b)}
```

---

**Comments** The `.RESULT` line must use an expression. The line `.RESULT V(a)` will result in a parse error.

Each `.RESULT` line must have only one expression. Multiple `.RESULT` lines can be used though to output multiple columns in the output `.res` file.

**Xyce** will not produce output for `.RESULT` statements if there are no `.STEP` statements in the netlist.

### Example Netlist

`.RESULT` lines can be combined with `.STEP` lines to output the ending values of multiple simulation runs in one `.res` file, as shown in the following usage example. The resultant `.res` file will have four lines that give the final values of the expressions `{v(b)}` and `{v(b)*v(b)/2}` at time=0.75 seconds for all four requested combinations of `R2` and `v_amplitude`.

```
Simple Example of .RESULT capability with .STEP
R1 a b 10.0
R2 b 0 2.0

.GLOBAL_PARAM  v_amplitude=2.0
Va a 0 sin (5.0 {v_amplitude} 1.0 0.0 0.0)

.PRINT TRAN v(b) {v(b)*v(b)/2}
.TRAN 0 0.75

.STEP R2 1.0 2.0 1.0
.STEP v_amplitude 1.0 2.0 1.0

.RESULT {v(b)}
.RESULT {v(b)*v(b)/2}

.END
```

### 2.1.25 .SAVE (Save operating point conditions)

Stores the operating point of a circuit in the specified file for use in subsequent simulations. The data may be saved as .IC or .NODESET lines.

**General Form**

```
.SAVE [TYPE=<IC|NODESET>] [FILE=<filename>] [LEVEL=<all|none>]
+ [TIME=<save_time>]
```

---

**Examples**

```
.SAVE TYPE=IC FILE=mycircuit.ic
.SAVE TYPE=NODESET FILE=myothercircuit.ic

.include mycircuit.ic
```

---

**Comments**

The file created by .SAVE will contain .IC or .NODESET lines containing all the voltage node values at the DC operating point of the circuit. The default **TYPE** is NODESET. The default filename is *netlist.cir*.ic.

The resulting file may be used in subsequent simulations to obtain quick DC convergence simply by including it in the netlist, as in the third example line above. **Xyce** has no corresponding .LOAD statement.

The **LEVEL** parameter is included for compatability with HSPICE netlists. If none is specified, then no save file is created. The default **LEVEL** is all.

**TIME** is also an HSPICE compatibility parameter. This is unsupported in **Xyce**. **Xyce** outputs the save file only at time=0.0.

### 2.1.26 .SENS (Compute DC or transient sensitivities)

Computes sensitivies for a user-specificed objective function with respect to a user-specified list of circuit parameters.

**General Form**

```
.SENS objfunc=<output expression(s)> param=<circuit parameter(s)>
```

**Examples**

```
.SENS objfunc={0.5*(V(B)-3.0)**2.0} param=R1:R,R2:R
.options SENSITIVITY direct=1 adjoint=1

.SENS objfunc={I(VM)},{V(3)*V(3)} param= Q2N2222:bf
```

**Comments**

This capability can be applied to either DC or transient analysis. For both DC and transient, both direct and adjoint sensitivities are supported, and the user can optionally request either direct or adjoint sensitivities, or both.

Although **Xyce** will allow the user to specify both direct and adjoint, one would generally not choose to do both. The best choice of sensitivity method depends on the problem. For problems with a small number of parameters, and (possibly) lots of objective functions, then the direct method is a more efficient choice. For problems with large numbers of parameters, but a small number of objective functions, the adjoint method is more efficient.

For all variants of sensitivity analysis, it is necessary to specify circuit parameters on the `.SENS` line in a comma-separated list. Unlike the SPICE version, this capability will not automatically use every parameter in the circuit. It is also necessary for all variations of sensitivity analysis to specify at least one objective function. This capability will not assume any particular objective function. Also, it is possible to specify multiple objective functions, in a comma-separated list.

As noted, for transient analysis, both types of sensitivities are supported. Direct sensitivities are computed at each time step during the forward calculation. Transient adjoint sensitivities, in contrast, must be computed using a reverse time integration method. The reverse time integration must be performed after the original forward calculation is complete. As such, transient adjoint sensitivity calculations can be thought of as a post-processing step. One consequence of this is that transient adjoint output must be specified using the `.PRINT TRANADJOINT` type, rather than the `.PRINT SENS` type.

If transient adjoints are specified, the default behavior for the capability is for a transient sensitivity calculation be performed for each time step, even if the forward transient simulation consists of millions of steps. For adjoint calculations, this can be problematic, as adjoint methods (noted above) are not very efficient when applied to problems with a large number of objective functions. Each time step, from the point of view of transient adjoints, is effectively a separate objective function. As such, this isn't the best use of adjoints. One can specify a list of time points for which to compute transient adjoint sensitivities.

For many practical problems, the sensitivies at only one or a handful of points is needed, so this is a good way to mitigate the computational cost of adjoints.

## 2.1.27 .STEP (Step Parametric Analysis)

Calculates a full analysis (.DC, .TRAN, .AC, etc.) over a range of parameter values. This type of analysis is very similar to .DC analysis. Similar to .DC analysis, .STEP supports sweeps which are linear, decade logarithmic, octave logarithmic, or a list of values.

`LIN` Linear sweep
: The sweep variable is swept linearly from the starting to the ending value.

`OCT` Sweep by octaves
: The sweep variable is swept logarithmically by octaves.

`DEC` Sweep by decades
: The sweep variable is swept logarithmically by decades.

### Linear Sweeps

**General Form**

```
.STEP <parameter name> <initial> <final> <step>
```

**Examples**

```
.STEP TEMP -45 -55 -10
.STEP R1 45 50 5
.STEP C101:C 45 50 5
.STEP DLEAK:IS 1.0e-12 1.0e-11 1.0e-12
.STEP V1 20 10 -1
```

**Arguments and Options**

`initial`
: Initial value for the parameter.

`final`
: Final value for the parameter.

`step`
: Value that the parameter is incremented at each step.

**Comments**

STEP parameter analysis will sweep a parameter from its initial value to its final value, at increments of the step size. At each step of this sweep, it will conduct a full analysis (.DC, .TRAN, .AC, etc.) of the circuit.

The specification is similar to that of a .DC sweep, except that each parameter gets its own .STEP line in the input file, rather than specifying all of them on a single line.

Output, as designated by a .PRINT statement, is slightly more complicated in the case of a .STEP simulation. If the user has specified a .PRINT line in the input file, **Xyce** will output two files. All steps of the sweep to a single output file as usual, but with the results of each step appearing one after another with

the “Index” column starting over at zero. Additionally, a file with a “.res” suffix will be produced indicating what parameters were used for each iteration of the step loops.

## Decade Sweeps

**General Form**

```
.STEP DEC <sweep variable name> <start> <stop> <points>
```

---

**Examples**

```
.STEP DEC VIN 1 100 2
.STEP DEC R1 100 10000 3
.STEP DEC TEMP 1.0 10.0 3
```

## Octave Sweeps

**General Form**

```
.STEP OCT <sweep variable name> <start> <stop> <points>
```

---

**Examples**

```
.STEP OCT VIN 0.125 64 2
.STEP OCT TEMP 0.125 16.0 2
.STEP OCT R1 0.015625 512 3
```

## List Sweeps

**General Form**

```
.STEP <sweep variable name> LIST <val> <val> <val>...
+ [<sweep variable name> LIST <val> <val> ...]...
```

---

**Examples**

```
.STEP VIN LIST 1.0 2.0 10. 12.0
.STEP TEMP LIST 8.0 21.0
```

## 2.1.28 .SUBCKT (Subcircuit)

The .SUBCKT statement begins a subcircuit definition by giving its name, the number and order of its nodes and the names and default parameters that direct its behavior. The .ENDS statement signifies the end of the subcircuit definition. See Section 2.3.30 for more information on using subcircuits with the X device.

**General Form**

```
.SUBCKT <name> [node]*
+ [PARAMS: [<name>=<value>]* ]
...
.ENDS
```

---

**Examples**

```
.SUBCKT OPAMP 10 12 111 112 13
...
.ENDS

.SUBCKT FILTER1 INPUT OUTPUT PARAMS: CENTER=200kHz,
+ BANDWIDTH=20kHz
...
.ENDS

.SUBCKT PLRD IN1 IN2 IN3 OUT1
+ PARAMS: MNTYMXDELY=0 IO_LEVEL=1
...
.ENDS

.SUBCKT 74LS01 A B Y
+ PARAMS: MNTYMXDELY=0 IO_LEVEL=1
...
.ENDS
```

---

**Arguments and Options**

`name`
: The name used to reference a subcircuit.

`node`
: An optional list of nodes. This is not mandatory since it is feasible to define a subcircuit without any interface nodes.

`PARAMS:`
: Keyword that provides values to subcircuits as arguments for use as expressions in the subcircuit. Parameters defined in the PARAMS: section may be used in expressions within the body of the subcircut and will take the default values specified in the subcircuit definition unless overridden by a PARAMS: section when the subcircuit is instantiated.

**Comments**

A subcircuit designation ends with a `.ENDS` command. The entire netlist between `.SUBCKT` and `.ENDS` is part of the definition. Each time the subcircuit is called via an `X` device, the entire netlist in the subcircuit definition replaces the `X` device.

There must be an equal number of nodes in the subcircuit call and in its definition. As soon as the subcircuit is called, the actual nodes (those in the calling statement) substitute for the argument nodes (those in the defining statement).

Node zero cannot be used in this node list, as it is the global ground node.

Subcircuit references may be nested to any level. Subcircuits definitions may also be nested; a `.SUBCKT` statement and its closing `.ENDS` may appear between another `.SUBCKT/.ENDS` pair. A subcircuit defined inside another subcircuit definition is local to the outer subcircuit and may not be used at higher levels of the circuit netlist.

Subcircuits should include only device instantiations and possibly these statements:

- `.MODEL` (model definition)
- `.PARAM` (parameter)
- `.FUNC` (function)

Models, parameters, and functions defined within a subcircuit are scoped to that definition. That is they are only accessible within the subcircuit definition in which they are included. Further, if a `.MODEL`, `.PARAM` or a `.FUNC` statement is included in the main circuit netlist, it is accessible from the main circuit as well as all subcircuits.

Node, device, and model names are scoped to the subcircuit in which they are defined. It is allowable to use a name in a subcircuit that has been previously used in the main circuit netlist. When the subcircuit is flattened (expanded into the main netlist), all of its names are given a prefix via the subcircuit instance name. For example, `Q17` becomes `X3:Q17` after expansion. After expansion, all names are unique. The single exception occurs in the use of global node names, which are not expanded.

## 2.1.29 .TRAN (Transient Analysis)

Calculates the time-domain response of a circuit for a specified duration.

**General Form**

```
.TRAN <initial step value> <final time value>
+ [<start time value> [<step ceiling value>]] [NOOP] [UIC]
+ [{schedule( <time>, <maximum time step>, ... )}]
```

---

**Examples**

```
.TRAN 1us 100ms
.TRAN 1ms 100ms 0ms .1ms
.TRAN 0 2.0e-3  {schedule( 0.5e-3, 0, 1.0e-3, 1.0e-6, 2.0e-3, 0 )}
```

---

**Arguments and Options**

`initial step value`
: Used to calculate the initial time step (see below).

`final time value`
: Sets the end time (duration) for the analysis.

`start time value`
: Sets the time at which output of the simulation results is to begin. Defaults to zero.

`step ceiling value`
: Sets a maximum time step. Defaults to ((final time value)-(start time value))/10, unless there are breakpoints (see below).

`NOOP`
: Specifies that no operating point calculation is to be performed.

`UIC` Specifies that no operating point calculation is to be performed, and that the specified initial condition (from .IC lines) should be used in its place. Unspecified values are set to zero. Finally, the .IC capability can only set voltage values, not current values.

`schedule(<time>, <maximum time step>, ...)`
: Specifies a schedule for maximum allowed time steps. The list of arguments, $t_0$, $\Delta t_0$, $t_1$, $\Delta t_1$, *etc.* implies that a maximum time step of $\Delta t_0$ will be used while the simulation time is greater than or equal to $t_0$ and less than $t_1$. A maximum time step of $\Delta t_1$ will be used when the simulation time is greater or equal to than $t_1$ and less than $t_2$. This sequence will continue for all pairs of $t_i$, $\Delta t_i$ that are given in the {schedule()}. If $\Delta t$ is zero or negative, then no maximum time step is enforced (other than hardware limits of the host computer).

**Comments**

The transient analysis calculates the circuit's response over an interval of time beginning with `TIME=0` and finishing at `<final time value>`. Use a `.PRINT` (print) statement to get the results of the transient analysis.

Before calculating the transient response **Xyce** computes a bias point for the circuit that is different from the regular bias point. This is necessary because at the start of a transient analysis, the independent sources can have different values than their DC values. Specifying `NOOP` on the `.TRAN` line causes **Xyce** to begin the transient analysis without performing the usual bias point calculation.

The time integration algorithms within **Xyce** use adaptive time-stepping methods that adjust the time-step size according to the activity in the analysis. The default ceiling for the internal time step is `(<final time value>-<start time value>)/10`. This default ceiling value is automatically adjusted if breakpoints are present, to ensure that there are always at least 10 time steps between breakpoints. If the user specifies a ceiling value, however, it overrides any internally generated ceiling values.

**Xyce** is not strictly compatible with SPICE in its use of the values on the `.TRAN` line. In SPICE, the first number on the `.TRAN` line specifies the printing interval. In **Xyce**, the first number is the `<initial step value>`, which is used in determining the initial step size. The actual initial step size is chosen to be the smallest of three quantities: the `<inital step value>`, the `<step ceiling value>`, or 1/200th of the time until the next breakpoint.

The third argument to `.TRAN` simply determines the earliest time for which results are to be output. Simulation of the circuit always begins at `TIME=0` irrespective of the setting of `<start time value>`.

### 2.1.30 Miscellaneous Commands

#### * (Comment)

A netlist comment line. Whitespace at the beginning of a line is also interpreted as a comment unless it is followed by a + symbol, in which case it treats the line as a continuation.

#### ; (In-line Comment)

Add a netlist in-line comment.

#### + (Line Continuation)

Continue the text of the previous line.

# 2.2 Expressions

**Xyce** supports use of mathematical expressions in several contexts:

- for the values of device instance and model parameters.
- in definition of parameters in `.PARAM` and `.GLOBAL_PARAM` statements.
- for output on `.PRINT` lines.

In all contexts where expressions are allowed, they should be enclosed in braces ({}). For netlist compatibility with other simulators they may be enclosed in single quotation marks instead (`'`), but these are simply replaced with braces at a very early stage of netlist parsing. It is recommended that the braces be used in netlists written specifically for **Xyce**.

The expression package in **Xyce** supports all standard arithmetic operators, trigonometric functions, a collection of arithmetic functions, and some functions to mimic the pulse, sine, exp, and sffm time-dependent functions in the independent current and voltage sources. These functions are listed in tables 2.21 and 2.22.

## Operators

Table 2.20: Operators

| Class of Operator | Operator | Meaning |
|---|---|---|
| arithmetic | + | addition or string concatenation |
| | - | subtraction |
| | * | multiplication |
| | / | division |
| | ** | exponentiation |
| logical[1] | ~ | unary NOT |
| | \| | boolean OR |
| | ^ | boolean XOR |
| | & | boolean AND |
| relational | == | equality |
| | != | non-equality |
| | > | greater-than |
| | >= | greater-than or equal |
| | < | less-than |
| | <= | less-than or equal |

[1] Logical and relational operators are used only with the `IF()` function.

## Arithmetic Functions

Table 2.21: Arithmetic Functions

| Function | Meaning | Explanation |
|---|---|---|
| | ***Arithmetic functions*** | |
| ABS(x) | $\|x\|$ | absolute value of $x$ |
| AGAUSS($\mu$,$\alpha$,$n$) | $\mu - \alpha < result < \mu + \alpha$ | Random number sampled from normal distribution with mean $\mu$ and standard deviation $\alpha/n$<br>The number returned will differ from the mean by at most $\alpha$<br>A deviation $\alpha$ will be $n$ standard deviations from the mean.[1] |
| GAUSS($\mu$,$\alpha$,$n$) | $\mu * (1 - \alpha) < result < \mu * (1 + \alpha)$ | Random number sampled from normal distribution with mean $\mu$ and standard deviation $(\alpha * \mu)/n$<br>The number returned will differ from the mean by at most $\alpha * \mu$<br>A deviation $\alpha * \mu$ will be $n$ standard deviations from the mean.[1] |
| DDT(x) | $\frac{d}{dt}x(t)$ | time derivative of $x$ |
| DDX(f(x),x) | $\frac{\partial}{\partial x}f(x)$ | partial derivative of $f(x)$ with respect to $x$ |
| IF(t,x,y) | $x$ if $t$ is true,<br>$y$ otherwise | $t$ is an expression using the relational operators in Table 2.20.[2] |
| INT(x) | $\mathrm{sgn}(x)\lfloor\|x\|\rfloor$ | integer part of the real variable $x$ |
| LIMIT(x,y,z) | $y$ if $x < y$<br>$x$ if $y < x < z$<br>$z$ if $x > z$ | $x$ limited to range $y$ to $z$ |
| M(x) | $\|x\|$ | absolute value of $x$ |
| MIN(x,y) | $\min(x, y)$ | minimum of $x$ and $y$ |
| MAX(x,y) | $\max(x, y)$ | maximum of $x$ and $y$ |
| PWR(x,y) | $x^y$ | $x$ raised to $y$ power |
| POW(x,y) | $x^y$ | $x$ raised to $y$ power |
| PWRS(x,y) | $x^y$ if $x > 0$<br>0 if $x = 0$<br>$-(-x)^y$ if $x < 0$ | sign corrected $x$ raised to $y$ power |

Table 2.21: Arithmetic Functions

| Function | Meaning | Explanation |
|---|---|---|
| RAND() | $0 < result < 1$ | random number between 0 and 1 sampled from a uniform distribution[1] |
| SDT(x) | $\int x(t)dt$ | time integral of $x$ |
| SGN(x) | +1 if $x > 0$<br>0 if $x = 0$<br>-1 if $x < 0$ | sign value of $x$ |
| SIGN(x,y) | $\mathrm{sgn}(y)\lvert x\rvert$ | sign of $y$ times absolute value of $x$ |
| STP(x) | 1 if $x > 0$<br>0 otherwise | step function |
| SQRT(x) | $\sqrt{x}$ | square root of $x$ |
| TABLE(x,y,z,*) | $f(x)$ where $f(y) = z$ | piecewise linear interpolation, multiple ($y$,$z$) pairs can be specified |
| URAMP(x) | $x$ if $x > 0$<br>0 otherwise | ramp function |
| ***Exponential, logarithmic, and trigonometric functions*** | | |
| ACOS(x) | $\arccos(x)$ | result in radians |
| ACOSH(x) | $\cosh^{-1}(x)$ | hyperbolic arccosine of $x$ |
| ARCTAN(x) | $\arctan(x)$ | result in radians |
| ASIN(x) | $\arcsin(x)$ | result in radians |
| ASINH(x) | $\sinh^{-1}(x)$ | hyperbolic arcsine of $x$ |
| ATAN(x) | $\arctan(x)$ | result in radians |
| ATANH(x) | $\tanh^{-1}(x)$ | hyperbolic arctangent of $x$ |
| ATAN2(x,y) | $\arctan(x/y)$ | result in radians |
| COS(x) | $\cos(x)$ | $x$ in radians |
| COSH(x) | $\cosh(x)$ | hyperbolic cosine of $x$ |
| EXP(x) | $e^x$ | $e$ to the $x$ power |
| LN(x) | $\ln(x)$ | log base $e$ |
| LOG(x) | $\log(x)$ | log base $10$ |
| LOG10(x) | $\log(x)$ | log base $10$ |
| SIN(x) | $\sin(x)$ | $x$ in radians |
| SINH(x) | $\sinh(x)$ | hyperbolic sine of $x$ |
| TAN(x) | $\tan(x)$ | $x$ in radians |
| TANH(x) | $\tanh(x)$ | hyperbolic tangent of $x$ |

## Spice Compatable Functions

Table 2.22: SPICE Compatibility Functions

| Function | Explanation |
|---|---|
| SPICE_EXP(V1,V2,TD1,TAU1,TD2,TAU2) | SPICE style transient exponential<br>V1 = initial value<br>V2 = pulsed value<br>TD1 = rise delay time<br>TAU1 = rise time constant<br>TD2 = fall delay time<br>TAU2 = fall time constant |
| SPICE_PULSE(V1,V2,TD,TR,TF,PW,PER) | SPICE style transient pulse<br>V1 = initial value<br>V2 = pulsed value<br>TD = delay<br>TR = rise time<br>TF = fall time<br>PW = pulse width<br>PER = period |
| SPICE_SFFM(V0,VA,FC,MDI,FS) | SPICE style transient single frequency FM<br>V0 = offset<br>VA = amplitude<br>FC = carrier frequency<br>MDI = modulation index<br>FS = signal frequency |
| SPICE_SIN(V0,VA,FREQ,TD,THETA) | SPICE style transient sine wave<br>V0 = offset<br>VA = amplitude<br>FREQ = frequency (hz)<br>TD = delay<br>THETA = damping factor |

[1]The random number functions `RAND`, `GAUSS`, and `AGAUSS` return a unique number per use in an expression, but once evaluated this number is constant for the entire run, even across `.STEP` iterations.

[2]Use of the `IF` function to create an expression that has step-function-like behavior as a function of a solution variable is highly likely to produce convergence errors in simulation. `IF` statements that have step-like behavior with an explicit time dependence are the exception, as the code will insert breakpoints at the discontinuities. Do not use step-function or other infinite-slope transitions dependent on variables other than time. Smooth the transition so that it is more easily integrated through. See the "Analog Behavioral Modeling" chapter of the **Xyce** Users Guide for guidance on using the `IF` function with the B-source device.

Information about the restrictions on expressions in specific contexts is given in the subsections that follow.

### 2.2.1 Expressions in .PARAM or .GLOBAL_PARAM Statements

Expressions used in .PARAM statements are the most highly constrained. They must evaluate to a constant at the beginning of a run, and therefore must involve only numerical constants and other previously defined .PARAMs. The value of the parameter will be computed when the netlist is parsed, and will replace the name wherever it is used.

**Example:** .PARAM SQUARES=5.0

**Example:** .PARAM SHEETRES=25

**Example:** .PARAM RESISTANCE={SQUARES*SHEETRES}

Global parameters are somewhat less constrained. These parameters are allowed to depend on parameters defined in .PARAMS or .GLOBAL_PARAMS statements, and may contain special variables such as TIME or TEMP. They may not contain any references to solution variables or lead currents.

**Example:** .PARAM dTdt=.01

**Example:** .GLOBAL_PARAM Temperature={27+dTdt*TIME}

### 2.2.2 Expressions in .PRINT Lines

Expressions on .PRINT lines may contain references to parameters defined in either .PARAM or .GLOBAL_PARAM statements, device parameters using the syntax <device name>:<parameter name>, and may also contain solution variables.

```
*example with .print expressions
.PARAM RES=50
R1 1 0 {RES}
V1 1 0 sin(0 5 100khz)
.tran 1u 1m
*Print power dissipated through resistor,
*and actual resistance used in the R1
*device
.print tran {V(1)*V(1)/RES} {R1:R}
.end
```

### 2.2.3 Limitations on Using Complex Values in Expressions

The **Xyce** expression library was not written to work with complex quantities. If AC voltages are used in expressions then the expression library uses only the real part. While the expression library was expanded recently to recognize the various components of complex quantities, such as real and imaginary parts (`VR(A)` and `VI(A)`) or the magnitude and phase (`VM(A)` or `VP(A)`), the arithmetic operators in the **Xyce** expression library only work on real quantities. The following approaches can be used to work around those limitations.

The voltage drop between two nodes `N0` and `N1` can be printed with the two-node variant of the `V()` accessor:

```
.PRINT AC  V(N0,N1)
```

For any other sort of complex arithmetic, the expression must use the real and imaginary parts of the variables in question. An example is as follows, where the real and imaginary parts of the desired quantities are calculated and printed separately:

```
.PRINT AC {VR(N0)-VR(N1)} {VI(N0)-VI(N1)}
+ {VR(N0)*VR(N1)-VI(N0)*VI(N1)} {VR(N0)*VI(N1)+VI(N0)*VR(N1)}
```

instead of:

```
.PRINT AC {V(N0)-V(N1)}  {V(N0)*V(N1)}
```

### 2.2.4 Expressions for Device Instance and Model Parameters

Expressions of constants and `.PARAM` parameters may be used for the values of any device parameters in instance and model lines.

Except in very specific devices, expressions used for device parameter values must evaluate to a time-independent constant, and must not contain dependence on solution variables such as nodal voltages or currents. In these cases, `.GLOBAL_PARAM` parameters may also be used as long as they are not time-dependent.

```
*example of use of expressions for device parameters
.PARAM RES=50
.GLOBAL_PARAM theSaturationCurrent=1.5e-14
R1 1 0 {RES}
V1 1 0 sin(0 5 100khz)
D1 1 0 DMODEL
.MODEL D DMODEL IS=theSaturationCurrent

.step theSaturationCurrent 1e-14 5e-14 1e-14
```

Some parameters of specific devices are exceptions to the general rule. These parameters have no restrictions and may depend on any parameters, time, or solution variables in the netlist:

- The V or I instance parameters of the B source.
- The CONTROL instance parameter of the switch (S device).
- The C (capacitance) instance parameter for the capacitor.
- The coupling coefficient instance parameter for the *LINEAR* mutual inductor (K device with no model card specified)

These specific instance parameters may be time-depdendent (i.e. they may reference the TIME special variable, but may not depend on any solution variables:

- The TEMP instance parameter of all devices.
- The L (inductance) parameter of the inductor.
- The R (resistance) parameter of the resistor.
- The R, RESISTIVITY, DENSITY, HEATCAPACITY and THERMAL_HEATCAPACITY parameters of the thermal resistor (resistor level 2).

### 2.2.5 Special PSpice POLY expression

The POLY keyword, available in the E,F,G, H and B dependent sources, is provided to simplify migration of netlists from PSpice to **Xyce**. POLY provides a compact method of specifying polynomial expressions in which the variables in the polynomial are specified followed by an ordered list of polynomial coefficients. All expressions specified with POLY are ultimately translated by **Xyce** into an equivalent, straightforward polynomial expression in a B source. Since a straightforward polynomial expression can be easier to read, there is no real benefit to using POLY except to support legacy netlists imported from PSpice.

There are three different syntax forms for POLY, which can be a source of confusion. The E and G sources (voltage-dependent voltage or current sources) use one form, the F and H sources (current-dependent voltage or current sources) use a second form, and the B source (general nonlinear source) a third form. During input processing, any of the E,F,G or H sources that use nonlinear expressions are first converted into an equivalent B source, and then any B sources that use the POLY shorthand are further converted into standard polynomial expressions. This section describes how the compact form will be translated into the final form that is used internally.

All three formats of POLY express the same three components: a number of variables involved in the expression ($N$, the number in parentheses after the POLY keyword), the variables themselves, and an ordered list of coefficients for the polynomial terms. Where they differ is in how the variables are expressed.

### Voltage-controlled sources

The E and G sources are both voltage-controlled, and so their POLY format requires specification of two nodes for each voltage on which the source depends, i.e. the positive and negative nodes from which a voltage drop is computed. There must therefore be twice as many nodes as the number of variables specified in parentheses after the POLY keyword:

```
Epoly 1 2 POLY(3) n1p n1m n2p n2m n3p n3m ...
```

In this example, the voltage between nodes 1 and 2 is determined by a polynomial whose variables are V(n1p,n1m), V(n2p,n2m), V(n3p,n3m). Not shown in this example are the polynomial coefficients, which will be described later.

### Current-controlled sources

The F and H sources are both current-controlled, and so their POLY format requires specification of one voltage source name for each current on which the source depends. There must therefore be exactly as many nodes as the number of variables specified in parentheses after the POLY keyword:

```
Fpoly 1 2 POLY(3) V1 V2 V3 ...
```

In this example, the voltage between nodes 1 and 2 is determined by a polynomial whose variables are I(V1), I(V2), and I(V3). Not shown in this example are the polynomial coefficients, which will be described later.

### B sources

Finally, the most general form of POLY is that used in the general nonlinear dependent source, the B source. In this variant, each specific variable must be named explicitly (i.e. not simply by node name or by voltage source name), because currents and voltages may be mixed as needed.

```
Bpoly 1 2 V={POLY(3) I(V1) V(2,3) V(3) ...}

Bpoly2 1 2 I={POLY(3) I(V1) V(2,3) V(3) ...}
```

In these examples, the source between nodes 1 and 2 is determined by a polynomial whose variables are I(V1), V(2,3), and V(3). In the first example, the polynomial value determines the voltage between nodes 1 and 2, and in the second the current.

The E, F, G and H formats are all converted internally in a first step to the B format. Thus the following pairs of sources are exactly equivalent:

```
Epoly 1 2 POLY(3) n1p n1m n2p n2m n3p n3m ...

BEpoly 1 2 V={POLY(3) V(n1p,n1m) V(n2p,n2m) V(n3p,n3m) ...

Fpoly 1 2 POLY(3) V1 V2 V3 ...
```

```
BFpoly 1 2 V={POLY(3) I(V1) I(V2) I(V3) ...
```

After conversion to the B source form, the POLY form is finally converted to a normal expression using the coefficients and variables given.

Coefficients are given in a standard order, and the polynomial is built up by terms until the list of coefficients is exhausted. The first coefficient is the constant term of the polynomial, followed by the coefficients of linear terms, then bi-linear, and so on. For example:

```
Epoly 1 2 POLY(3) n1p n1m n2p n2m n3p n3m 1 .5 .5 .5
```

In this example, the constant term is 1.0, and the coefficients of the three terms linear in the input variables are 0.5. Thus, this E source is precisely equivalent to the general B source:

```
BEstandard 1 2 V={1.0 + .5*V(n1p,n1m) + .5*V(n2p,n2m) +.5*V(n3p,n3m)}
```

The standard ordering for coefficients is:

POLY(N) $X_1 \ldots X_N C_0\ C_1 \ldots C_N\ C_{11} \ldots C_{1N}\ C_{21} \ldots C_{N1} \ldots C_{NN}\ C_{1^21} \ldots C_{1^2N} \ldots$

with the polynomial then being:

$$Value = C_0 + \sum_{j=1}^{N} C_j X_j + \sum_{i=1}^{N} \sum_{j=1}^{N} C_{ij} X_i X_j + \sum_{i=1}^{N} \sum_{j=1}^{N} C_{i^2j} X_i^2 X_j + \ldots$$

Here we have used the general form $X_i$ for the $i^{th}$ variable, which may be either a current or voltage variable in the general case.

It should be reiterated that the POLY format is provided primarily for support of legacy PSpice netlists that use the feature, and that its compactness may be a disadvantage in readability of the netlist and may be more prone to usage error. **Xyce** users are therefore advised that use of the more straightforward expression format in the B source may be more appropriate when crafting original netlists for use in **Xyce**. Since **Xyce** converts POLY format expressions to the simpler format internally, there is no performance benefit to use of POLY.

# 2.3 Devices

**Xyce** supports many devices, with an emphasis on analog devices, including sources, subcircuits and behavioral models. This section serves as a reference for the devices supported by **Xyce**. Each device is described separately and includes the following information, if applicable:

- a description and an example of the correct netlist syntax.
- the matching model types and their description.
- the matching list of model parameters and associated descriptions.
- the corresponding characteristic equations for the model (as required).
- references to publications on which the model is based.

User-defined models may be implemented using the `.MODEL` (model definition) statement, and macromodels can be created as subcircuits using the `.SUBCKT` (subcircuit) statement.

Please note that the characteristic equations are provided to give a general representation of the device behavior. The actual **Xyce** implementation of the device may be slightly different in order to improve, for example, the robustness of the device.

Table 2.23 gives a summary of the device types and the form of their netlist formats. Each of these is described below in detail.

Table 2.23: Analog Device Quick Reference.

| Device Type | Letter | Typical Netlist Format |
|---|---|---|
| Nonlinear Dependent Source (B Source) | B | B<name> <+ node> <- node><br>+ <I or V>={<expression>} |
| Capacitor | C | C<name> <+ node> <- node> [model name] <value><br>+ [IC=<initial value>] |
| Diode | D | D<name> <anode node> <cathode node><br>+ <model name> [area value] |
| Voltage Controlled Voltage Source | E | E<name> <+ node> <- node> <+ controlling node><br>+ <- controlling node> <gain> |
| Current Controlled Current Source | F | F<name> <+ node> <- node><br>+ <controlling V device name> <gain> |
| Voltage Controlled Current Source | G | G<name> <+ node> <- node> <+ controlling node><br>+ <- controlling node> <transconductance> |
| Current Controlled Voltage Source | H | H<name> <+ node> <- node><br>+ <controlling V device name> <gain> |
| Independent Current Source | I | I<name> <+ node> <- node> [[DC] <value>]<br>+ [AC [magnitude value [phase value] ] ]<br>+ [transient specification] |

Table 2.23: Analog Device Quick Reference.

| Device Type | Letter | Typical Netlist Format |
|---|---|---|
| Mutual Inductor | K | K<name> <inductor 1> [<ind. n>*]<br>+ <linear coupling or model> |
| Inductor | L | L<name> <+ node> <- node> [model name] <value><br>+ [IC=<initial value>] |
| JFET | J | J<name> <drain node> <gate node> <source node><br>+ <model name> [area value] |
| MOSFET | M | M<name> <drain node> <gate node> <source node><br>+ <bulk/substrate node> [SOI node(s)]<br>+ <model name> [common model parameter]* |
| Lossy Transmission Line (LTRA) | O | O<name> <A port (+) node> <A port (-) node><br>+ <B port (+) node> <B port (-) node><br>+ <model name> |
| Bipolar Junction Transistor (BJT) | Q | Q<name> <collector node> <base node><br>+ <emitter node> [substrate node]<br>+ <model name> [area value] |
| Resistor | R | R<name> <+ node> <- node> [model name] <value><br>+  [L=<length>] [W=<width>] |
| Voltage Controlled Switch | S | S<name> <+ switch node> <- switch node><br>+ <+ controlling node> <- controlling node><br>+ <model name> |
| Transmission Line | T | T<name> <A port + node> <A port - node><br>+ <B port + node> <B port - node><br>+ <ideal specification> |
| Digital Devices | U | U<name> <type> <digital power node><br>+ <digital ground node> [node]* <model name> |
| Independent Voltage Source | V | V<name> <+ node> <- node> [[DC] <value>]<br>+ [AC [magnitude value [phase value] ] ]<br>+ [transient specification] |
| Subcircuit | X | X<name> [node]* <subcircuit name><br>+ [PARAMS:[<name>=<value>]*] |
| Current Controlled Switch | W | W<name> <+ switch node> <- switch node><br>+ <controlling V device name> <model name> |
| Digital Devices, Y Type (deprecated) | Y<type> | Y<type> <name> [node]* <model name> |
| PDE Devices | YPDE | YPDE <name> [node]* <model name> |
| Accelerated masses | YACC | YACC <name> <acceleration> <velocity> <position><br>+ [x0=<initial position>] [v0=<initial velocity>] |
| Memristor Device | YMEMRISTOR | YMEMRISTOR <name> <+ node> <- node> <model name> |
| MESFET | Z | Z<name> <drain node> <gate node> <source node><br>+ <model name> [area value] |

Table 2.24: Features Supported by Xyce Device Models

| Device | Comments | Branch Current | Power | Analytic Sensi-tivity | Stationary Noise |
|---|---|---|---|---|---|
| Capacitor | Age-aware, semiconductor | Y | Y | Y | |
| Inductor | Coupled mutual inductors (see below) | Y | Y | Y | |
| Linear and Nonlinear Mutual Inductor | | Y | | | |
| Resistor (Level 1) | Normal and Semiconductor | Y | Y | Y | Y |
| Resistor (Level 2) | Thermal Resistor | Y | Y | | |
| Diode (Level 1) | | Y | Y | Y | Y |
| Diode (Level 2) | Addition of PSpice enhancements | Y | Y | | |
| Diode (Level 200) | JUNCAP200 model | Y | Y | Y | Y |
| Independent Voltage Source (VSRC) | | Y | Y | Y | |
| Independent Current Source (ISRC) | | Y | Y | Y | |
| Voltage Controlled Voltage Source (VCVS) | | Y | Y | | |
| Voltage Controlled Current Source (VCCS) | | Y | Y | | |
| Current Controlled Voltage Source (CCVS) | | Y | Y | | |
| Current Controlled Current Source (CCCS) | | Y | Y | | |
| Nonlinear Dependent Source (B Source) | | Y | Y | | |

Table 2.24: Features Supported by Xyce Device Models

| Device | Comments | Branch Current | Power | Analytic Sensi-tivity | Stationary Noise |
|---|---|---|---|---|---|
| Bipolar Junction Transistor (BJT) (Level 1) | | Y | Y | Y | Y |
| Bipolar Junction Transistor (BJT) (Level 10) | Vertical Bipolar Intercompany (VBIC) model, version 1.2 | Y | Y | Y | N |
| Bipolar Junction Transistor (BJT) (Level 11) | Vertical Bipolar Intercompany (VBIC) model, version 1.3 (3-terminal) | Y | Y | Y | Y |
| Bipolar Junction Transistor (BJT) (Level 12) | Vertical Bipolar Intercompany (VBIC) model, version 1.3 (4-terminal) | Y | Y | Y | Y |
| Bipolar Junction Transistor (BJT) (Level 23) | FBH (Ferdinand-Braun-Institut für Höchstfrequenztechnik) HBT model, version 2.1 | Y | Y | Y | N |
| Bipolar Junction Transistor (BJT) (Level 504) | MEXTRAM version 504.12.1 | Y | Y | Y | Y |
| Bipolar Junction Transistor (BJT) (Level 505) | MEXTRAM version 504.12.1 (with self-heating) | Y | Y | Y | Y |
| Junction Field Effect Transistor (JFET) (Level 1) | SPICE-compatible JFET model | Y | Y | | |
| Junction Field Effect Transistor (JFET) (Level 2) | Shockley JFET model | Y | Y | | |
| MESFET | | Y | Y | | |
| MOSFET (Level 1) | | Y | Y | | Y |
| MOSFET (Level 2) | SPICE level 2 MOSFET | Y | Y | | Y |
| MOSFET (Level 3) | | Y | Y | | Y |
| MOSFET (Level 6) | SPICE level 6 MOSFET | Y | Y | | Y |
| MOSFET (Level 9) | BSIM3 model | Y | Y | | Y |

Table 2.24: Features Supported by Xyce Device Models

| Device | Comments | Branch Current | Power | Analytic Sensi-tivity | Stationary Noise |
|---|---|---|---|---|---|
| MOSFET (Level 10) | BSIM SOI model | Y | Y | | |
| MOSFET (Level 14) | BSIM4 model | Y | Y | | |
| MOSFET (Level 18) | VDMOS general model | Y | Y | | |
| MOSFET (Level 77) | BSIM6 model version 6.1.1 | Y | Y | Y | Y |
| MOSFET (Level 102) | Legacy PSP model | Y | Y | Y | Y |
| MOSFET (Level 103) | PSP model | Y | Y | Y | Y |
| MOSFET (Level 107) | BSIM-CMG version 107.0.0 | Y | Y | Y | Y |
| MOSFET (Level 110) | BSIM-CMG version 110.0.0 | Y | Y | Y | Y |
| MOSFET (Level 301) | EKV model version 3.0.1 | Y | Y | Y | Y |
| MOSFET (Level 2000) | MVS ETSOI model version 2.0.0 | Y | Y | Y | Y |
| MOSFET (Level 2001) | MVS HEMT model version 2.0.0 | Y | Y | Y | Y |
| Transmission Line (TRA) | Lossless | Y | Y | | |
| Transmission Line (LTRA) | Lossy | | | | |
| Lumped Transmission Line | Lossy or Lossless | | | | |
| Controlled Switch (S,W) (VSWITCH/ISWITCH) | Voltage or current controlled | Y | Y | | |
| Generic Switch (SW) | Controlled by an expression | Y | Y | | |

Table 2.24: Features Supported by Xyce Device Models

| Device | Comments | Branch Current | Power | Analytic Sensi-tivity | Stationary Noise |
|---|---|---|---|---|---|
| PDE Devices (Level 1) | one-dimensional | Y | | | |
| PDE Devices (Level 2) | two-dimensional | Y | | | |
| Digital (Level 1) | Behavioral Digital | NA | NA | | |
| ACC | Accelerated mass device, used for simulation of electromechanical and magnetically-driven machines | NA | NA | | |
| Power Grid | Separate models for Branch, Bus Shunt, Transformer and Generator Bus. The Generator Bus model supports reactive power (Q) limiting | | | | |
| Memristor | TEAM formulation | Y | Y | | |
| Memristor | Yakopcic | Y | Y | | |

## 2.3.1 Voltage Nodes

Devices in a netlist are connected between *nodes*, and all device types in **Xyce** require at least two nodes on each instance line. Section 2.3.2 lists the characters that are legal and illegal in **Xyce** node and device names.

Except for global nodes (below), voltage node names appearing in a subcircuit that are not listed in the subcircuit's argument list are accessible only to that subcircuit; devices outside the subcircuit cannot connect to local nodes.

### Global nodes

A special syntax is used to designate certain nodes as *global* nodes. Any node whose name starts with the two characters "$G" is a global node, and such nodes are available to be used in any subcircuit. A typical usage of such global nodes is to define a `VDD` or `VSS` signal that all subcircuits need to be able to access, but without having to provide `VSS` and `VDD` input nodes to every subcircuit. In this case, a global `$GVDD` node would be use for the VDD signal.

The node named `0` is a special global node. Node `0` is always ground, and is accessible to all levels of a hierarchical netlist.

### Subcircuit Nodes

Hierarchical netlists may be created using `.SUBCKT` [2.1.28] to define common subcircuit types, and `X` [2.3.30] lines to create instances of those subcircuits. There are two types of nodes associated with such subcircuits, *interface* nodes and *internal* nodes.

Interface nodes are the nodes named on the `.SUBCKT` line. These are effectively local aliases internal to the subcircuit definition for the node names used on the `X` instance lines. Internal nodes are nodes inside the subcircuit definition that are strictly local to that subcircuit. Inside a subcircuit, these node names may be used without restriction in device instance lines and expressions on `B` source lines.

There are some circumstances when it is desirable to access internal nodes of a subcircuit from outside that subcircuit. **Xyce** provides a syntax that allows this to be done in *some* contexts. The primary context in which this is supported is on `.PRINT` lines, to allow the user to print out signals that are usually local to a subcircuit.

The syntax used by **Xyce** to refer to nodes within a subcircuit is to prefix the name of the node with the full path of subcircuit instances in which the node is contained, with colons (:) separating the instance names. So, to reference a node "A" that is inside a subcircuit instance called "Xnot1" inside another subcircuit instance called "Xmain", one would refer to "Xmain:Xnot1:A"

The same syntax works on `.PRINT` lines even if the subcircuit node is one of the interface nodes on the `.SUBCKT` line, but those nodes can also be accessed by using the names of the nodes at the higher level of circuit hierarchy that are used on its instance line.

```
* Netlist file demonstrating subcircuit node access
V1  1   0   1
X1  1   2   demosubc
X2  2   0   demosubc
.subckt demosubc A B
R1 A C 1
R2 C B 1
.ends

.dc V1 1 5 1

*V(X1:A) and V(1) are the same signal.
*V(X1:C) is the internal C node of the X1 instance
*V(X2:C) is the internal C node of the X2 instance
*V(X1:B), V(X2:A) and V(2) are the same signal
.print DC V(X1:C) V(X2:C) V(X1:A) V(1)  V(X1:B) V(X2:A) V(2)
.end
```

Subcircuit nodes may also be accessed from outside of the subcircuit in `B` source voltage or current expressions, though this usage violates the strict hierarchy of the netlist. The one difference between this usage and `.PRINT` usage is that it is not possible to use the subcircuit node syntax to access interface nodes. These must be accessed using the node names being used on the instance line, as in the "V(1)" example in the netlist fragment above.

### 2.3.2 Legal Characters in Node and Device Names

**Xyce** node names and device names can consist of any printable ASCII characters, with the following exceptions and caveats which may be different than other SPICE-like circuit simulators. The exceptions are:

- White space (space, tab, newline) is not allowed.
- Parentheses ("(" or ")"), braces ("{" or "}"), commas, colons, semi-colons, double quotes and single quotes are also not allowed, since they do not work correctly in node names or device names in all netlist contexts in **Xyce**.

The caveats are as follows:

- The star character (*) is allowed in both node names and device names. However, `.PRINT TRAN V(*)` has a special meaning in **Xyce**. So, the single-character node name of * is discouraged.
- Global nodes in **Xyce** begin with the two characters "$G".
- The node named `0` ("zero") is a special global node, which is always the ground node.

### 2.3.3 Lead Currents and Power Calculations

For some devices, such as independent voltage and current sources, the current through that device is a "solution" variable. For other devices, the current through the device is a "lead current", whose value is calculated during a post-processing step. This approach has ramifications in **Xyce** for the availability and accuracy of lead current values. In particular, both lead currents and power calculations need to have been explicitly enabled for a given device, analysis type (e.g., `.AC`) or netlist command (e.g., `.MEASURE`).

For voltage sources, both V and I are solution variables. So, their accuracy is more likely to be limited by the nonlinear solver tolerances (`RELTOL` and `ABSTOL`). The lead current accuracy, for a device like the resistor, can also be limited by the right-hand side tolerance `RHSTOL`. So, the calculated lead currents through very small resistances (e.g., 1e-12) may be inaccurate if the default solver tolerances for **Xyce** are used.

Lead currents have the following additional limitations:

- They are not enabled for `.AC` analyses.
- They are not allowed in the expression controlling a B-Source.
- They do not work for `.RESULT` statements.

Lead currents and power calculations are available in `.MEASURE` and `.FOUR` statements.

At this time the power calculations are only supported for `.DC` and `.TRAN` analysis types and for a limited set of devices. In addition, the results for semiconductor devices (D, J, M, Q and Z devices) and the lossless transmission device (T device) may differ from other simulators. Consult the Features Supported by Xyce Device Models table in section 2.3 and the individual sections on each device for more details.

As an example, the power supplied or dissipated by the voltage source `V` is calculated as $I \cdot \Delta V$ where the voltage drop is calculated as $(V_+ - V_-)$ and positive current flows from $V_+$ to $V_-$. Dissipated power has a positive sign, while supplied power has a negative sign.

An important note is that the power calculations are also a post-processing step, which places a limit on the accuracy of circuit-wide "energy conservation" calculations (e.g., total power supplied by sources - total power dissipated in non-source devices) in **Xyce**. The accuracy of the inputs (`V` and `I`) to the power calculations is limited by the nonlinear solver and right-hand side tolerances, as noted above, and the error in the power calculations is upper-bounded by the sum of the product-terms of `V*(error in I)` and `I*(error in V)`.

## 2.3.4 Capacitor

**Symbol** ⊣⊢

**Instance Form**

```
C<device name> <(+) node> <(-) node> [model name] [value]
+ [device parameters]
```

**Model Form**

```
.MODEL <model name> C [model parameters]
.MODEL <model name> CAP [model parameters]
```

**Examples**

```
CM12 2 4 5.288e-13
CLOAD 1 0 4.540pF IC=1.5V
CFEEDBACK 2 0 CMOD 1.0pF
CAGED 2 3 4.0uF D=0.0233 AGE=86200
```

**Parameters and Options**

`device name`
: The name of the device.

`(+) node`
`(-) node`
: Polarity definition for a positive voltage across the capacitor. The first node is defined as positive. Therefore, the voltage across the component is the first node voltage minus the second node voltage.

`model name`
: If `model name` is omitted, then `value` is the capacitance in farads. If [model name] is given then the value is determined from the model parameters; see the capacitor value formula below.

`value`
: Positional specification of device parameter C (capacitance). Alternately, this can be specified as a parameter, `C=<value>`, or in the (optional) model.

`device parameters`
: Parameters listed in Table 2.25 may be provided as space separated `<parameter>=<value>` specifications as needed. Any number of parameters may be specified.

`model parameters`
: Parameters listed in Table 2.26 may be provided as space separated `<parameter>=<value>` specifications as needed. Any number of parameters may be specified.

**Comments**

Positive current flows through the capacitor from the `(+)` node to the `(-)` node. In general, capacitors should have a positive capacitance value (`<value>` property). In all cases, the capacitance must not be zero.

However, cases exist when a negative capacitance value may be used. This occurs most often in filter designs that analyze an RLC circuit equivalent to a real circuit. When transforming from the real to the RLC equivalent, the result may contain a negative capacitance value.

In a transient run, negative capacitance values may cause the simulation to fail due to instabilities they cause in the time integration algorithms.

The power stored or released from the capacitor is calculated with $I \cdot \Delta V$ where the voltage drop is calculated as $(V_+ - V_-)$ and positive current flows from $V_+$ to $V_-$.

For compatibility with PSpice, either `C` or `CAP` can be used in a `.MODEL` statement for a capacitor.

## Device Parameters

Table 2.25: Capacitor Device Instance Parameters

| Parameter | Description | Units | Default |
|---|---|---|---|
| `AGE` | Age of capacitor | hour | 0 |
| `C` | Capacitance | F | 1e-06 |
| `D` | Age degradation coefficient | – | 0.0233 |
| `IC` | Initial voltage drop across device | V | 0 |
| `L` | Semiconductor capacitor width | m | 1 |
| `TC1` | Linear Temperature Coefficient | $^\circ C^{-1}$ | 0 |
| `TC2` | Quadratic Temperature Coefficient | $^\circ C^{-2}$ | 0 |
| `TEMP` | Device temperature | $^\circ C$ | Ambient Temperature |
| `W` | Semiconductor capacitor length | m | 1e-06 |

In addition to the parameters shown in the table, the capacitor supports a vector parameter for the temperature correction coefficients. `TC1=<linear coefficient>` and `TC2=<quadratic coefficient>` may therefore be specified compactly as `TC=<linear coefficient>,<quadratic coefficient>`.

## Model Parameters

Table 2.26: Capacitor Device Model Parameters

| Parameter | Description | Units | Default |
|---|---|---|---|
| `C` | Capacitance multiplier | – | 1 |
| `CJ` | Junction bottom capacitance | F/m$^2$ | 0 |
| `CJSW` | Junction sidewall capacitance | F/m | 0 |
| `DEFW` | Default device width | m | 1e-06 |
| `NARROW` | Narrowing due to side etching | m | 0 |
| `TC1` | Linear temperature coefficient | °C$^{-1}$ | 0 |
| `TC2` | Quadratic temperature coefficient | °C$^{-2}$ | 0 |
| `TNOM` | Nominal device temperature | °C | Ambient Temperature |

## Capacitor Equations

Capacitance Value Formula

If `[model name]` is specified, then the capacitance is given by:

$$\mathbf{C} \cdot (1 + \mathbf{TC1} \cdot (T - T_0) + \mathbf{TC2} \cdot (T - T_0)^2)$$

where `C` is the base capacitance specified on the device line and is normally positive (though it can be negative, but not zero). $T_0$ is the nominal temperature (set using $\mathbf{TNOM}$ option).

Age-aware Formula

If $\mathbf{AGE}$ is given, then the capacitance is:

$$\mathbf{C}[1 - \mathbf{D} \log(\mathbf{AGE})]$$

Semiconductor Formula

If `[model name]` and $\mathbf{L}$ and $\mathbf{W}$ are given, then the capacitance is:

$$\mathbf{CJ}(\mathbf{L} - \mathbf{NARROW})(\mathbf{W} - \mathbf{NARROW}) + 2 \cdot \mathbf{CJSW}(\mathbf{L} - \mathbf{W} + 2 \cdot \mathbf{NARROW})$$

## 2.3.5 Inductor

**Symbol**

**Instance Form**

```
L<name> <(+) node> <(-) node> [model] <value> [device parameters]
```

**Model Form**

```
.MODEL <model name> L [model parameters]
.MODEL <model name> IND [model parameters]
```

**Examples**

```
L1 1 5 3.718e-08
LLOAD 3 6 4.540mH IC=2mA
Lmodded 3 6 indmod 4.540mH
.model indmod L (L=.5 TC1=0.010 TC2=0.0094)
```

**Parameters and Options**

`(+) node`
`(-) node`
: Polarity definition for a positive voltage across the inductor. The first node is defined as positive. Therefore, the voltage across the component is the first node voltage minus the second node voltage.

`initial value`
: The initial current through the inductor during the bias point calculation.

**Comments**

In general, inductors should have a positive inductance value. The inductance must not be zero.

However, cases exist when a negative value may be used. This occurs most often in filter designs that analyze an RLC circuit equivalent to a real circuit. When transforming from the real to the RLC equivalent, the result may contain a negative inductance value.

The power stored or released from the inductor is calculated with $I \cdot \Delta V$ where the voltage drop is calculated as $(V_+ - V_-)$ and positive current flows from $V_+$ to $V_-$.

If a model name is given, the inductance is modified from the value given on the instance line by the parameters in the model card. See “Inductance Value Formula” below.

When an inductor is named in the list of coupled inductors in a mutual inductor device line (see page 133) , and that mutual inductor is of the nonlinear-core type, the `<value>` is interpreted as a number of turns rather than as an inductance in Henries.

For compatibility with PSpice, either `L` or `IND` can be used in a `.MODEL` statement for an inductor.

## Device Parameters

Table 2.27: Inductor Device Instance Parameters

| Parameter | Description | Units | Default |
|---|---|---|---|
| IC | Initial current through device | A | 0 |
| L | Inductance | henry | 0 |
| TC1 | Linear Temperature Coefficient | $^\circ C^{-1}$ | 0 |
| TC2 | Quadratic Temperature Coefficient | $^\circ C^{-2}$ | 0 |
| TEMP | Device temperature | °C | Ambient Temperature |

## Model Parameters

Table 2.28: Inductor Device Model Parameters

| Parameter | Description | Units | Default |
|---|---|---|---|
| IC | Initial current through device | A | 0 |
| L | Inductance Multiplier | – | 1 |
| TC1 | First order temperature coeff. | $^\circ C^{-1}$ | 0 |
| TC2 | Second order temperature coeff. | $^\circ C^{-2}$ | 0 |
| TNOM | Reference temperature | °C | 27 |

In addition to the parameters shown in the table, the inductor supports a vector parameter for the temperature correction coefficients. TC1=<linear coefficient> and TC2=<quadratic coefficient> may therefore be specified compactly as TC=<linear coefficient>,<quadratic coefficient>.

## Inductor Equations

Inductance Value Formula

If [model name] is specified, then the inductance is given by:

$$\mathbf{L}_{base} \cdot \mathbf{L} \cdot (1 + \mathbf{TC1} \cdot (T - T_0) + \mathbf{TC2} \cdot (T - T_0)^2)$$

where $\mathbf{L}_{base}$ is the base inductance specified on the device line and is normally positive (though it can be negative, but not zero). $\mathbf{L}$ is the inductance multiplier specified in the model card. $T_0$ is the nominal temperature (set using $\mathbf{TNOM}$ option).

## 2.3.6 Mutual Inductors

**Symbol**

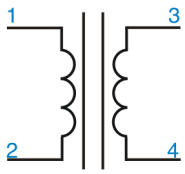


**Instance Form**

```
K<name> L<inductor name> [L<inductor name>*]
+ <coupling value> [model name]
```

**Model Form**

```
.MODEL <model name> CORE [model parameters]
```

**Examples**

```
ktran1 l1 l2 l3 1.0
KTUNED L3OUT  L4IN .8
KTRNSFRM LPRIMARY LSECNDRY 1
KXFRM L1 L2  L3  L4 .98 KPOT_3C8
```

**Parameters and Options**

`inductor name`

Identifies the inductors to be coupled. The inductors are coupled and in the dot notation the dot is placed on the first node of each inductor. The polarity is determined by the order of the nodes in the L devices and not by the order of the inductors in the K statement.

If more than two inductors are given on a single K line, each inductor is coupled to all of the others using the same coupling value.

`coupling value`

The coefficient of mutual coupling, which must be between $-1.0$ and $1.0$.

This coefficient is defined by the equation

`<coupling value>` = $\frac{M_{ij}}{\sqrt{L_i L_j}}$

where

$L_i$ is the inductance of the $i$th named inductor in the K-line

$M_{ij}$ is the mutual inductance between $L_i$ and $L_j$

For transformers of normal geometry, use $1.0$ as the value. Values less than $1.0$ occur in air core transformers when the coils do not completely overlap.

`model name`

If `model name` is present, four things change:

- The mutual coupling inductor becomes a nonlinear, magnetic core device.

- The inductors become windings, so the number specifying inductance now specifies the number of turns.
- The list of coupled inductors could be just one inductor.
- If two or more inductors are listed, each inductor is coupled to all others through the magnetic core.
- A model statement is required to specify the model parameters.

## Model Parameters

Table 2.29: Nonlinear Mutual Inductor Device Model Parameters

| Parameter | Description | Units | Default |
|---|---|---|---|
| A | Thermal energy parameter | A/m | 1000 |
| ALPHA | Domain coupling parameter | – | 5e-05 |
| AREA | Mean magnetic cross-sectional area | $cm^2$ | 0.1 |
| BETAH | Modeling constant | – | 0.0001 |
| BETAM | Modeling constant | – | 3.125e-05 |
| BHSIUNITS | Flag to report B and H in SI units | – | 0 |
| C | Domain flexing parameter | – | 0.2 |
| CLIM | Value below which domain flexing parameter will be treated as zero. | – | 0.005 |
| CONSTDELVSCALING | Use constant scaling factor to smooth voltage difference over first inductor | V | false |
| DELVSCALING | Smoothing coefficient for voltage difference over first inductor | V | 1000 |
| FACTORMS | Flag to save state variables | – | 0 |
| GAP | Effective air gap | cm | 0 |
| INCLUDEMEQU | Flag to include the magnetics in the solution. | – | true |
| K | Domain anisotropy parameter | A/m | 500 |
| KIRR | Domain anisotropy parameter | A/m | 500 |
| LEVEL | for pspice compatibility – ignored | – | 0 |
| MEQNSCALING | M-equation scaling | – | 1 |
| MS | Saturation magnetization | A/m | 1e+06 |
| MVARSCALING | M-variable scaling. | – | 1 |
| OUTPUTSTATEVARS | Flag to save state variables | – | 0 |
| PACK | for pspice compatibility – ignored | – | 0 |
| PATH | Total mean magnetic path | cm | 1 |
| PZEROTOL | Tolerance for nonlinear zero crossing | – | 0.1 |
| REQNSCALING | R-equation scaling | – | 1 |
| RVARSCALING | R-variable scaling | – | 1 |

Table 2.29: Nonlinear Mutual Inductor Device Model Parameters

| Parameter | Description | Units | Default |
|---|---|---|---|
| TC1 | First order temperature coeff. | – | 0 |
| TC2 | Second order temperature coeff. | – | 0 |
| TNOM | Reference temperature | °C | 27 |

Note that **Xyce**'s default value for the GAP parameter as zero. Some simulators will use non-zero values of the GAP as a default. When using netlists from other simulators in **Xyce**, ensure that the default parameters are consistent.

Special Notes

The coupling coefficient of the linear mutual inductor (i.e. a mutual inductor without a core model) is permitted to be a time- or solution variable-dependent expression. This is intended to allow simulation of electromechnical devices in which there might be moving coils that interact with fixed coils.

Additionally, for linear mutual inductors, different coupling terms can be applied to different pairs of inductors with this syntax:

```
L1 1 2 2.0e-3
L2 0 3 8.1e-3
L3 3 4 8.1e-3
ktran1 l1 l2 0.7
ktran2 l2 l3 0.9
ktran3 l1 l3 0.99
```

Nonlinear mutual inductors can output $B(t)$ and $H(t)$ variables so that one can plot $B - H$ loops. On the `.print` line the $B$ and $H$ variables are accessible using the node output syntax as in `n( non-linear-inductor-name_b )` for $B$ and `n( non-linear-inductor-name_h )` for $H$. A confusing aspect of this is that the non-linear inductor name is the *internal* name used by **Xyce**. For example, consider this circuit which defines a nonlinear mutual inductor at both the top level of the circuit and within a subcircuit:

```
* Test Circuit for Mutually Coupled Inductors

VS 0 1 SIN(0 169.7 60HZ)
R1 1 2 1K
R2 3 0 1K
L1 2 0 10
L2 3 0 20
K1 L1 L2 0.75 txmod
.model txmod core
```

```
.subckt mysub n1 n2 n3
r1s n1 n2 1000
r2s n3 0  1000
L1s n2 0  10
L2s n3 0  20
k1s L1s L2s 0.75 txmod
.ends

xtxs 1 4 5 mysub

.TRAN 100US 25MS

* output the current through each inductor and the B & H values.
.PRINT TRAN I(L1) I(L2) n(ymin!k1_b)  n(ymin!k1_h)
+ I(xtxs:L1s)  I(xtxs:l2s) n(xtxs:ymin!k1s_b) n(xtxs:ymin!k1s_h)

.END
```

The internal, **Xyce** name of the non-linear mutual inductor is `YMIN!K1` or `ymin!k1` as the name is not case-sensitive. The device `k1s` is declared within a subcircuit called `xtxs`. Thus, its full name is `xtxs:ymin!k1s`. The reason for this is that both the linear and non-linear mutual inductors are devices that are collections of other devices, inductors in this case. Rather than use one of the few remaining single characters left to signify a new device, **Xyce** uses `Y` devices as an indicator of a extended device set, where the characters after the `Y` denote the device type and then the device name. Here, `ymin` means a `min` device which is a *mutual-inductor, non-linear* device. Thus, to print the $B$ or $H$ variable of the non-linear mutual inductor called `k1` one would use `n(ymin!k1_b)` and `n(ymin!k1_h)` respectively for a `.print` line that looks like this:

```
.PRINT TRAN I(L1) I(L2) n(ymin!k1_b)  n(ymin!k1_h)
```

And if the mutual inductor is in a subcircuit called `xtxs` then the `.print` line would look like this:

```
.PRINT TRAN I(xtxs:L1s)  I(xtxs:l2s) n(xtxs:ymin!k1s_b) n(xtxs:ymin!k1s_h)
```

The above example also demonstrates how one outputs the current through inductors that are part of mutual inductors. The syntax is `I( inductor name )`.

Note that while MKS units are used internally in **Xyce**, $B$ and $H$ are output by default in the SI units of Gauss for $B$ and Oersted for $H$. To convert $B$ to units of Tesla divide **Xyce**'s output by $10,000$. To convert $H$ to units of $A/m$ divide **Xyce**'s output by $4\pi/1000$. Additionally, one can set the `.model CORE` parameter `BHSIUNITS` to 1 to force $B$ and $H$ to be output in MKS units.

Finally, one can access the $B$ and $H$ data via the `.model CORE` line. On the nonlinear mutual inductor's `.model` line, set the option `OUTPUTSTATEVARS=1`. This will cause **Xyce** to create

a unique file for each nonlinear mutual inductor that uses this `.model` line with a name of the form `Inductor_`device_name. There are five columns of data in this file: time ($t$), magnetic moment ($M$), total current flux ($R$), flux density ($B$) and magnetic field strength ($H$). As with data output on the `.print` line, SI units are used such that $B$ is output with units of Gauss and $H$ in Oersted. As mentioned earlier, setting the model flag `BHSIUNITS` to 1 causes the output of $B$ and $H$ uses MKS units of Tesla and $A/m$ respectively.

Mutual Inductor Equations

The voltage to current relationship for a set of linearly coupled inductors is:

$$V_i = \sum_{j=1}^{N} c_{ij} \sqrt{L_i L_j} \frac{dI_j}{dt} \tag{2.1}$$

Here, $V_i$ is the voltage drop across the $i$th inductor in the coupled set. The coupling coefficient between a pair of inductors is $c_{ij}$ with a value typically near unity and $L$ is the inductance of a given inductor which has units of *Henry's* (1 Henry $= 1H = Volt \cdot s/Amp$)

For nonlinearly coupled inductors, the above equation is expanded to the form:

$$V_i = \left[1 + \left(1 - \frac{\ell_g}{\ell_t}\right) P(M, I_1 ... I_N)\right] \sum_{j=1}^{N} Lo_{ij} \frac{dI_j}{dt} \tag{2.2}$$

This is similar in form to the linearly coupled inductor equation. However, the coupling has become more complicated as it now depends on the magnetic moment created by the current flow, $M$. Additionally, there are geometric factors, $\ell_g$ and $\ell_t$ which are the effective air gap and total mean magnetic path for the coupled inductors. The matrix of terms, $Lo_{ij}$ is defined as

$$Lo_{ij} = \frac{\mu_0 A_c N_i N_j}{\ell_t} \tag{2.3}$$

and it represents the physical coupling between inductors $i$ and $j$. In this expression, $N_i$ is the number of windings around the core of inductor $i$, $\mu_0$ is the magnetic permeability of free space which has units of Henries per meter and a value of $4\pi \times 10^{-7}$ and $A_c$ is the mean magnetic cross-sectional area.

The magnetic moment, $M$ is defined by:

$$\frac{dM}{dt} = \frac{1}{\ell_t} P \sum_{i=1}^{N} N_i \frac{dI_i}{dt} \tag{2.4}$$

and the function $P$ is defined as:

$$P = \frac{cM'_{an} + (1-c)M'_{irr}}{1 + \left(\frac{\ell_g}{\ell_t} - \alpha\right) cM'_{an} + \frac{\ell_g}{\ell_t}(1-c)M'_{irr}} \tag{2.5}$$

If $c <$ CLIM, then $c$ is treated as zero in the above equation and **Xyce** simplifies the formulation. In this case, the magnetic-moment equation will not be needed and it will be be dropped form the formulation. One can controll this behavior by modifying the value of CLIM.

The remaining functions are:

$$M'_{an} = \frac{M_s A}{(A + |H_e|)^2} \tag{2.6}$$

$$H_e = H + \alpha M \tag{2.7}$$

$$H = H_{app} - \frac{\ell_g}{\ell_t} M \tag{2.8}$$

$$H_{app} = \frac{1}{\ell_t} \sum_{i=1}^{N} N_i I_i \tag{2.9}$$

$$M'_{irr} = \frac{\Delta M sgn(q) + |\Delta M|}{2\left(K_{irr} - \alpha|\Delta M|\right)} \tag{2.10}$$

$$\Delta M = M_{an} - M \tag{2.11}$$

$$M_{an} = \frac{M_s H_e}{A + |H_e|} \tag{2.12}$$

$$q = \text{DELVSCALING}\Delta V \tag{2.13}$$

**Xyce** dynamically modifies DELVSCALING to be $1000/$ Maximum Voltage Drop over the first inductor. This typically produces accurate results for both low voltage and high voltage applicaitons. However, it is possible to use a fixed scaling by setting the model parameter CONSTDELVSCALING to true and then setting DELVSCALING to the desired scaling value.

In **Xyce**'s formulation, we define $R$ as:

$$R = \frac{dH_{app}}{dt} = \frac{1}{\ell_t} \sum_{i=1}^{N} N_i \frac{dI_i}{dt} \tag{2.14}$$

This simplifies the $M$ equation to:

$$\frac{dM}{dt} = PR \tag{2.15}$$

**Xyce** then solves for the additional variables $M$ and $R$ when modeling a nonlinear mutual inductor device.

B-H Loop Calculations

To calculate $B$-$H$ loops, $H$ is used as defined above and $B$ is a derived quantity calculated by:

$$B = \mu_0 \left(H + M\right) \tag{2.16}$$

$$= \mu_0 \left[H_{app} + \left(1 - \frac{\ell_g}{\ell_t}\right) M\right] \tag{2.17}$$

Converting Nonlinear to Linear Inductor Models

At times one may have a model for nonlinear mutual inductor, but wish to use a simpler linear model in a given circuit. To convert a non-linear model to an equivalent linear form, one can start by equating the coupling components of equations 2.1 and 2.2 as:

$$c_{ij}\sqrt{L_i L_j} = \left[1 + \left(1 - \frac{\ell_g}{\ell_t}\right) P(M, I_1 ... I_N)\right] Lo_{ij} \tag{2.18}$$

In the above relationship, $i$ and $j$ represent the $i$th and $j$th inductors. Since we would like to equate the $i$th inductor's nonliner properties to its linear properties, we will substitute $i \rightarrow j$ and simplify assuming steady state where $d/dt = 0$ and $M(t) = 0$.

$$L_i = \frac{1}{c_{ii}} \left\{ 1 + \left(1 - \frac{\ell_g}{\ell_t}\right) \left[ \frac{c\frac{Ms}{A}}{1 + \left(\frac{\ell_g}{\ell_t} - \alpha\right)\frac{Ms}{A}} \right] \right\} \frac{\mu A_c}{\ell_t} N_i^2 \tag{2.19}$$

In the above equatin, $c_{ii}$ represents the coupling coefficient between the $i$th inductor with itself. This will likely be $1$ unless there are very unusual geometry considerations. Note, that the terms $A$, $Ms$, $A_c$, $\mu$, $\ell_g$ and $\ell_t$ all have units of length within them and must use the same unit for this relationship to be valid. Specifically, $\mu$ has units of Henery's per meter and $A$ and $Ms$ have units of Amps per meter. $A_c$, $\ell_g$ and $\ell_p$ have units of length$^2$ and length respectively, but the length unit used in the model statement is $cm^2$ and $cm$ respectively. Thus, one must use consistent units such as meters for $A_c$, $\ell_g$ and $\ell_p$ in equation 2.19 for a valid inductance approximation.

## 2.3.7 Resistor

**Symbol**

**Instance Form**

```
R<name> <(+) node> <(-) node> [model name] [value] [device parameters]
```

**Model Form**

```
.MODEL <model name> R [model parameters]
.MODEL <model name> RES [model parameters]
```

**Examples**

```
R1 1 2 2K TEMP=27
RLOAD 3 6 RTCMOD 4.540 TEMP=85
.MODEL RTCMOD R (TC1=.01 TC2=-.001)
RSEMICOND 2 0 RMOD L=1000u W=1u
.MODEL RMOD R (RSH=1)
```

**Parameters and Options**

`(+) node`
`(-) node`
: Polarity definition for a positive voltage across the resistor. The first node is defined as positive. Therefore, the voltage across the component is the first node voltage minus the second node voltage. Positive current flows from the positive node (first node) to the negative node (second node).

`model name`
: If `[model name]` is omitted, then `[value]` is the resistance in Ohms. If `[model name]` is given then the resistance is determined from the model parameters; see the resistance value formula below.

`value`
: Positional specification of device parameter R (resistance). Alternately, this can be specified as a parameter, `R=<value>`, or in the (optional) model.

`device parameters`
: Parameters listed in Table 2.30 may be provided as space separated `<parameter>=<value>` specifications as needed. Any number of parameters may be specified.

**Comments**

Resistors must have a positive (nonzero) resistance value (R).

The power dissipated in the resistor is calculated with $I \cdot \Delta V$ where the voltage drop is calculated as $(V_+ - V_-)$ and positive current flows from $V_+$ to $V_-$. The power accessors (`P()` and `W()`) are supported for both the level 1 resistor and the level 2 (thermal) resistor.

For compatibility with PSpice, either `R` or `RES` can be used in a `.MODEL` statement for a resistor.

## Device Parameters

Table 2.30: Resistor Device Instance Parameters

| Parameter | Description | Units | Default |
|---|---|---|---|
| DTEMP | Device Temperature – For compatibility only. Parameter is NOT used | °C | 0 |
| L | Length | m | 0 |
| R | Resistance | Ω | 1000 |
| TC1 | Linear Temperature Coefficient | $°C^{-1}$ | 0 |
| TC2 | Quadratic Temperature Coefficient | $°C^{-2}$ | 0 |
| TEMP | Device temperature | °C | Ambient Temperature |
| W | Width | m | 0 |

In addition to the parameters shown in the table, the resistor supports a vector parameter for the temperature correction coefficients. TC1=<linear coefficient> and TC2=<quadratic coefficient> may therefore be specified compactly as TC=<linear coefficient>,<quadratic coefficient>.

## Model Parameters

Table 2.31: Resistor Device Model Parameters

| Parameter | Description | Units | Default |
|---|---|---|---|
| DEFW | Default Instance Width | m | 1e-05 |
| NARROW | Narrowing due to side etching | m | 0 |
| R | Resistance Multiplier | – | 1 |
| RSH | Sheet Resistance | Ω | 0 |
| TC1 | Linear Temperature Coefficient | $°C^{-1}$ | 0 |
| TC2 | Quadratic Temperature Coefficient | $°C^{-2}$ | 0 |
| TNOM | Parameter Measurement Temperature | °C | Ambient Temperature |

Note: There is no model parameter for Default Instance Length. The use of the semiconductor resistor model requires the user to specify a non-zero value for the instance parameter L.

## Resistor Equations

Resistance Value Formula

If `[model name]` is included, then the resistance is:

$$\mathbf{R} \cdot (1 + \mathbf{TC1} \cdot (T - T_0) + \mathbf{TC2} \cdot (T - T_0)^2)$$

If $\mathbf{L}$ and $\mathbf{W}$ are given, the resistance is:

$$\mathbf{RSH} \frac{[\mathbf{L} - \mathbf{NARROW}]}{[\mathbf{W} - \mathbf{NARROW}]}$$

## Thermal (level=2) Resistor

**Xyce** supports a thermal resistor model, which is associated with level=2.

## Thermal Resistor Instance Parameters

Table 2.32: Resistor Device Instance Parameters

| Parameter | Description | Units | Default |
|---|---|---|---|
| `A` | Area of conductor | $m^2$ | 0 |
| `DENSITY` | Resistor material density (unused) | kg/$m^3$ | 0 |
| `HEATCAPACITY` | Resistor material volumetric heat capacity | $J/(m^3K)$ | 0 |
| `L` | Length of conductor | m | 0 |
| `OUTPUTINTVARS` | Debug Output switch | – | false |
| `R` | Resistance | Ω | 1000 |
| `RESISTIVITY` | Resistor material resistivity | Ω m | 0 |
| `TEMP` | Device temperature | °C | Ambient Temperature |
| `THERMAL_A` | Area of material thermally coupled to conductor | $m^2$ | 0 |
| `THERMAL_HEATCAPACITY` | Volumetric heat capacity of material thermally coupled to conductor | $J/(m^3K)$ | 0 |
| `THERMAL_L` | Length of material thermally coupled to conductor | m | 0 |
| `W` | Width of conductor | m | 0 |

## Thermal Resistor Model Parameters

Table 2.33: Resistor Device Model Parameters

| Parameter | Description | Units | Default |
|---|---|---|---|
| DEFW | Default Instance Width | m | 1e-05 |
| DENSITY | Resistor material density (unused) | kg/m$^3$ | 0 |
| HEATCAPACITY | Resistor material volumetric heat capacity | $J/(\mathrm{m}^3\mathrm{K})$ | 0 |
| NARROW | Narrowing due to side etching | m | 0 |
| R | Resistance Multiplier | – | 1 |
| RESISTIVITY | Resistor material resistivity | Ω m | 0 |
| RSH | Sheet Resistance | Ω | 0 |
| TC1 | Linear Temperature Coefficient | $^\circ\mathrm{C}^{-1}$ | 0 |
| TC2 | Quadratic Temperature Coefficient | $^\circ\mathrm{C}^{-2}$ | 0 |
| THERMAL_HEATCAPACITY | Volumetric heat capacity of material thermally coupled to conductor | $J/(\mathrm{m}^3\mathrm{K})$ | 0 |
| TNOM | Nominal device temperature | °C | Ambient Temperature |

## 2.3.8 Diode

**Symbol**

**Instance Form**

```
D<name> <(+) node> <(-) node> <model name> [area value]
```

**Model Form**

```
.MODEL <model name> D [model parameters]
```

**Examples**

```
DCLAMP 1 0 DMOD
D2 15 17 SWITCH 1.5
```

**Parameters and Options**

`(+) node`
`(-) node`
: The anode and the cathode.

`area value`
: Scales IS, ISR, IKF, RS, CJO, and IBV, and has a default value of 1. IBV and BV are both specified as positive values.

**Comments**

The diode is modeled as an ohmic resistance (`RS/area`) in series with an intrinsic diode. Positive current is current flowing from the anode through the diode to the cathode.

The power through the diode is calculated with $I \cdot \Delta V$ where the voltage drop is calculated as $(V_+ - V_-)$ and positive current flows from $V_+$ to $V_-$. This formula may differ from other simulators, such as HSpice.

### Diode Operating Temperature

Model parameters can be assigned unique measurement temperatures using the $\mathbf{TNOM}$ model parameter.

### Diode level selection

Three distinct implementations of the diode are available. These are selected by using the `LEVEL` model parameter. The default implementation is based on SPICE 3F5, and may be explicitly specified using `LEVEL=1` in the model parameters, but is also selected if no `LEVEL` parameter is specified. The PSpice implementation [2] is obtained by specifying `LEVEL=2`. The **Xyce** `LEVEL=200` diode is the JUNCAP200 model.

The **Xyce** `LEVEL=1` and `LEVEL=2` diodes have a parameter, $\mathbf{IRF}$, that allows the user to adjust the reverse current from the basic SPICE implementation. The usual SPICE treatment defines the linear portion of the reverse current in terms of IS which is defined by the forward current characteristics. Data shows that often the reverse current is quite far off when determined in this

manner. The parameter $\mathbf{IRF}$ is a multiplier that can be applied to adjust the linear portion of the reverse current.

## Level 1 and 2 Diode Instance Parameters

Table 2.34: Diode Device Instance Parameters

| Parameter | Description | Units | Default |
|---|---|---|---|
| AREA | Area scaling value (scales IS, ISR, IKF, RS, CJ0, and IBV) | – | 1 |
| IC | | – | 0 |
| LAMBERTW | Option to solve diode equations with the Lambert-W function | logical (T/F) | 0 |
| OFF | Initial voltage drop across device set to zero | logical (T/F) | 0 |
| TEMP | Device temperature | – | Ambient Tempera-ture |

## Level 1 and 2 Diode Model Parameters

Table 2.35: Diode Device Model Parameters

| Parameter | Description | Units | Default |
|---|---|---|---|
| AF | Flicker noise exponent | – | 1 |
| BV | Reverse breakdown ”knee” voltage | V | 1e+99 |
| CJ | Zero-bias p-n depletion capacitance | F | 0 |
| CJO | Zero-bias p-n depletion capacitance | F | 0 |
| CJO | Zero-bias p-n depletion capacitance | F | 0 |
| EG | Bandgap voltage (barrier height) | eV | 1.11 |
| FC | Forward-bias depletion capacitance coefficient | – | 0.5 |
| IBV | Reverse breakdown ”knee” current | A | 0.001 |
| IBVL | Low-level reverse breakdown ”knee” current (level 2) | A | 0 |
| IKF | High-injection ”knee” current (level 2) | A | 0 |
| IRF | Reverse current fitting factor | – | 1 |
| IS | Saturation current | A | 1e-14 |
| ISR | Recombination current parameter (level 2) | A | 0 |
| JS | Saturation current | A | 1e-14 |
| KF | Flicker noise coefficient | – | 0 |
| M | Grading parameter for p-n junction | – | 0.5 |
| N | Emission coefficient | – | 1 |
| NBV | Reverse breakdown ideality factor (level 2) | – | 1 |
| NBVL | Low-level reverse breakdown ideality factor (level 2) | – | 1 |

Table 2.35: Diode Device Model Parameters

| Parameter | Description | Units | Default |
|---|---|---|---|
| NR | Emission coefficient for ISR (level 2) | – | 2 |
| RS | Parasitic resistance | Ω | 0 |
| TBV1 | BV temperature coefficient (linear) (level 2) | $^{\circ}C^{-1}$ | 0 |
| TBV2 | BV temperature coefficient (quadratic) (level 2) | $^{\circ}C^{-2}$ | 0 |
| TIKF | IKF temperature coefficient (linear) (level 2) | $^{\circ}C^{-1}$ | 0 |
| TNOM | | – | Ambient Tempera-ture |
| TRS1 | RS temperature coefficient (linear) (level 2) | $^{\circ}C^{-1}$ | 0 |
| TRS2 | RS temperature coefficient (quadratic) (level 2) | $^{\circ}C^{-2}$ | 0 |
| TT | Transit time | s | 0 |
| VB | Reverse breakdown ”knee” voltage | V | 1e+99 |
| VJ | Potential for p-n junction | V | 1 |
| XTI | IS temperature exponent | – | 3 |

The JUNCAP200 model has the instance and model parameters in the tables below. Complete documentation of JUNCAP200 may be found at `http://www.cea.fr/cea-tech/leti/pspsupport/Documents/juncap200p5_summary.pdf`.

## JUNCAP200 Instance Parameters

Table 2.36: JUNCAP200 Diode Device Instance Parameters

| Parameter | Description | Units | Default |
|---|---|---|---|
| AB | Junction area | $m^2$ | 1e-12 |
| LG | Gate-edge part of junction perimeter | $m^2$ | 1e-06 |
| LS | STI-edge part of junction perimeter | $m^2$ | 1e-06 |
| M | Alias for MULT | — | 1 |
| MULT | Number of devices in parallel | — | 1 |

## JUNCAP200 Model Parameters

Table 2.37: JUNCAP200 Diode Device Model Parameters

| Parameter | Description | Units | Default |
|---|---|---|---|
| CBBTBOT | Band-to-band tunneling prefactor of bottom component | $A/V^3$ | 1e-12 |
| CBBTGAT | Band-to-band tunneling prefactor of gate-edge component | $Am/V^3$ | 1e-18 |

Table 2.37: JUNCAP200 Diode Device Model Parameters

| Parameter | Description | Units | Default |
|---|---|---|---|
| CBBTSTI | Band-to-band tunneling prefactor of STI-edge component | $Am/V^3$ | 1e-18 |
| CJORBOT | Zero-bias capacitance per unit-of-area of bottom component | $F/m^2$ | 0.001 |
| CJORGAT | Zero-bias capacitance per unit-of-length of gate-edge component | F/m | 1e-09 |
| CJORSTI | Zero-bias capacitance per unit-of-length of STI-edge component | F/m | 1e-09 |
| CSRHBOT | Shockley-Read-Hall prefactor of bottom component | $A/m^3$ | 100 |
| CSRHGAT | Shockley-Read-Hall prefactor of gate-edge component | $A/m^2$ | 0.0001 |
| CSRHSTI | Shockley-Read-Hall prefactor of STI-edge component | $A/m^2$ | 0.0001 |
| CTATBOT | Trap-assisted tunneling prefactor of bottom component | $A/m^3$ | 100 |
| CTATGAT | Trap-assisted tunneling prefactor of gate-edge component | $A/m^2$ | 0.0001 |
| CTATSTI | Trap-assisted tunneling prefactor of STI-edge component | $A/m^2$ | 0.0001 |
| DTA | Temperature offset with respect to ambient temperature | K | 0 |
| FBBTRBOT | Normalization field at the reference temperature for band-to-band tunneling of bottom component | $Vm^{-1}$ | 1e+09 |
| FBBTRGAT | Normalization field at the reference temperature for band-to-band tunneling of gate-edge component | $Vm^{-1}$ | 1e+09 |
| FBBTRSTI | Normalization field at the reference temperature for band-to-band tunneling of STI-edge component | $Vm^{-1}$ | 1e+09 |
| FJUNQ | Fraction below which junction capacitance components are considered negligible | — | 0.03 |
| FREV | Coefficient for reverse breakdown current limitation | — | 1000 |
| IDSATRBOT | Saturation current density at the reference temperature of bottom component | $A/m^2$ | 1e-12 |
| IDSATRGAT | Saturation current density at the reference temperature of gate-edge component | A/m | 1e-18 |
| IDSATRSTI | Saturation current density at the reference temperature of STI-edge component | A/m | 1e-18 |
| IMAX | Maximum current up to which forward current behaves exponentially | A | 1000 |

Table 2.37: JUNCAP200 Diode Device Model Parameters

| Parameter | Description | Units | Default |
|---|---|---|---|
| LEVEL | Model level must be 200 | — | 200 |
| MEFFTATBOT | Effective mass (in units of m0) for trap-assisted tunneling of bottom component | — | 0.25 |
| MEFFTATGAT | Effective mass (in units of m0) for trap-assisted tunneling of gate-edge component | — | 0.25 |
| MEFFTATSTI | Effective mass (in units of m0) for trap-assisted tunneling of STI-edge component | — | 0.25 |
| PBOT | Grading coefficient of bottom component | — | 0.5 |
| PBRBOT | Breakdown onset tuning parameter of bottom component | V | 4 |
| PBRGAT | Breakdown onset tuning parameter of gate-edge component | V | 4 |
| PBRSTI | Breakdown onset tuning parameter of STI-edge component | V | 4 |
| PGAT | Grading coefficient of gate-edge component | — | 0.5 |
| PHIGBOT | Zero-temperature bandgap voltage of bottom component | V | 1.16 |
| PHIGGAT | Zero-temperature bandgap voltage of gate-edge component | V | 1.16 |
| PHIGSTI | Zero-temperature bandgap voltage of STI-edge component | V | 1.16 |
| PSTI | Grading coefficient of STI-edge component | — | 0.5 |
| STFBBTBOT | Temperature scaling parameter for band-to-band tunneling of bottom component | 1/K | -0.001 |
| STFBBTGAT | Temperature scaling parameter for band-to-band tunneling of gate-edge component | 1/K | -0.001 |
| STFBBTSTI | Temperature scaling parameter for band-to-band tunneling of STI-edge component | 1/K | -0.001 |
| SWJUNEXP | Flag for JUNCAP-express; 0=full model, 1=express model | — | 0 |
| TRJ | Reference temperature | °C | 21 |
| TYPE | Type parameter, in output value 1 reflects n-type, -1 reflects p-type | — | 1 |
| VBIRBOT | Built-in voltage at the reference temperature of bottom component | V | 1 |
| VBIRGAT | Built-in voltage at the reference temperature of gate-edge component | V | 1 |
| VBIRSTI | Built-in voltage at the reference temperature of STI-edge component | V | 1 |
| VBRBOT | Breakdown voltage of bottom component | V | 10 |

Table 2.37: JUNCAP200 Diode Device Model Parameters

| Parameter | Description | Units | Default |
|---|---|---|---|
| VBRGAT | Breakdown voltage of gate-edge component | V | 10 |
| VBRSTI | Breakdown voltage of STI-edge component | V | 10 |
| VJUNREF | Typical maximum junction voltage; usually about 2*VSUP | V | 2.5 |
| XJUNGAT | Junction depth of gate-edge component | m | 1e-07 |
| XJUNSTI | Junction depth of STI-edge component | m | 1e-07 |

## Level 1 Diode Equations

The equations in this section use the following variables:

$$
\begin{aligned}
V_{di} &= \text{voltage across the intrinsic diode only} \\
V_{th} &= k \cdot T/q \text{ (thermal voltage)} \\
k &= \text{Boltzmann's constant} \\
q &= \text{electron charge} \\
T &= \text{analysis temperature (Kelvin)} \\
T_0 &= \text{nominal temperature (set using } \mathbf{TNOM} \text{ option)} \\
\omega &= \text{Frequency (Hz)}
\end{aligned}
$$

Other variables are listed above in the diode model parameters.

Level=1

The level 1 diode is based on the Spice3f5 level 1 model.

DC Current (Level=1)

The intrinsic diode current consists of forward and reverse bias regions where

$$
I_D = \begin{cases} \mathbf{IS} \cdot \left[\exp\left(\frac{V_{di}}{\mathbf{N}V_{th}}\right) - 1\right], & V_{di} > -3.0 \cdot \mathbf{N}V_{th} \\ -\mathbf{IS} \cdot \mathbf{IRF} \cdot \left[1.0 + \left(\frac{3.0 \cdot \mathbf{N}V_{th}}{V_{di} \cdot e}\right)^3\right], & V_{di} < -3.0 \cdot \mathbf{N}V_{th} \end{cases}
$$

$\mathbf{IRF}$ is a **Xyce**-specific parameter that can be used to scale the reverse-biased current to match measured data. It defaults to $1.0$, which reduces the model to strict SPICE3F5 compatibility.

When $\mathbf{BV}$ and an optional parameter $\mathbf{IBV}$ are explicitly given in the model statement, an exponential model is used to model reverse breakdown (with a "knee" current of $\mathbf{IBV}$ at a "knee-on"

voltage of $\mathbf{BV}$). The equation for $I_D$ implemented by **Xyce** is given by

$$I_D = -\mathbf{IBV_{eff}} \cdot \exp\left(-\frac{\mathbf{BV_{eff}} + V_{di}}{\mathbf{N}V_{th}}\right), \qquad V_{di} \leq \mathbf{BV_{eff}},$$

where $\mathbf{BV_{eff}}$ and $\mathbf{IBV_{eff}}$ are chosen to satisfy the following constraints:

1. Continuity of $I_D$ between reverse bias and reverse breakdown regions (i.e., continuity of $I_D$ at $V_{di} = -\mathbf{BV_{eff}}$):

$$\mathbf{IBV_{eff}} = \mathbf{IRF} \cdot \mathbf{IS}\left(1 - \left(\frac{3.0 \cdot \mathbf{N}V_{th}}{e \cdot \mathbf{BV_{eff}}}\right)^3\right)$$

2. "Knee-on" voltage/current matching:

$$\mathbf{IBV_{eff}} \cdot \exp\left(-\frac{\mathbf{BV_{eff}} - \mathbf{BV}}{\mathbf{N}V_{th}}\right) = \mathbf{IBV}$$

Substituting the first expression into the second yields a single constraint on $\mathbf{BV_{eff}}$ which cannot be solved for directly. By performing some basic algebraic manipulation and rearranging terms, the problem of finding $\mathbf{BV_{eff}}$ which satisfies the above two constraints can be cast as finding the (unique) solution of the equation

$$\mathbf{BV_{eff}} = f(\mathbf{BV_{eff}}), \tag{2.20}$$

where $f(\cdot)$ is the function that is obtained by solving for the $\mathbf{BV_{eff}}$ term which appears in the exponential in terms of $\mathbf{BV_{eff}}$ and the other parameters. **Xyce** solves Eqn. 2.20 by performing the so-called *Picard Iteration* procedure [6], i.e. by producing successive estimates of $\mathbf{BV_{eff}}$ (which we will denote as $\mathbf{BV_{eff}}^k$) according to

$$\mathbf{BV_{eff}}^{k+1} = f(\mathbf{BV_{eff}}^k)$$

starting with an initial guess of $\mathbf{BV_{eff}}^0 = \mathbf{BV}$. The current iteration procedure implemented in **Xyce** can be shown to guarantee at least six significant digits of accuracy between the numerical estimate of $\mathbf{BV_{eff}}$ and the true value.

In addition to the above, **Xyce** also requires that $\mathbf{BV_{eff}}$ lie in the range $\mathbf{BV} \geq \mathbf{BV_{eff}} \geq 3.0\mathbf{N}V_{th}$. In terms of $\mathbf{IBV}$, this is equivalent to enforcing the following two constraints:

$$\mathbf{IRF} \cdot \mathbf{IS}\left(1 - \left(\frac{3.0 \cdot \mathbf{N}V_{th}}{e \cdot \mathbf{BV}}\right)^3\right) \leq \mathbf{IBV} \tag{2.21}$$

$$\mathbf{IRF} \cdot \mathbf{IS}\left(1 - e^{-3}\right)\exp\left(\frac{-3.0 \cdot \mathbf{N}V_{th} + \mathbf{BV}}{\mathbf{N}V_{th}}\right) \geq \mathbf{IBV} \tag{2.22}$$

**Xyce** first checks the value of $\mathbf{IBV}$ to ensure that the above two constraints are satisfied. If Eqn. 2.21 is violated, **Xyce** sets $\mathbf{IBV_{eff}}$ to be equal to the left-hand side of Eqn. 2.21 and, correspondingly, sets $\mathbf{BV_{eff}}$ to $-3.0 \cdot \mathbf{N}V_{th}$. If Eqn. 2.22 is violated, **Xyce** sets $\mathbf{IBV_{eff}}$ to be equal to the left-hand side of Eqn. 2.22 and, correspondingly, sets $\mathbf{BV_{eff}}$ to $\mathbf{BV}$.

Capacitance (Level=1)

The p-n diode capacitance consists of a depletion layer capacitance $C_d$ and a diffusion capacitance $C_{dif}$. The first is given by

$$C_d = \begin{cases} \mathbf{CJ} \cdot \mathbf{AREA} \left(1 - \frac{V_{di}}{\mathbf{VJ}}\right)^{-\mathbf{M}}, & V_{di} \leq \mathbf{FC} \cdot \mathbf{VJ} \\ \frac{\mathbf{CJ} \cdot \mathbf{AREA}}{\mathbf{F2}} \left(\mathbf{F3} + \mathbf{M}\frac{V_{di}}{\mathbf{VJ}}\right), & V_{di} > \mathbf{FC} \cdot \mathbf{VJ} \end{cases}$$

The diffusion capacitance (sometimes referred to as the transit time capacitance) is

$$C_{dif} = \mathbf{TT}G_d = \mathbf{TT}\frac{dI_D}{dV_{di}}$$

where $G_d$ is the junction conductance.

Temperature Effects (Level=1)

The diode model contains explicit temperature dependencies in the ideal diode current, the generation/recombination current and the breakdown current. Further temperature dependencies are present in the diode model via the saturation current $I_S$, the depletion layer junction capacitance $CJ$, the junction potential $V_J$.

$$\begin{aligned}
V_t(T) &= \frac{kT}{q} \\
V_{tnom}(T) &= \frac{k\mathbf{TNOM}}{q} \\
E_g(T) &= E_{g0} - \frac{\alpha T^2}{\beta + T} \\
E_{gNOM}(T) &= E_{g0} - \frac{\alpha \mathbf{TNOM}^2}{\mathbf{TNOM} + \beta} \\
arg1(T) &= -\frac{E_g(T)}{2kT} + \frac{E_{g300}}{2kT_0} \\
arg2(T) &= -\frac{E_{gNOM}(T)}{2k\mathbf{TNOM}} + \frac{E_{g300}}{2kT_0} \\
pbfact1(T) &= -2.0 \cdot V_t(T) \left(1.5 \cdot \ln\left(\frac{T}{T_0}\right) + q \cdot arg1(T)\right) \\
pbfact2(T) &= -2.0 \cdot V_{tnom}(T) \left(1.5 \cdot \ln\left(\frac{\mathbf{TNOM}}{T_0}\right) + q \cdot arg2(T)\right) \\
pbo(T) &= (\mathbf{VJ} - pbfact2(T)) \frac{T_0}{\mathbf{TNOM}}
\end{aligned}$$

$$
\begin{aligned}
V_J(T) &= pbfact1(T) + \frac{T}{T_0} pbo(T) \\
gma_{old}(T) &= \frac{\mathbf{VJ} - pbo(T)}{pbo(T)} \\
gma_{new}(T) &= \frac{V_J(T) - pbo(T)}{pbo(T)} \\
CJ(T) &= \mathbf{CJ0} \frac{1.0 + \mathbf{M}\left(4.0 \times 10^{-4}\left(T - T_0\right) - gma_{new}(T)\right)}{1.0 + \mathbf{M}\left(4.0 \times 10^{-4}\left(\mathbf{TNOM} - T_0\right) - gma_{old}(T)\right)} \\
I_S(T) &= \mathbf{IS} \cdot \exp\left(\left(\frac{T}{\mathbf{TNOM}} - 1.0\right) \cdot \frac{\mathbf{EG}}{\mathbf{N} V_t(T)} + \frac{\mathbf{XTI}}{\mathbf{N}} \cdot \ln\left(\frac{T}{\mathbf{TNOM}}\right)\right)
\end{aligned}
$$

where, for silicon, $\alpha = 7.02 \times 10^{-4}\ eV/K$, $\beta = 1108\ K$ and $E_{g0} = 1.16\ eV$.

For a more thorough description of p-n junction physics, see [9]. For a thorough description of the U.C. Berkeley SPICE models see Reference [11].

## 2.3.9 Independent Current Source

**Symbol**

**Instance Form**

```
I<name> <(+) node> <(-) node> [ [DC] <value> ]
+ [AC [magnitude value [phase value] ] ] [transient specification]
```

**Examples**

```
ISLOW 1 22 SIN(0.5 1.0ma 1KHz 1ms)
IPULSE 1 3 PULSE(-1 1 2ns 2ns 2ns 50ns 100ns)
```

**Parameters and Options**

`transient specification`

There are five predefined time-varying functions for sources:

`PULSE <parameters>` Pulse waveform

`SIN <parameters>` Sinusoidal waveform

`EXP <parameters>` Exponential waveform

`PWL <parameters>` Piecewise linear waveform

`SFFM <parameters>` Frequency-modulated waveform

**Comments**

Positive current flows from the positive node through the source to the negative node.

The power supplied or dissipated by the current source is calculated with $I \cdot \Delta V$ where the voltage drop is calculated as $(V_+ - V_-)$ and positive current flows from $V_+$ to $V_-$. Dissipated power has a positive sign, while supplied power has a negative sign.

The default value is zero for the DC, AC, and transient values. None, any, or all of the DC, AC, and transient values can be specified. The AC phase value is in degrees.

### Transient Specifications

This section outlines the available transient specifications. $\Delta t$ and $T_F$ are the time step size and simulation end-time, respectively.

Pulse

```
PULSE(I1 I2 TD TR TF PW PER)
```

Table 2.38: Pulse Parameters

| Parameter | Description | Units | Default |
|---|---|---|---|
| I1 | Initial Value | amp | – |
| I2 | Pulse Value | amp | – |
| TD | Delay Time | s | 0.0 |
| TR | Rise Time | s | $\Delta t$ |
| TF | Fall Time | s | $\Delta t$ |
| PW | Pulse Width | s | $T_F$ |
| PER | Period | s | $T_F$ |

Sine

```
SIN(IO IA FREQ TD THETA PHASE)
```

Table 2.39: Sine Parameters

| Parameter | Description | Units | Default |
|---|---|---|---|
| IO | Offset | amp | – |
| IA | Amplitude | amp | – |
| FREQ | Frequency | $s^{-1}$ | 0.0 |
| TD | Delay | s | $\Delta t$ |
| THETA | Attenuation Factor | s | $\Delta t$ |
| PHASE | Phase | degrees | 0.0 |

The waveform is shaped according to the following equations, where $\phi = \pi * \mathbf{PHASE}/180$ :

$$I = \begin{cases} I_0, & 0 < t < T_D \\ I_0 + I_A \sin[2\pi \cdot \mathbf{FREQ} \cdot (t - T_D) + \phi] \exp[-(t - T_D) \cdot \mathbf{THETA}], & T_D < t < T_F \end{cases}$$

Exponent

```
EXP(I1 I2 TD1 TAU1 TD2 TAU2)
```

Table 2.40: Exponent Parameters

| Parameter | Description | Units | Default |
|---|---|---|---|
| I1 | Initial Amplitude | amp | N/A |
| I2 | Amplitude | amp | N/A |
| TD1 | Rise Delay Time | s | 0.0 |

Table 2.40: Exponent Parameters

| Parameter | Description | Units | Default |
|---|---|---|---|
| TAU1 | Rise Time Constant | s | $\Delta t$ |
| TD2 | Delay Fall Time | s | TD1 $+\Delta t$ |
| TAU2 | Fall Time Constant | s | $\Delta t$ |

The waveform is shaped according to the following equations:

$$I = \begin{cases} I_1, & 0 < t < \mathrm{TD1} \\ I_1 + (I_2 - I_1)\{1 - \exp[-(t - \mathrm{TD1})/\mathrm{TAU1}]\}, & \mathrm{TD1} < t < \mathrm{TD2} \\ I_1 + (I_2 - I_1)\{1 - \exp[-(t - \mathrm{TD1})/\mathrm{TAU1}]\} & \\ \quad +(I_1 - I_2)\{1 - \exp[-(t - \mathrm{TD2})/\mathrm{TAU2}]\}, & \mathrm{TD2} < t < T_2 \end{cases}$$

Piecewise Linear

```
PWL  T0 I0 [Tn In]*
PWL  FILE "<name>" [TD=<timeDelay>] [R=<repeatTime>]
```

Table 2.41: Piecewise Linear Parameters

| Parameter | Description | Units | Default |
|---|---|---|---|
| $T_n$ | Time at Corner | s | none |
| $I_n$ | Current at Corner | amp | none |
| TD | Time Delay | s | 0 |
| R | Repeat Time | s | none |

When the FILE option is given, **Xyce** will read the corner points from the file specified in the `<name>` field. This file should be a plain ASCII text file (or a .CSV file) with the time/current pairs. There should be one pair per line, and the time and current values should be separated by whitespace or commas. As an example, the file specified (e.g., `ipwl.csv`) could have these five lines:

```
0.00, 0.00
2.00, 3.00
3.00, 2.00
4.00, 2.00
4.01, 5.00
```

The corresponding example instance lines would be:

```
IPWL1 1 0 PWL 0S 0A  2S 3A  3S 2A  4S 2A  4.01S 5A
IPWL2 2 0 PWL FILE "ipwl.txt"
```

```
IPWL3 3 0 PWL file "ipwl.csv"
```

It is a best practice to specify all of the time-voltage pairs in the PWL specification. However, for compatibility with HSpice and PSpice, if the user-specified list of time/voltage pairs omits the pair at time=0 as the first pair in the list then **Xyce** will insert a pair at time=0 with the voltage value at the first user-specified time value. As an example, this user-specified list:

```
2S 3V  3S 2V  4S 2V  4.01S 5V
```

would be implemented in **Xyce** as follows:

```
0S 3V  2S 3V  3S 2V  4S 2V  4.01S 5V
```

TD has units of seconds, and specifies the length of time to delay the start of PWL waveform. The default is to have no delay, and TD is an optional parameter.

The Repeat Time (R) is an optional parameter. If R is omitted then the waveform will not repeat. If R is included then the waveform will repeat until the end of the simulation. As examples, R=0 means repeat the PWL waveform from time=0 to the last time ($T_N$) specified in the waveform specification. (This would use the time points 0s, 2s, 3s, 4s and 4.01s for the example waveform given above.). In general, R=`<repeatTime>` means repeat the waveform from time equal to `<repeatTime>` seconds in the waveform specification to the last time ($T_N$) specified in the waveform specification. So, the `<repeatTime>` must be greater than or equal to 0 and less than the last time point ($T_N$). If the R parameter is used then it must have a value.

The specification `PWL FILE "<name>" R` is illegal in **Xyce** as a shorthand for R=0. Also, the **Xyce** syntax for PWL sources is not compatible with the PSpice `REPEAT` syntax for PWL sources. See section 6.1.11 for more details.

The repeat time (R) does enable the specification of discontinuous piecewise linear waveforms. For example, this waveform is a legal **Xyce** syntax.

```
IPWL1 1 0 PWL 0S 0V  2S 3V  3S 2V  4S 2V  4.01V 5V  R=2
```

However, in general, discontinuous source waveforms may cause convergence problems.

Frequency Modulated

```
SFFM (IOFF IAMPL FC MOD FM)
```

Table 2.42: Frequency Modulated Parameters

| Parameter | Description | Units | Default |
|---|---|---|---|
| IOFF | Offset Current | amp | none |

Table 2.42: Frequency Modulated Parameters

| Parameter | Description | Units | Default |
|---|---|---|---|
| `IAMPL` | Peak Current Amplitude | amp | none |
| `FC` | Carrier Frequency | hertz | 1/**TSTOP** |
| `MOD` | Modulation Index | - | 0 |
| `FM` | Modulation Frequency | hertz | 1/**TSTOP** |

**TSTOP** is the final time, as entered into the transient (`.TRANS`) command. The waveform is shaped according to the following equation:

$$I = \mathbf{ioff} + \mathbf{iampl} \cdot \sin(2\pi \cdot \mathbf{fc} \cdot \mathbf{TIME} + \mathrm{mod} \cdot \sin(2\pi \cdot \mathbf{fm} \cdot \mathbf{TIME}))$$

where **TIME** is the current simulation time.

## 2.3.10 Independent Voltage Source

**Symbol**

**Instance Form**

```
V<name> <(+) node> <(-) node> [ [DC] <value> ]
+ [AC [magnitude value [phase value] ] ] [transient specification]
```

**Examples**

```
VSLOW 1 22 SIN(0.5 1.0mV 1KHz 1ms)
VPULSE 1 3 PULSE(-1 1 2ns 2ns 2ns 50ns 100ns)
```

**Parameters and Options**

`transient specification`

There are five predefined time-varying functions for sources:

`PULSE <parameters>` Pulse waveform

`SIN <parameters>` Sinusoidal waveform

`EXP <parameters>` Exponential waveform

`PWL <parameters>` Piecewise linear waveform

`SFFM <parameters>` Frequency-modulated waveform

**Comments**

Positive current flows from the positive node through the source to the negative node.

The power supplied or dissipated by the voltage source is calculated with $I \cdot \Delta V$ where the voltage drop is calculated as $(V_+ - V_-)$ and positive current flows from $V_+$ to $V_-$. Dissipated power has a positive sign, while supplied power has a negative sign.

None, any, or all of the DC, AC, and transient values can be specified. The AC phase value is in degrees.

### Transient Specifications

This section outlines the available transient specifications. $\Delta t$ and $T_F$ are the time step size and simulation end-time, respectively.

Pulse

```
PULSE(V1 V22 TD TR TF PW PER)
```

Table 2.43: Pulse Parameters

| Parameter | Description | Units | Default |
|---|---|---|---|
| V1 | Initial Value | Volt | – |
| V2 | Pulse Value | Volt | – |
| TD | Delay Time | s | 0.0 |
| TR | Rise Time | s | $\Delta t$ |
| TF | Fall Time | s | $\Delta t$ |
| PW | Pulse Width | s | $T_F$ |
| PER | Period | s | $T_F$ |

Sine

```
SIN(VO VA FREQ TD THETA PHASE)
```

Table 2.44: Sine Parameters

| Parameter | Description | Units | Default |
|---|---|---|---|
| VO | Offset | Volt | – |
| VA | Amplitude | Volt | – |
| FREQ | Frequency | $s^{-1}$ | 0.0 |
| TD | Delay | s | $\Delta t$ |
| THETA | Attenuation Factor | s | $\Delta t$ |
| PHASE | Phase | degrees | 0.0 |

The waveform is shaped according to the following equations, where $\phi = \pi * \mathbf{PHASE}/180$ :

$$V = \begin{cases} V_0, & 0 < t < T_D \\ V_0 + V_A \sin[2\pi \cdot \mathbf{FREQ} \cdot (t - T_D) + \phi] \exp[-(t - T_D) \cdot \mathbf{THETA}], & T_D < t < T_F \end{cases}$$

Exponent

```
EXP(V1 V2 TD1 TAU1 TD2 TAU2)
```

Table 2.45: Exponent Parameters

| Parameter | Description | Units | Default |
|---|---|---|---|
| V1 | Initial Amplitude | Volt | N/A |
| V2 | Amplitude | Volt | N/A |
| TD1 | Rise Delay Time | s | 0.0 |

Table 2.45: Exponent Parameters

| Parameter | Description | Units | Default |
|---|---|---|---|
| TAU1 | Rise Time Constant | s | $\Delta t$ |
| TD2 | Delay Fall Time | s | TD1 $+\Delta t$ |
| TAU2 | Fall Time Constant | s | $\Delta t$ |

The waveform is shaped according to the following equations:

$$V = \begin{cases} V_1, & 0 < t < \mathrm{TD1} \\ V_1 + (V_2 - V_1)\{1 - \exp[-(t - \mathrm{TD1})/\mathrm{TAU1}]\}, & \mathrm{TD1} < t < \mathrm{TD2} \\ V_1 + (V_2 - V_1)\{1 - \exp[-(t - \mathrm{TD1})/\mathrm{TAU1}]\} & \\ \quad +(V_1 - V_2)\{1 - \exp[-(t - \mathrm{TD2})/\mathrm{TAU2}]\}, & \mathrm{TD2} < t < T_2 \end{cases}$$

Piecewise Linear

```
PWL  T0 V0 [Tn Vn]*
PWL  FILE "<name>" [TD=<timeDelay>] [R=<repeatTime>]
```

Table 2.46: Piecewise Linear Parameters

| Parameter | Description | Units | Default |
|---|---|---|---|
| $T_n$ | Time at Corner | s | none |
| $V_n$ | Voltage at Corner | Volt | none |
| TD | Time Delay | s | 0 |
| R | Repeat Time | s | none |

When the FILE option is given, **Xyce** will read the corner points from the file specified in the `<name>` field. This file should be a plain ASCII text file (or a .CSV file) with time/voltage pairs. There should be one pair per line, and the time and voltage values should be separated by whitespace or commas. As an example, the file specified (e.g., `vpwl.csv`) could have these five lines:

```
0.00, 0.00
2.00, 3.00
3.00, 2.00
4.00, 2.00
4.01, 5.00
```

The corresponding example instance lines would be:

```
VPWL1 1 0 PWL 0S 0V  2S 3V  3S 2V  4S 2V  4.01S 5V
VPWL2 2 0 PWL FILE "vpwl.txt"
```

```
VPWL3 3 0 PWL file "vpwl.csv"
```

It is a best practice to specify all of the time-voltage pairs in the PWL specification. However, for compatibility with HSpice and PSpice, if the user-specified list of time/voltage pairs omits the pair at time=0 as the first pair in the list then **Xyce** will insert a pair at time=0 with the voltage value at the first user-specified time value. As an example, this user-specified list:

```
2S 3V  3S 2V  4S 2V  4.01S 5V
```

would be implemented in **Xyce** as follows:

```
0S 3V  2S 3V  3S 2V  4S 2V  4.01S 5V
```

TD has units of seconds, and specifies the length of time to delay the start of PWL waveform. The default is to have no delay, and TD is an optional parameter.

The Repeat Time (R) is an optional parameter. If R is omitted then the waveform will not repeat. If R is included then the waveform will repeat until the end of the simulation. As examples, R=0 means repeat the PWL waveform from time=0 to the last time ($T_N$) specified in the waveform specification. (This would use the time points 0s, 2s, 3s, 4s and 4.01s for the example waveform given above.) In general, R=`<repeatTime>` means repeat the waveform from time equal to `<repeatTime>` seconds in the waveform specification to the last time ($T_N$) specified in the waveform specification. So, the `<repeatTime>` must be greater than or equal to 0 and less than the last time point ($T_N$). If the R parameter is used then it must have a value.

The specification `PWL FILE "<name>" R` is illegal in **Xyce** as a shorthand for R=0. Also, the **Xyce** syntax for PWL sources is not compatible with the PSpice `REPEAT` syntax for PWL sources. See section 6.1.11 for more details.

The repeat time (R) does enable the specification of discontinuous piecewise linear waveforms. For example, this waveform is a legal **Xyce** syntax.

```
VPWL1 1 0 PWL 0S 0V  2S 3V  3S 2V  4S 2V  4.01V 5V  R=2
```

However, in general, discontinuous source waveforms may cause convergence problems.

Frequency Modulated

```
SFFM (VOFF VAMPL FC MOD FM)
```

Table 2.47: Frequency Modulated Parameters

| Parameter | Description | Units | Default |
|---|---|---|---|
| VOFF | Offset Current | Volt | none |

Table 2.47: Frequency Modulated Parameters

| Parameter | Description | Units | Default |
|---|---|---|---|
| `VAMPL` | Peak Current Amplitude | Volt | none |
| `FC` | Carrier Frequency | hertz | 1/**TSTOP** |
| `MOD` | Modulation Index | - | 0 |
| `FM` | Modulation Frequency | hertz | 1/**TSTOP** |

**TSTOP** is the final time, as entered into the transient (`.TRANS`) command. The waveform is shaped according to the following equation:

$$V = \mathbf{voff} + \mathbf{vampl} \cdot \sin(2\pi \cdot \mathbf{fc} \cdot \mathbf{TIME} + \mathrm{mod} \cdot \sin(2\pi \cdot \mathbf{fm} \cdot \mathbf{TIME}))$$

where **TIME** is the current simulation time.

## 2.3.11 Voltage Controlled Voltage Source

**Symbol**

**Instance Form**

```
E<name> <(+) node> <(-) node> <(+) controlling node>
+ <(-) controlling node> <gain>
E<name> <(+) node> <(-) node> VALUE =  <expression>
E<name> <(+) node> <(-) node> TABLE  <expression>  =
+ < <input value>,<output value> >*
E<name> <(+) node> <(-) node> POLY(<value>)
+ [<+ control node> <- control node>]*
+ [<polynomial coefficient value>]*
```

**Examples**

```
EBUFFER 1 2 10 11 5.0
ESQROOT   5   0 VALUE = 5V*SQRT(V(3,2))
ET2 2 0 TABLE V(ANODE,CATHODE) = (0,0) (30,1)
EP1 5 1 POLY(2) 3 0 4 0 0 .5 .5
```

**Parameters and Options**

`(+) node`
`(-) node`
: Output nodes. Positive current flows from the `(+)` node through the source to the `(-)` node.

`(+) controlling node`
`(-) controlling node`
: Node pairs that define a set of controlling voltages. A given node may appear multiple times and the output and controlling nodes may be the same.

**Comments**

In the first form, a specified voltage drop between controlling nodes is multiplied by the gain to determine the voltage drop across the output nodes.

The second through fourth forms allow nonlinear controlled sources using the `VALUE`, `TABLE`, or `POLY` keywords, respectively, and are used in analog behavioral modeling. They are provided primarily for netlist compatibility with other simulators. These three forms are automatically converted within **Xyce** to its principal ABM device, the `B` nonlinear dependent source device. See the B-source section (2.3.15) and the **Xyce** User's Guide for more guidance on analog behavioral modeling. For details concerning the use of the `POLY` format, see section 2.2.5.

The power supplied or dissipated by this source device is calculated with $I \cdot \Delta V$ where the voltage drop is calculated as $(V_+ - V_-)$ and positive current flows

from $V_+$ to $V_-$. Dissipated power has a positive sign, while supplied power has a negative sign.

## 2.3.12 Current Controlled Current Source

**Symbol**

**Instance Form**

```
F<name> <(+) node> <(-) node>
+ <controlling V device name> <gain>
F<name> <(+) node> <(-) node> POLY(<value>)
+ <controlling V device name>*
+ < <polynomial coefficient value> >*
```

**Examples**

```
FSENSE 1 2 VSENSE 10.0
FAMP 13 0 POLY(1) VIN 0 500
FNONLIN 100 101 POLY(2) VCNTRL1 VCINTRL2 0.0 13.6 0.2 0.005
```

**Parameters and Options**

`(+) node`
`(-) node`
: Output nodes. Positive current flows from the `(+)` node through the source to the `(-)` node.

`controlling V device`
: The controlling voltage source which must be an independent voltage source (V device).

**Comments**

In the first form, a specified current through a controlling device is multiplied by the gain to determine this device's output current.

The second form using the `POLY` keyword is used in analog behavioral modeling. This form is automatically converted within **Xyce** to its principal ABM device, the `B` nonlinear dependent source device. See the B-source section (2.3.15) and the **Xyce** User's Guide for more guidance on analog behavioral modeling. For details concerning the use of the `POLY` format, see section 2.2.5.

The power supplied or dissipated by this source device is calculated with $I \cdot \Delta V$ where the voltage drop is calculated as $(V_+ - V_-)$ and positive current flows from $V_+$ to $V_-$. Dissipated power has a positive sign, while supplied power has a negative sign.

## 2.3.13 Voltage Controlled Current Source

**Symbol**

**Instance Form**

```
G<name> <(+) node> <(-) node> <(+) controlling node>
+ <(-) controlling node> <transconductance>
G<name> <(+) <node> <(-) node> VALUE =  <expression>
G<name> <(+) <node> <(-) node> TABLE  <expression>  =
+ < <input value>,<output value> >*
G<name> <(+) <node> <(-) node> POLY(<value>)
+ [<+ controlling node> <- controlling node>]*
+ [<polynomial coefficient>]*
```

**Examples**

```
GBUFFER 1 2 10 11 5.0
GPSK 11 6 VALUE = 5MA*SIN(6.28*10kHz*TIME+V(3))
GA2 2 0 TABLE V(5) = (0,0) (1,5) (10,5) (11,0)
```

**Parameters and Options**

`(+) node`
`(-) node`
: Output nodes. Positive current flows from the `(+)` node through the source to the `(-)` node.

`(+) controlling node`
`(-) controlling node`
: Node pairs that define a set of controlling voltages. A given node may appear multiple times and the output and controlling nodes may be the same.

**Comments**

In the first form, the voltage drop between the controlling nodes is multiplied by the transconductance to obtain the current-source output of the `G` device.

The second through fourth forms using the `VALUE`, `TABLE`, and `POLY` keywords, respectively, are used in analog behavioral modeling. They are provided primarily for netlist compatibility with other simulators. These two forms are automatically converted within **Xyce** to its principal ABM device, the B nonlinear dependent source device. See the B-source section (2.3.15) and the **Xyce** User's Guide for more guidance on analog behavioral modeling. For details concerning the use of the `POLY` format, see section 2.2.5.

The power supplied or dissipated by this source device is calculated with $I \cdot \Delta V$ where the voltage drop is calculated as $(V_+ - V_-)$ and positive current flows from $V_+$ to $V_-$. Dissipated power has a positive sign, while supplied power has a negative sign.

## 2.3.14 Current Controlled Voltage Source

The syntax of this device is exactly the same as for a Current Controlled Current Source. For a Current-Controlled Voltage Source just substitute an H for the F. The H device generates a voltage, whereas the F device generates a current.

**Symbol**

**Instance Form**

```
H<name> <(+) node> <(-) node>
+ <controlling V device name> <gain>
H<name> <(+) node> <(-) node> POLY(<value>)
+ <controlling V device name>*
+ < <polynomial coefficient value> >*
```

**Examples**

```
HSENSE 1 2 VSENSE 10.0
HAMP 13 0 POLY(1) VIN 0 500
HNONLIN 100 101 POLY(2) VCNTRL1 VCINTRL2 0.0 13.6 0.2 0.005
```

**Comments**

In the first form, the current through a specified voltage source controls is multiplied by a constant to obtain the voltage-source output.

The second form using the `POLY` keyword is used in analog behavioral modeling. It is provided primarily for netlist compatibility with other simulators. These two forms are automatically converted within **Xyce** to its principal ABM device, the B nonlinear dependent source device. See the B-source section (2.3.15) and the **Xyce** User's Guide for more guidance on analog behavioral modeling. For details concerning the use of the `POLY` format, see section 2.2.5.

The power supplied or dissipated by this source device is calculated with $I \cdot \Delta V$ where the voltage drop is calculated as $(V_+ - V_-)$ and positive current flows from $V_+$ to $V_-$. Dissipated power has a positive sign, while supplied power has a negative sign.

## 2.3.15 Nonlinear Dependent Source

**Instance Form**

```
B<name> <(+) node> <(-) node> V=ABM expression
B<name> <(+) node> <(-) node> I=ABM expression
```

**Examples**

```
B1 2 0 V={sqrt(V(1))}
B2 4 0 V={V(1)*TIME}
B3 4 2 I={I(V1) + V(4,2)/100}
B4 5 0 V={Table V(5)=(0,0) (1.0,2.0) (2.0,3.0) (3.0,10.0)}
```

**Comments**

The nonlinear dependent source device, also known as the B-source device, is used in analog behavioral modeling (ABM). The `(+)` and `(-)` nodes are the output nodes. Positive current flows from the `(+)` node through the source to the `(-)` node.

The power supplied or dissipated by the nonlinear dependent source is calculated with $I \cdot \Delta V$ where the voltage drop is calculated as $(V_+ - V_-)$ and positive current flows from $V_+$ to $V_-$. Dissipated power has a positive sign, while supplied power has a negative sign.

It is important to note that the B-source allows the user to specify expressions that could have infinite-slope transitions, such as the following. (Note: the braces surrounding all expressions are required in this definition.)

```
Bcrtl OUTA 0 V={ IF( (V(IN) > 3.5), 5, 0 ) }
```

This can lead to "timestep too small" errors when **Xyce** reaches the transition point. Infinite-slope transitions in expressions dependent only on the `time` variable are a special case, because **Xyce** can detect that they are going to happen in the future and set a "breakpoint" to capture them. Infinite-slope transitions depending on other solution variables cannot be predicted in advance, and cause the time integrator to scale back the timestep repeatedly in an attempt to capture the feature until the timestep is too small to continue.

See the "Analog Behavioral Modeling" chapter of the **Xyce** User's Guide for guidance on using the B-source device and ABM expressions, and the Expressions Section (2.2) for complete documentation of expressions and expression operators.

## 2.3.16 Bipolar Junction Transistor (BJT)

**Symbol**

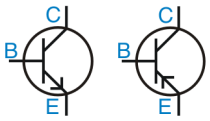


**Instance Form**

```
Q<name> <collector node> <base node> <emitter node>
 + [substrate node] <model name> [area value]

Q<name> <collector node> <base node> <emitter node>
 + <thermal node> <VBIC 1.2 model name>

Q<name> <collector node> <base node> <emitter node>
 + [<thermal node>] <VBIC 1.3 3-terminal model name>

Q<name> <collector node> <base node> <emitter node>
 + substrate [<thermal node>] <VBIC 1.3 4-terminal model name>
```

**Model Form**

```
.MODEL <model name> NPN [model parameters]
.MODEL <model name> PNP [model parameters]
```

**Examples**

```
Q2 10 2 9 PNP1
Q12 14 2 0 1 NPN2 2.0
Q6 VC 4 11 [SUB] LAXPNP
Q6 Coll Base Emit DT VBICMODEL1
Q6 Coll Base Emit DT VBIC13MODEL2
Q6 Coll Base Emit VBIC13MODEL3
Q6 Coll Base Emit Subst DT VBIC13MODEL4
```

**Parameters and Options**

`substrate node`
: Optional and defaults to ground. Since **Xyce** permits alphanumeric node names and because there is no easy way to make a distinction between these and the model names, the name (not a number) used for the substrate node must be enclosed in square brackets `[ ]`. Otherwise, nodes would be interpreted as model names. See the fourth example above.

`area value`
: The relative device area with a default value of 1.

**Comments**

The BJT is modeled as an intrinsic transistor using ohmic resistances in series with the collector (RC/area), with the base (value varies with current, see

BJT equations) and with the emitter (RE/area).For model parameters with optional names, such as VAF and VA (the optional name is in parentheses), either may be used.For model types NPN and PNP, the isolation junction capacitance is connected between the intrinsic-collector and substrate nodes. This is the same as in SPICE and works well for vertical IC transistor structures.

**The VBIC 1.2 model requires a slightly different form of the instance line than does the level 1 BJT; this variant of the Q line is shown in the fourth example above.** VBIC 1.2 instance lines have four required nodes, the first three are the normal collector, base, and emitter, and the fourth node is for electrothermal effects. This fourth node, named "dt" in the VBIC literature, is the difference between the device temperature including self-heating and the baseline temperature of the device. The base temperature of the device is the sum of the ambient temperature of the simulation and the `DTEMP` model parameter. It is common to tie this "dt" node to ground using a large-value resistor and to use the node only for output to observe the device heating, but it can also be used to couple the thermal effects of several VBIC models.

**Beginning with Xyce 6.4, both the VBIC 1.3 and VBIC 1.2 models are available. The VBIC 1.3 model is provided in both 3-terminal (Q level 11) and 4-terminal (Q level 12) variants, both supporting electrothermal and excess-phase effects, and is slightly different in usage than the VBIC 1.2. These variants of the Q line are shown in the fifth through seventh examples above.** VBIC 1.3 instance lines have three or four required nodes, depending on model level, and an *optional* 'dt' node. The first three are the normal collector, base,and emitter. In the level 12 (4-terminal) the fourth node is the substrate, just as for the level 1 BJT. If the optional 'dt' node is specified for either variant, it can be used to view the local temperature rise due to self-heating, and could possibly be used to model coupled heating effects of several VBIC devices.

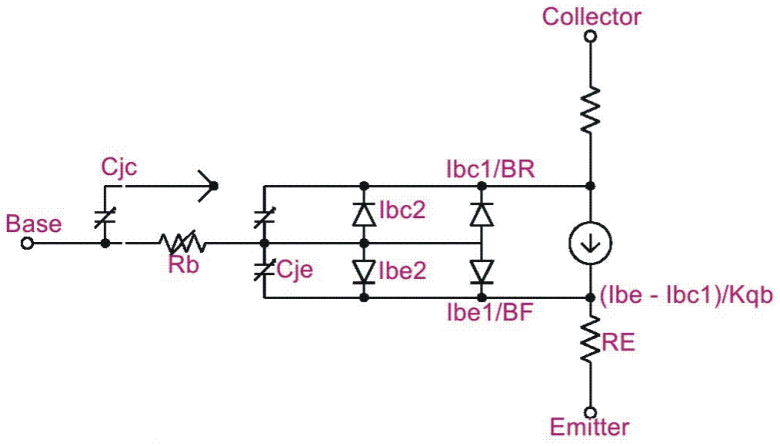


**Figure 2.1.** BJT model schematic. Adapted from reference [2].

## BJT Level selection

**Xyce** supports the level 1 BJT model, which is based on the documented standard SPICE 3F5 BJT model, but was coded independently at Sandia. It is mostly based on the classic Gummel-Poon BJT model [7].

Three variants of the VBIC model are provided as BJT levels 10-12. The level 10 is the 3-terminal, electrothermal, constant phase model of VBIC version 1.2 [8]. Levels 11 and 12 are the 3-terminal and 4-terminal variants of the VBIC 1.3.

The VBIC model supports both PNP and NPN transistors, and may therefore be used with model cards of type `PNP` and `NPN`.

An experimental release of the FBH HBT_X model version 2.1[9] is provided as BJT level 23.

The MEXTRAM[10] BJT model version 504.12.1 model is provided. Two variants of this model are available: the level 504 model without self-heating and without external substrate node, and the level 505 model with self heating but without external substrate node. The level 505 instance line requires a fourth node for the 'dt' node, similar to the usage in all of the VBIC models (levels 10-12), but is otherwise identical to the level 504 model.

## BJT Operating Temperature

Model parameters may be assigned unique measurement temperatures using the $\mathbf{TNOM}$ model parameter. See BJT model parameters for more information.

## BJT Power Calculations

Power dissipated in the transistor is calculated with $|I_B * V_{BE}| + |I_C * V_{CE}|$ where $I_B$ is the base current, $I_C$ is the collector current, $V_{BE}$ is the voltage drop between the base and the emitter and $V_{CE}$ is the voltage drop between the collector and the emitter. This formula may differ from other simulators, such as HSpice.

## Level=1 Instance Parameters

Table 2.48 gives the available instance parameters for the level 1 BJT.

Table 2.48: Bipolar Junction Transistor Device Instance Parameters

| Parameter | Description | Units | Default |
|---|---|---|---|
| `AREA` | Relative device area | – | 1 |
| `IC1` | Vector of initial values: Vbe,Vce. Vbe=IC1 | V | 0 |
| `IC2` | Vector of initial values: Vbe,Vce. Vce=IC2 | V | 0 |
| `LAMBERTW` | Flag for toggling the use of the lambert-W function instead of exponentials. | logical (T/F) | false |
| `OFF` | Initial condition of no voltage drops accross device | logical (T/F) | false |

Table 2.48: Bipolar Junction Transistor Device Instance Parameters

| Parameter | Description | Units | Default |
|---|---|---|---|
| TEMP | Device temperature | °C | Ambient Temperature |

## Level=1 Model Parameters

Table 2.49 gives the available model parameters for the level 1 BJT.

Table 2.49: Bipolar Junction Transistor Device Model Parameters

| Parameter | Description | Units | Default |
|---|---|---|---|
| AF | Flicker noise exponent | — | 1 |
| BF | Ideal maximum foward beta | – | 100 |
| BFM | Ideal maximum foward beta | – | 100 |
| BR | Ideal maximum reverse beta | – | 1 |
| BRM | Ideal maximum reverse beta | – | 1 |
| BV | Reverse early voltage | V | 0 |
| C2 | Coefficient for base-emitter leak current. | — | 0 |
| C4 | Coefficient for base-collector leak current. | — | 0 |
| CCS | Substrate zero-bias p-n capacitance | F | 0 |
| CDIS | Fraction of CJC connected internally to RB | – | 1 |
| CJC | Base-collector zero-bias p-n capacitance | F | 0 |
| CJE | Base-emitter zero-bias p-n capacitance | F | 0 |
| CJS | Substrate zero-bias p-n capacitance | F | 0 |
| CSUB | Substrate zero-bias p-n capacitance | F | 0 |
| EG | Bandgap voltage (barrier highth) | eV | 1.11 |
| ESUB | Substrate p-n grading factor | – | 0 |
| FC | Foward-bias depletion capacitor coefficient | – | 0.5 |
| IK | Corner for foward-beta high-current roll-off | A | 0 |
| IKF | Corner for foward-beta high-current roll-off | A | 0 |
| IKR | Corner for reverse-beta high-current roll-off | A | 0 |
| IOB | Current at which RB falls off by half | A | 0 |
| IRB | Current at which RB falls off by half | A | 0 |
| IS | Transport saturation current | A | 1e-16 |
| ISC | Base-collector leakage saturation current | A | 0 |
| ISE | Base-emitter leakage saturation current | A | 0 |

Table 2.49: Bipolar Junction Transistor Device Model Parameters

| Parameter | Description | Units | Default |
|---|---|---|---|
| ITF | Transit time dependancy on IC | — | 0 |
| JBF | Corner for foward-beta high-current roll-off | A | 0 |
| JBR | Corner for reverse-beta high-current roll-off | A | 0 |
| JLC | Base-collector leakage saturation current | A | 0 |
| JLE | Base-emitter leakage saturation current | A | 0 |
| JRB | Current at which RB falls off by half | A | 0 |
| JTF | Transit time dependancy on IC | — | 0 |
| KF | Flicker noise coefficient | – | 0 |
| MC | Base-collector p-n grading factor | – | 0.33 |
| ME | Base-emitter p-n grading factor | – | 0.33 |
| MJC | Base-collector p-n grading factor | – | 0.33 |
| MJE | Base-emitter p-n grading factor | – | 0.33 |
| MJS | Substrate p-n grading factor | – | 0 |
| MS | Substrate p-n grading factor | – | 0 |
| NC | Base-collector leakage emission coefficient | – | 2 |
| NE | Base-emitter leakage emission coefficient | – | 1.5 |
| NF | Foward current emission coefficient | – | 1 |
| NK | High current rolloff coefficient | – | 0.5 |
| NKF | High current rolloff coefficient | – | 0.5 |
| NLE | Base-emitter leakage emission coefficient | – | 1.5 |
| NR | Reverse current emission coefficient | – | 1 |
| PC | Base-collector built-in potential | V | 0.75 |
| PE | Base-emitter built-in potential | V | 0.75 |
| PS | Substrate built-in potential | V | 0.75 |
| PSUB | Substrate built-in potential | V | 0.75 |
| PT | Temperature exponent for IS. (synonymous with XTI) | — | 3 |
| PTF | Excess Phase at 1/(2pi*TF) Hz | degree | 0 |
| RB | Zero-bias (maximum) base resistance | Ω | 0 |
| RBM | Maximum base resistance | Ω | 0 |
| RC | Collector ohmic resistance | Ω | 0 |
| RE | Emitter ohmic resistance | Ω | 0 |
| TB | Foward and reverse beta temperature coefficient | – | 0 |
| TCB | Foward and reverse beta temperature coefficient | – | 0 |

Table 2.49: Bipolar Junction Transistor Device Model Parameters

| Parameter | Description | Units | Default |
|---|---|---|---|
| TEMPMODEL | Specifies the type of parameter interpolation over temperature | – | 'NONE' |
| TF | Ideal foward transit time | s | 0 |
| TNOM | Parameter measurement temperature | °C | Ambient Temperature |
| TR | Ideal reverse transit time | s | 0 |
| VA | Foward early voltage | V | 0 |
| VAF | Foward early voltage | V | 0 |
| VAR | Reverse early voltage | V | 0 |
| VB | Reverse early voltage | V | 0 |
| VBF | Foward early voltage | V | 0 |
| VJC | Base-collector built-in potential | V | 0.75 |
| VJE | Base-emitter built-in potential | V | 0.75 |
| VJS | Substrate built-in potential | V | 0.75 |
| VRB | Reverse early voltage | V | 0 |
| VTF | Transit time dependancy on Vbc | V | 0 |
| XCJC | Fraction of CJC connected internally to RB | – | 1 |
| XTB | Foward and reverse beta temperature coefficient | – | 0 |
| XTF | Transit time bias dependence coefficient | – | 0 |
| XTI | Temperature exponent for IS. (synonymous with PT) | — | 3 |

## VBIC transistor model

The VBIC (Q levels 10, 11, and 12) model all support a self-heating model. The model works by computing the power dissipated by all branches of the device, applying this power as a flow through a small thermal network consisting of a power flow ("current") source through a thermal resistance and thermal capacitance, as shown in Figure 2.2. The circuit node DT will therefore be the "thermal potential" (temperature) across the parallel thermal resistance and capacitance. This temperature is the temperature rise due to self heating of the device, which is added to the ambient temperature and DTEMP parameter to obtain the device operating temperature.

In VBIC 1.2, the dt node must always be specified on the netlist line, and thermal power is always sourced into this node. If a node name other than ground is given, then the "voltage" on this node is the temperature rise due to self heating. If the ground node is used for the fourth node on the netlist line, then the self-heating effect is diabled — the voltage rise is always zero.

In VBIC 1.3, the dt node is optional on the netlist line. If not given, the dt node is used internally

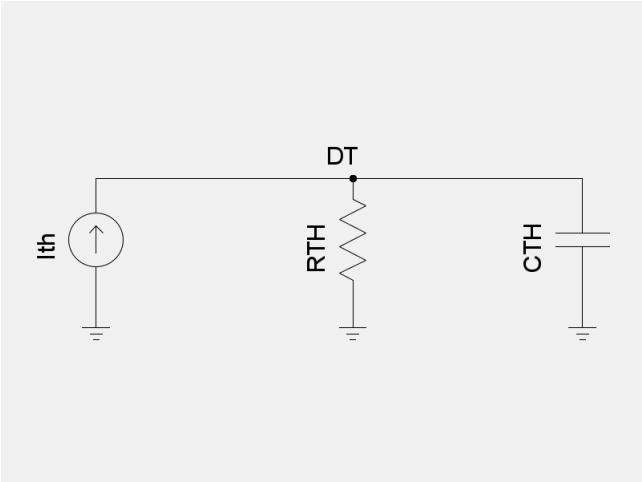


**Figure 2.2.** VBIC thermal network schematic.

for thermal effects calculations, but not accessible from the rest of the netlist. Unlike VBIC 1.2, the VBIC 1.3 provides an instance parameter `SW_ET` that may be set to zero to turn off electrothermal self-heating effects. When set to zero, no thermal power is sourced into the dt node. This parameter defaults to 1, meaning that thermal power is computed and flows into dt even when dt is unspecified on the netlist and remains an internal node.

In both VBIC 1.2 and VBIC 1.3, setting RTH to zero does *NOT* disable the self-heating model, and does not short the dt node to ground, even though one might expect that to be the behavior. Rather, it simply removes the RTH resistor from the equivalent circuit of figure 2.2 and leaves the dt node floating. This is an important point to recognize when using the VBIC.

If a node name is given as the fourth node of a VBIC **Xyce** will emit warnings about the node not having a DC path to ground and being connected to only one device. These warnings may safely be ignored, and are an artifact of Xyce's connectivity checker. It is possible to silence this warning by adding a very large resistance between the dt node and ground — 1GOhm or 1TOhm are effectively the same as leaving the node floating, and will satisfy the connectivity checker's tests. This is safe *if and only if a nonzero* `RTH` *value is specified for the device.* If, however, RTH is zero, then dt is otherwise floating and your external resistance now becomes the primary path for thermal power flow, and rather than turning off self-heating effects, it will be as if you had set RTH to a very large value.

The **Xyce** team therefore makes the following recommendations for VBIC users:

- The VBIC 1.3 model should be used in preference to the VBIC 1.2 wherever possible. This model is more recent and is far more robust. VBIC 1.2 parameter extractions will work well in VBIC 1.3, with minor changes. VBIC 1.2 may be deprecated and ultimately removed in future versions of Xyce.
- If not using the dt node as a way of thermally coupling devices to each other, leave it off of VBIC 1.3 instance lines, allowing it to be an internal variable. This will silence any connec-

tivity warnings from Xyce. Since the dt node may be printed using the N() syntax even when internal, it is unnecessary to put a dt node on the instance line just to print the local temperature rise due to self-heating. The only reasons to include it on the instance line would be for backward compatibility to VBIC 1.2 netlists, or to implement a thermal coupling network between devices.

- Since VBIC 1.2 requires a non-ground dt node in order to enable electrothermal effects, if you must use VBIC 1.2 then the best approach is to ignore the warnings about the connectivity of the dt node.
- If you want to turn off all electrothermal effects in the VBIC 1.3, set the `SW_ET` parameter to zero, and do not include dt in the node list.
- If you want to turn off all electrothermal effects in VBIC 1.2, use 0 (ground) for the dt node (fourth node).
- If you set RTH to zero in VBIC 1.2, you should also ground the dt node, otherwise it will float and likely lead to convergence problems.
- If using a non-ground dt node on VBIC 1.2, and you really need to silence the connectivity warnings, tie this node to ground through a very large (1G or 1T) resistor. But never use this method when RTH is zero.

### Level=10 instance parameters

The VBIC (level 10 transistor) supports a single instance parameter, `M` (Multiplicity). This parameter emulates an integer number of identical VBIC transistors connected in parallel. At this time, the VBIC is the only `Q` device that supports a multiplicity instance parameter. The level 1 `Q` device instead supports an `AREA` instance parameter that can be used for the same purpose.

### Level=10 model parameters

Table 2.50 gives the available device instance parameters and 2.51 gives the available model parameters for the level 10 BJT (VBIC 1.2, 3-terminal, electrothermal, no excess-phase).

Table 2.50: VBIC 3T et cf v1.2 Device Instance Parameters

| Parameter | Description | Units | Default |
|---|---|---|---|
| `DTEMP` | Device temperature (use 0.0 for ambient) | – | 0 |
| `M` | Number of devices in parallel | – | 1 |

Table 2.51: VBIC 3T et cf v1.2 Device Model Parameters

| Parameter | Description | Units | Default |
|---|---|---|---|
| `AFN` | Base-Emitter Flicker Noise coefficient (unused) | – | 1 |
| `AJC` | Base-Collector capacitor smoothing factor | – | -0.5 |
| `AJE` | Base-Emitter capacitor smoothing factor | – | -0.5 |

Table 2.51: VBIC 3T et cf v1.2 Device Model Parameters

| Parameter | Description | Units | Default |
|---|---|---|---|
| AJS | Substrate-collector capacitor smoothing factor (unused) | – | -0.5 |
| ART | | – | 0.1 |
| AVC1 | B-C weak avalanche parameter | $V^{-1}$ | 0 |
| AVC2 | B-C weak avalanche parameter | $V^{-1}$ | 0 |
| BFN | B-E flicker noise dependence (unused) | – | 1 |
| CBCO | Extrinsic B-C overlap capacitance | F | 0 |
| CBEO | Extrinsic B-E overlap capacitance | F | 0 |
| CCSO | (unused) | – | 0 |
| CJC | B-C zero-bias capacitance | F | 0 |
| CJCP | S-C zero-bias capacitance | F | 0 |
| CJE | B-E zero-bias capacitance | F | 0 |
| CJEP | S-E zero-bias capacitance | F | 0 |
| CTH | Thermal capacitance | F | 0 |
| DEAR | Activation energy for ISRR | – | 0 |
| DTEMP | Device temperature (use 0.0 for ambient) | – | 0 |
| EA | Activation energy for IS | eV | 1.12 |
| EAIC | Activation energy for IBCI | eV | 1.12 |
| EAIE | Activation energy for IBEI | eV | 1.12 |
| EAIS | Activation energy for IBCIP | eV | 1.12 |
| EANC | Activation energy for IBCN | eV | 1.12 |
| EANE | Activation energy for IBEN | eV | 1.12 |
| EANS | Activation energy for IBCNP | eV | 1.12 |
| EAP | Activation energy for ISP | – | 1.12 |
| EBBE | (unused) | – | 0 |
| FC | Forward-bias depletion capacitance limit | – | 0.9 |
| GAMM | Epi doping parameter | – | 0 |
| HRCF | High current RC factor | – | 0 |
| IBBE | | – | 1e-06 |
| IBCI | Ideal B-C saturation current | A | 1e-16 |
| IBCIP | Ideal parasitic B-C saturation current | A | 0 |
| IBCN | Nonideal B-C saturation current | A | 0 |
| IBCNP | Nonideal parasitic B-C saturation current | A | 0 |
| IBEI | Ideal B-E saturation current | A | 1e-18 |
| IBEIP | Ideal parasitic B-E saturation current | A | 0 |

Table 2.51: VBIC 3T et cf v1.2 Device Model Parameters

| Parameter | Description | Units | Default |
|---|---|---|---|
| IBEN | Nonideal B-E saturation current | A | 0 |
| IBENP | Nonideal parasitic B-E saturation current | A | 0 |
| IKF | Forward knee current | A | 0 |
| IKP | Parasitic knee current | A | 0 |
| IKR | Reverse knee current | A | 0 |
| IS | Transport saturation current | A | 1e-16 |
| ISP | Parasitic transport saturation current | A | 0 |
| ISRR | Saturation current for reverse operation | – | 1 |
| ITF | Coefficient of tf dependence on Ic | – | 0 |
| KFN | B-E flicker (1/f) noise coefficient (unused) | – | 0 |
| MC | B-C grading coefficient | – | 0.33 |
| ME | B-E grading coefficient | – | 0.33 |
| MS | S-C grading coefficient | – | 0.33 |
| NBBE | | – | 1 |
| NCI | Ideal B-C emission coefficient | – | 1 |
| NCIP | Ideal parasitic B-C emission coefficient | – | 1 |
| NCN | Non-ideal B-C emission coefficient | – | 2 |
| NCNP | Non-ideal parasitic B-C emission coefficient | – | 2 |
| NEI | Ideal B-E emission coefficient | – | 1 |
| NEN | Non-ideal B-E emission coefficient | – | 2 |
| NF | Forward emission coefficient | – | 1 |
| NFP | Parasitic forward emission coefficient | – | 1 |
| NKF | | – | 0.5 |
| NR | Reverse emission coefficient | – | 1 |
| PC | B-C built-in potential | – | 0.75 |
| PE | B-E built-in potential | – | 0.75 |
| PS | S-C built-in potential | – | 0.75 |
| QBM | | – | 0 |
| QCO | Epi charge parameter | C | 0 |
| QTF | Variation of tf with base width modulation | – | 0 |
| RBI | Intrinsic base resistance | Ω | 0 |
| RBP | Parasitic base resistance | Ω | 0 |
| RBX | Extrinsic base resistance | Ω | 0 |
| RCI | Intrinsic Collector resistance | Ω | 0 |
| RCX | Extrinsic Collector resistance | Ω | 0 |

Table 2.51: VBIC 3T et cf v1.2 Device Model Parameters

| Parameter | Description | Units | Default |
|---|---|---|---|
| RE | Emitter resistance | Ω | 0 |
| RS | Substrate resistance | Ω | 0 |
| RTH | Thermal resistance, must be given for self-heating | Ω | 0 |
| TAVC | Temperature coefficient of Avc2 | – | 0 |
| TD | Forward excess-phase delay time (unused in this version) | – | 0 |
| TF | Forward transit time | s | 0 |
| TNBBE | | – | 0 |
| TNF | Temperature coefficient of Nf | – | 0 |
| TNOM | Nominal temperature | °C | 27 |
| TR | Reverse transit time | – | 0 |
| TVBBE1 | | – | 0 |
| TVBBE2 | | – | 0 |
| VBBE | | – | 0 |
| VEF | Forward Early voltage | V | 0 |
| VER | Reverse Early voltage | V | 0 |
| VERS | Version of this VBIC model | – | 1.2 |
| VO | Epi drift saturation voltage | V | 0 |
| VREV | | – | 0 |
| VRT | | – | 0 |
| VTF | Coefficient of tf dependence on Vbc | – | 0 |
| WBE | Portion of Ibei from Vbei | – | 1 |
| WSP | Portion of Iccp from Vbep | – | 1 |
| XII | Temperature exponent of Ibei, Ibci, Ibeip, and Ibcip | – | 3 |
| XIKF | | – | 0 |
| XIN | Temperature exponent of Iben, Ibcn, Ibenp, and Ibcnp | – | 3 |
| XIS | Temperature exponent of IS | – | 3 |
| XISR | Temperature exponent of ISRR | – | 0 |
| XRBI | | – | 0 |
| XRBP | | – | 0 |
| XRBX | | – | 0 |
| XRCI | | – | 0 |
| XRCX | | – | 0 |

Table 2.51: VBIC 3T et cf v1.2 Device Model Parameters

| Parameter | Description | Units | Default |
|---|---|---|---|
| XRE | Temperature exponent of re | – | 0 |
| XRS | Temperature exponent of rs | – | 0 |
| XTF | Coefficient of tf with bias dependence | – | 0 |
| XVO | Temperature exponent of vo | – | 0 |

## Level=11 and Level=12 parameters

The VBIC 1.3 (level 11 transistor for 3-terminal, level 12 for 4-terminal) supports a number of instance parameters that are not available in the VBIC 1.2. The level 11 and level 12 differ only by the number of required nodes. The level 11 is the 3-terminal device, having only collector, base, and emitter as required nodes. The level 12 is the 4-terminal device, requiring collector, base, emitter and substrate nodes. Both models support an optional 'dt' node as their last node on the instance line.

**Model cards extracted for the VBIC 1.2 will mostly work with the VBIC 1.3, with one notable exception:** in VBIC 1.2 the DTEMP parameter was a model parameter, and **Xyce** allowed it also to be specified on the instance line, overriding whatever was specified in the model. This parameter was replaced in VBIC 1.3 with the TRISE parameter, which is *only* an instance parameter. DTEMP and DTA are both supported as aliases for the TRISE instance parameter.

Table 2.52 gives the available device instance parameters and 2.54 gives the available model parameters for the level 11 BJT (VBIC 1.3, 3-terminal).

Table 2.53 gives the available device instance parameters and 2.55 gives the available model parameters for the level 11 BJT (VBIC 1.3, 4-terminal).

Table 2.52: VBIC 1.3 3T Device Instance Parameters

| Parameter | Description | Units | Default |
|---|---|---|---|
| DTA | Alias for trise | °C | 0 |
| DTEMP | Alias for trise | °C | 0 |
| M | multiplicity factor | — | 1 |
| SW_ET | switch for self-heating: 0=no and 1=yes | — | 1 |
| SW_NOISE | switch for including noise: 0=no and 1=yes | — | 1 |
| TRISE | local temperature delta to ambient (before self-heating) | °C | 0 |

Table 2.53: VBIC 1.3 4T Device Instance Parameters

| Parameter | Description | Units | Default |
|---|---|---|---|
| DTA | Alias for trise | °C | 0 |

Table 2.53: VBIC 1.3 4T Device Instance Parameters

| Parameter | Description | Units | Default |
|---|---|---|---|
| DTEMP | Alias for trise | °C | 0 |
| M | multiplicity factor | — | 1 |
| SW_ET | switch for self-heating: 0=no and 1=yes | — | 1 |
| SW_NOISE | switch for including noise: 0=no and 1=yes | — | 1 |
| TRISE | local temperature delta to ambient (before self-heating) | °C | 0 |

Table 2.54: VBIC 1.3 3T Device Model Parameters

| Parameter | Description | Units | Default |
|---|---|---|---|
| ABK | SiGe base current kink exponent | — | 1 |
| AFN | b-e flicker noise current exponent | — | 1 |
| AJC | b-c capacitance smoothing factor | — | -0.5 |
| AJE | b-e capacitance smoothing factor | — | -0.5 |
| AJS | c-s capacitance smoothing factor | — | -0.5 |
| ART | smoothing parameter for reach-through | — | 0.1 |
| AVC1 | b-c weak avalanche parameter 1 | $V^{-1}$ | 0 |
| AVC2 | b-c weak avalanche parameter 2 | — | 0 |
| AVCX1 | bx-cx weak avalanche parameter 1 | $V^{-1}$ | 0 |
| AVCX2 | bx-cx weak avalanche parameter 2 | — | 0 |
| BBK | SiGe base current kink current factor | A | 0 |
| BFN | b-e flicker noise 1/f exponent | — | 1 |
| CBCO | extrinsic b-c overlap capacitance | F | 0 |
| CBEO | extrinsic b-e overlap capacitance | F | 0 |
| CCSO | extrinsic c-s overlap capacitance | F | 0 |
| CJC | zero-bias b-c depletion capacitance | F | 0 |
| CJCP | zero-bias extrinsic c-s depletion capacitance | F | 0 |
| CJE | zero-bias b-e depletion capacitance | F | 0 |
| CJEP | zero-bias extrinsic b-c depletion capacitance | F | 0 |
| CTH | thermal capacitance | — | 0 |
| DEAR | delta activation energy for isrr | V | 0 |
| EA | activation energy for is | V | 1.12 |
| EAIC | activation energy for ibci and ibeip | V | 1.12 |
| EAIE | activation energy for ibei | V | 1.12 |
| EAIS | activation energy for ibcip | V | 1.12 |
| EANC | activation energy for ibcn and ibenp | V | 1.12 |

Table 2.54: VBIC 1.3 3T Device Model Parameters

| Parameter | Description | Units | Default |
|---|---|---|---|
| EANE | activation energy for iben | V | 1.12 |
| EANS | activation energy for ibcnp | V | 1.12 |
| EAP | activation energy for isp | V | 1.12 |
| FC | forward bias depletion capacitance limit | — | 0.9 |
| GAMM | epi doping parameter | — | 0 |
| GMIN | minimum conductance | $\Omega^{-1}$ | 1e-12 |
| HRCF | high current collector resistance factor | — | 0 |
| IBBE | b-e breakdown current | A | 1e-06 |
| IBCI | ideal b-c saturation current | A | 1e-16 |
| IBCIP | ideal parasitic b-c saturation current | A | 0 |
| IBCN | non-ideal b-c saturation current | A | 0 |
| IBCNP | non-ideal parasitic b-c saturation current | A | 0 |
| IBEI | ideal b-e saturation current | A | 1e-18 |
| IBEIP | ideal parasitic b-e saturation current | A | 0 |
| IBEN | non-ideal b-e saturation current | A | 0 |
| IBENP | non-ideal parasitic b-e saturation current | A | 0 |
| IBK0 | SiGe base current kink current reference | A | 0 |
| IKF | forward knee current (zero=infinite) | A | 0 |
| IKP | parasitic knee current (zero=infinite) | A | 0 |
| IKR | reverse knee current (zero=infinite) | A | 0 |
| IS | transport saturation current | A | 1e-16 |
| ISP | parasitic transport saturation current | A | 0 |
| ISRR | ratio of is(reverse) to is(forward) | — | 1 |
| ITF | tf coefficient of Ic dependence | A | 0 |
| KFN | b-e flicker noise constant | — | 0 |
| MAXEXP | argument at which to linearize general exponentials | — | 1e+22 |
| MC | b-c grading coefficient | — | 0.33 |
| MCX | bx-cx grading coefficient for avalanche | — | 0.33 |
| ME | b-e grading coefficient | — | 0.33 |
| MS | c-s grading coefficient | — | 0.33 |
| NBBE | b-e breakdown emission coefficient | — | 1 |
| NCI | ideal b-c emission coefficient | — | 1 |
| NCIP | ideal parasitic b-c emission coefficient | — | 1 |
| NCN | non-ideal b-c emission coefficient | — | 2 |

Table 2.54: VBIC 1.3 3T Device Model Parameters

| Parameter | Description | Units | Default |
|---|---|---|---|
| NCNP | non-ideal parasitic b-c emission coefficient | — | 2 |
| NEI | ideal b-e emission coefficient | — | 1 |
| NEN | non-ideal b-e emission coefficient | — | 2 |
| NF | fwd emission coefficient (ideality factor) | — | 1 |
| NFP | parasitic emission coeff (ideality factor) | — | 1 |
| NKF | high current beta roll-off parameter | — | 0.5 |
| NPN | npn transistor type | — | 0 |
| NR | rev emission coefficient (ideality factor) | — | 1 |
| PC | b-c built-in potential | V | 0.75 |
| PE | b-e built-in potential | V | 0.75 |
| PNJMAXI | current at which to linearize diode currents | A | 1 |
| PNP | pnp transistor type | — | 0 |
| PS | c-s built-in potential | V | 0.75 |
| QBM | base charge model selection switch: 0=GP and 1=SGP | — | 0 |
| QCO | epi charge parameter | C | 0 |
| QNIBEIR | ideal b-e quasi-neutral base recombination parameter | — | 0 |
| QTF | variation of tf with base-width modulation | — | 0 |
| RBI | intrinsic base resistance | Ω | 0 |
| RBP | parasitic transistor base resistance | Ω | 0 |
| RBX | extrinsic base resistance | Ω | 0 |
| RCI | intrinsic collector resistance | Ω | 0 |
| RCX | extrinsic collector resistance | Ω | 0 |
| RE | extrinsic emitter resistance | Ω | 0 |
| RS | extrinsic substrate resistance | Ω | 0 |
| RTH | thermal resistance | — | 0 |
| SCALE | scale factor for instance geometries | — | 1 |
| SHRINK | shrink percentage for instance geometries | — | 0 |
| TAVC | temperature exponent of avc2 | $^{\circ}C^{-1}$ | 0 |
| TAVCX | temperature exponent of avcx2 | $^{\circ}C^{-1}$ | 0 |
| TCRTH | temperature exponent of rth | $^{\circ}C^{-1}$ | 0 |
| TCVEF | temperature exponent of vef | $^{\circ}C^{-1}$ | 0 |
| TCVER | temperature exponent of ver | $^{\circ}C^{-1}$ | 0 |
| TD | forward excess-phase delay time | s | 0 |

Table 2.54: VBIC 1.3 3T Device Model Parameters

| Parameter | Description | Units | Default |
|---|---|---|---|
| TF | forward transit time | s | 0 |
| TMAX | maximum ambient temperature | °C | 500 |
| TMAXCLIP | clip maximum temperature | °C | 500 |
| TMIN | minimum ambient temperature | °C | -100 |
| TMINCLIP | clip minimum temperature | °C | -100 |
| TNBBE | temperature coefficient of nbbe | $°C^{-1}$ | 0 |
| TNF | temperature exponent of nf and nr | $°C^{-1}$ | 0 |
| TNOM | nominal (reference) temperature | °C | 27 |
| TR | reverse transit time | s | 0 |
| TVBBE1 | linear temperature coefficient of vbbe | $°C^{-1}$ | 0 |
| TVBBE2 | quadratic temperature coefficient of vbbe | — | 0 |
| TYPE | transistor type: -1=npn and +1=pnp (overriden by npn or pnp) | — | -1 |
| VBBE | b-e breakdown voltage | V | 0 |
| VEF | forward Early voltage (zero=infinite) | V | 0 |
| VER | reverse Early voltage (zero=infinite) | V | 0 |
| VO | epi drift saturation voltage | V | 0 |
| VPTE | SiGe base current kink voltage | V | 0 |
| VRT | reach-through voltage for Cbc limiting | V | 0 |
| VTF | tf coefficient of Vbci dependence | V | 0 |
| WBE | partitioning of Ibe/Ibex and Qbe/Qbex | — | 1 |
| WSP | partitioning of Iccp between Vbep and Vbci | — | 1 |
| XII | temperature exponent of ibei, ibci, ibeip, ibcip | — | 3 |
| XIKF | temperature exponent of ikf | — | 0 |
| XIN | temperature exponent of iben, ibcn, ibenp, ibcnp | — | 3 |
| XIS | temperature exponent of is | — | 3 |
| XISR | temperature exponent for isrr | — | 0 |
| XRB | temperature exponent of rbx and rbi | — | 0 |
| XRBI | temperature exponent of rbi (overrides xrb) | — | 0 |
| XRBP | temperature exponent of rbp (overrides xrc) | — | 0 |
| XRBX | temperature exponent of rbx (overrides xrb) | — | 0 |
| XRC | temperature exponent of rci and rcx and rbp | — | 0 |
| XRCI | temperature exponent of rci (overrides xrc) | — | 0 |
| XRCX | temperature exponent of rcx (overrides xrc) | — | 0 |
| XRE | temperature exponent of re | — | 0 |

Table 2.54: VBIC 1.3 3T Device Model Parameters

| Parameter | Description | Units | Default |
|---|---|---|---|
| XRS | temperature exponent of rs | — | 0 |
| XTF | tf bias dependence coefficient | — | 0 |
| XVO | temperature exponent of vo | — | 0 |

Table 2.55: VBIC 1.3 4T Device Model Parameters

| Parameter | Description | Units | Default |
|---|---|---|---|
| ABK | SiGe base current kink exponent | — | 1 |
| AFN | b-e flicker noise current exponent | — | 1 |
| AJC | b-c capacitance smoothing factor | — | -0.5 |
| AJE | b-e capacitance smoothing factor | — | -0.5 |
| AJS | c-s capacitance smoothing factor | — | -0.5 |
| ART | smoothing parameter for reach-through | — | 0.1 |
| AVC1 | b-c weak avalanche parameter 1 | $V^{-1}$ | 0 |
| AVC2 | b-c weak avalanche parameter 2 | — | 0 |
| AVCX1 | bx-cx weak avalanche parameter 1 | $V^{-1}$ | 0 |
| AVCX2 | bx-cx weak avalanche parameter 2 | — | 0 |
| BBK | SiGe base current kink current factor | A | 0 |
| BFN | b-e flicker noise 1/f exponent | — | 1 |
| CBCO | extrinsic b-c overlap capacitance | F | 0 |
| CBEO | extrinsic b-e overlap capacitance | F | 0 |
| CCSO | extrinsic c-s overlap capacitance | F | 0 |
| CJC | zero-bias b-c depletion capacitance | F | 0 |
| CJCP | zero-bias extrinsic c-s depletion capacitance | F | 0 |
| CJE | zero-bias b-e depletion capacitance | F | 0 |
| CJEP | zero-bias extrinsic b-c depletion capacitance | F | 0 |
| CTH | thermal capacitance | — | 0 |
| DEAR | delta activation energy for isrr | V | 0 |
| EA | activation energy for is | V | 1.12 |
| EAIC | activation energy for ibci and ibeip | V | 1.12 |
| EAIE | activation energy for ibei | V | 1.12 |
| EAIS | activation energy for ibcip | V | 1.12 |
| EANC | activation energy for ibcn and ibenp | V | 1.12 |
| EANE | activation energy for iben | V | 1.12 |
| EANS | activation energy for ibcnp | V | 1.12 |

Table 2.55: VBIC 1.3 4T Device Model Parameters

| Parameter | Description | Units | Default |
|---|---|---|---|
| EAP | activation energy for isp | V | 1.12 |
| FC | forward bias depletion capacitance limit | — | 0.9 |
| GAMM | epi doping parameter | — | 0 |
| GMIN | minimum conductance | $\Omega^{-1}$ | 1e-12 |
| HRCF | high current collector resistance factor | — | 0 |
| IBBE | b-e breakdown current | A | 1e-06 |
| IBCI | ideal b-c saturation current | A | 1e-16 |
| IBCIP | ideal parasitic b-c saturation current | A | 0 |
| IBCN | non-ideal b-c saturation current | A | 0 |
| IBCNP | non-ideal parasitic b-c saturation current | A | 0 |
| IBEI | ideal b-e saturation current | A | 1e-18 |
| IBEIP | ideal parasitic b-e saturation current | A | 0 |
| IBEN | non-ideal b-e saturation current | A | 0 |
| IBENP | non-ideal parasitic b-e saturation current | A | 0 |
| IBK0 | SiGe base current kink current reference | A | 0 |
| IKF | forward knee current (zero=infinite) | A | 0 |
| IKP | parasitic knee current (zero=infinite) | A | 0 |
| IKR | reverse knee current (zero=infinite) | A | 0 |
| IS | transport saturation current | A | 1e-16 |
| ISP | parasitic transport saturation current | A | 0 |
| ISRR | ratio of is(reverse) to is(forward) | — | 1 |
| ITF | tf coefficient of Ic dependence | A | 0 |
| KFN | b-e flicker noise constant | — | 0 |
| MAXEXP | argument at which to linearize general exponentials | — | 1e+22 |
| MC | b-c grading coefficient | — | 0.33 |
| MCX | bx-cx grading coefficient for avalanche | — | 0.33 |
| ME | b-e grading coefficient | — | 0.33 |
| MS | c-s grading coefficient | — | 0.33 |
| NBBE | b-e breakdown emission coefficient | — | 1 |
| NCI | ideal b-c emission coefficient | — | 1 |
| NCIP | ideal parasitic b-c emission coefficient | — | 1 |
| NCN | non-ideal b-c emission coefficient | — | 2 |
| NCNP | non-ideal parasitic b-c emission coefficient | — | 2 |
| NEI | ideal b-e emission coefficient | — | 1 |

Table 2.55: VBIC 1.3 4T Device Model Parameters

| Parameter | Description | Units | Default |
|---|---|---|---|
| NEN | non-ideal b-e emission coefficient | — | 2 |
| NF | fwd emission coefficient (ideality factor) | — | 1 |
| NFP | parasitic emission coeff (ideality factor) | — | 1 |
| NKF | high current beta roll-off parameter | — | 0.5 |
| NPN | npn transistor type | — | 0 |
| NR | rev emission coefficient (ideality factor) | — | 1 |
| PC | b-c built-in potential | V | 0.75 |
| PE | b-e built-in potential | V | 0.75 |
| PNJMAXI | current at which to linearize diode currents | A | 1 |
| PNP | pnp transistor type | — | 0 |
| PS | c-s built-in potential | V | 0.75 |
| QBM | base charge model selection switch: 0=GP and 1=SGP | — | 0 |
| QCO | epi charge parameter | C | 0 |
| QNIBEIR | ideal b-e quasi-neutral base recombination parameter | — | 0 |
| QTF | variation of tf with base-width modulation | — | 0 |
| RBI | intrinsic base resistance | Ω | 0 |
| RBP | parasitic transistor base resistance | Ω | 0 |
| RBX | extrinsic base resistance | Ω | 0 |
| RCI | intrinsic collector resistance | Ω | 0 |
| RCX | extrinsic collector resistance | Ω | 0 |
| RE | extrinsic emitter resistance | Ω | 0 |
| RS | extrinsic substrate resistance | Ω | 0 |
| RTH | thermal resistance | — | 0 |
| SCALE | scale factor for instance geometries | — | 1 |
| SHRINK | shrink percentage for instance geometries | — | 0 |
| TAVC | temperature exponent of avc2 | $^{\circ}C^{-1}$ | 0 |
| TAVCX | temperature exponent of avcx2 | $^{\circ}C^{-1}$ | 0 |
| TCRTH | temperature exponent of rth | $^{\circ}C^{-1}$ | 0 |
| TCVEF | temperature exponent of vef | $^{\circ}C^{-1}$ | 0 |
| TCVER | temperature exponent of ver | $^{\circ}C^{-1}$ | 0 |
| TD | forward excess-phase delay time | s | 0 |
| TF | forward transit time | s | 0 |
| TMAX | maximum ambient temperature | °C | 500 |

Table 2.55: VBIC 1.3 4T Device Model Parameters

| Parameter | Description | Units | Default |
|---|---|---|---|
| TMAXCLIP | clip maximum temperature | °C | 500 |
| TMIN | minimum ambient temperature | °C | -100 |
| TMINCLIP | clip minimum temperature | °C | -100 |
| TNBBE | temperature coefficient of nbbe | $°C^{-1}$ | 0 |
| TNF | temperature exponent of nf and nr | $°C^{-1}$ | 0 |
| TNOM | nominal (reference) temperature | °C | 27 |
| TR | reverse transit time | s | 0 |
| TVBBE1 | linear temperature coefficient of vbbe | $°C^{-1}$ | 0 |
| TVBBE2 | quadratic temperature coefficient of vbbe | — | 0 |
| TYPE | transistor type: -1=npn and +1=pnp (overriden by npn or pnp) | — | -1 |
| VBBE | b-e breakdown voltage | V | 0 |
| VEF | forward Early voltage (zero=infinite) | V | 0 |
| VER | reverse Early voltage (zero=infinite) | V | 0 |
| VO | epi drift saturation voltage | V | 0 |
| VPTE | SiGe base current kink voltage | V | 0 |
| VRT | reach-through voltage for Cbc limiting | V | 0 |
| VTF | tf coefficient of Vbci dependence | V | 0 |
| WBE | partitioning of Ibe/Ibex and Qbe/Qbex | — | 1 |
| WSP | partitioning of Iccp between Vbep and Vbci | — | 1 |
| XII | temperature exponent of ibei, ibci, ibeip, ibcip | — | 3 |
| XIKF | temperature exponent of ikf | — | 0 |
| XIN | temperature exponent of iben, ibcn, ibenp, ibcnp | — | 3 |
| XIS | temperature exponent of is | — | 3 |
| XISR | temperature exponent for isrr | — | 0 |
| XRB | temperature exponent of rbx and rbi | — | 0 |
| XRBI | temperature exponent of rbi (overrides xrb) | — | 0 |
| XRBP | temperature exponent of rbp (overrides xrc) | — | 0 |
| XRBX | temperature exponent of rbx (overrides xrb) | — | 0 |
| XRC | temperature exponent of rci and rcx and rbp | — | 0 |
| XRCI | temperature exponent of rci (overrides xrc) | — | 0 |
| XRCX | temperature exponent of rcx (overrides xrc) | — | 0 |
| XRE | temperature exponent of re | — | 0 |
| XRS | temperature exponent of rs | — | 0 |
| XTF | tf bias dependence coefficient | — | 0 |

Table 2.55: VBIC 1.3 4T Device Model Parameters

| Parameter | Description | Units | Default |
|---|---|---|---|
| XVO | temperature exponent of vo | — | 0 |

## Level=23 instance parameters

Table 2.56 lists the parameters for the level 23 BJT (FBH HBT_X model) available on the instance line.

Table 2.56: FBH HBT_X v2.1 Device Instance Parameters

| Parameter | Description | Units | Default |
|---|---|---|---|
| L | Length of emitter fingers | m | 3e-05 |
| N | Number of emitter fingers | – | 1 |
| TEMP | Device operating temperature | °C | 25 |
| W | Width of emitter fingers | m | 3e-06 |

## Level=23 model parameters

Table 2.57: FBH HBT_X v2.1 Device Model Parameters

| Parameter | Description | Units | Default |
|---|---|---|---|
| AHC | | – | 0 |
| BF | | – | 100 |
| BR | | – | 1 |
| BVCEO | | – | 0 |
| BVEBO | | – | 0 |
| CJC | | – | 1e-15 |
| CJE | | – | 1e-15 |
| CMIN | | – | 1e-16 |
| CPB | | – | 0 |
| CPC | | – | 0 |
| CQ | | – | 0 |
| CTH | | – | 7e-07 |
| DEBUG | | – | 0 |
| DEBUGPLUS | | – | 0 |
| IKF | | – | 0 |
| IKR | | – | 0 |
| JO | | – | 0.001 |

Table 2.57: FBH HBT_X v2.1 Device Model Parameters

| Parameter | Description | Units | Default |
|---|---|---|---|
| JK | | – | 0.0004 |
| JSC | | – | 0 |
| JSE | | – | 0 |
| JSEE | | – | 0 |
| JSF | | – | 2e-23 |
| JSR | | – | 2e-17 |
| KBETA | | – | 0 |
| KC | | – | 0 |
| KJC | | – | 1 |
| L | Length of emitter fingers | m | 3e-05 |
| LB | | – | 0 |
| LC | | – | 0 |
| LE | | – | 0 |
| MC | | – | 0 |
| MJC | | – | 0.5 |
| MJE | | – | 0.5 |
| MODE | | – | 1 |
| N | Number of emitter fingers | – | 1 |
| NC | | – | 0 |
| NE | | – | 0 |
| NEE | | – | 0 |
| NF | | – | 1 |
| NOISE | | – | 1 |
| NR | | – | 1 |
| RB | | – | 1 |
| RB2 | | – | 1 |
| RBBXX | | – | 1e+06 |
| RBXX | | – | 1e+06 |
| RC | | – | 1 |
| RCIO | | – | 0.001 |
| RCXX | | – | 1e+06 |
| RE | | – | 1 |
| RJK | | – | 0.001 |
| RTH | | – | 0.1 |
| TEMP | Device operating temperature | °C | 25 |

Table 2.57: FBH HBT_X v2.1 Device Model Parameters

| Parameter | Description | Units | Default |
|---|---|---|---|
| TF | | – | 1e-12 |
| TFT | | – | 0 |
| THCS | | – | 0 |
| TNOM | | – | 20 |
| TR | | – | 1e-15 |
| TRX | | – | 1e-15 |
| VAF | | – | 0 |
| VAR | | – | 0 |
| VCES | | – | 0.001 |
| VG | | – | 1.3 |
| VGB | | – | 0 |
| VGBB | | – | 0 |
| VGC | | – | 0 |
| VGR | | – | 0 |
| VJC | | – | 1.3 |
| VJE | | – | 1.3 |
| W | Width of emitter fingers | m | 3e-06 |
| XCJC | | – | 0.5 |
| XJO | | – | 1 |

## Level=504 instance parameters

Table 2.58 lists the parameters for the level 504 BJT (MEXTRAM model) available on the instance line.

Table 2.58: MEXTRAM 504.12.1 Device Instance Parameters

| Parameter | Description | Units | Default |
|---|---|---|---|
| M | Alias for MULT | — | 1 |
| MULT | Multiplication factor | — | 1 |

## Level=504 model parameters

Table 2.59: MEXTRAM 504.12.1 Device Model Parameters

| Parameter | Description | Units | Default |
|---|---|---|---|
| AB | Temperature coefficient of the resistivity of the base | — | 1 |
| AC | Temperature coefficient of the resistivity of the collector contact | — | 2 |
| ACBL | Temperature coefficient of the resistivity of the collector buried layer | — | 2 |
| AE | Temperature coefficient of the resistivity of the emitter | — | 0 |
| AEPI | Temperature coefficient of the resistivity of the epilayer | — | 2.5 |
| AEX | Temperature coefficient of the resistivity of the extrinsic base | — | 0.62 |
| AF | Exponent of the Flicker-noise | — | 2 |
| AQBO | Temperature coefficient of the zero-bias base charge | — | 0.3 |
| AS | Substrate temperature coefficient | — | 1.58 |
| ASUB | Temperature coefficient for mobility of minorities in the substrate | — | 2 |
| AVGEB | Temperature coefficient band-gap voltage for Zener effect emitter-base junction | — | 0.000473 |
| AXI | Smoothness parameter for the onset of quasi-saturation | — | 0.3 |
| BF | Ideal forward current gain | — | 215 |
| BRI | Ideal reverse current gain | — | 7 |
| CBCO | Collector-base overlap capacitance | — | 0 |
| CBEO | Emitter-base overlap capacitance | — | 0 |
| CJC | Zero-bias collector-base depletion capacitance | — | 7.8e-14 |
| CJE | Zero-bias emitter-base depletion capacitance | — | 7.3e-14 |
| CJS | Zero-bias collector-substrate depletion capacitance | — | 3.15e-13 |
| DAIS | Fine tuning of temperature dependence of C-E saturation current | — | 0 |
| DEG | Bandgap difference over the base | — | 0 |
| DTA | Difference between the local and global ambient temperatures | — | 0 |
| DVGBF | Band-gap voltage difference of the forward current gain | — | 0.05 |
| DVGBR | Band-gap voltage difference of the reverse current gain | — | 0.045 |

Table 2.59: MEXTRAM 504.12.1 Device Model Parameters

| Parameter | Description | Units | Default |
|---|---|---|---|
| DVGTE | Band-gap voltage difference of emitter stored charge | — | 0.05 |
| EXAVL | Flag for extended modeling of avalanche currents | — | 0 |
| EXMOD | Flag for extended modeling of the reverse current gain | — | 1 |
| EXPHI | Flag for the distributed high-frequency effects in transient | — | 1 |
| EXSUB | Flag for extended modelling of substrate currents | — | 0 |
| FTAUN | Fraction of noise transit time to total transit time | — | 0 |
| GMIN | Minimum conductance | — | 1e-13 |
| IBF | Saturation current of the non-ideal forward base current | — | 2.7e-15 |
| IBR | Saturation current of the non-ideal reverse base current | — | 1e-15 |
| ICSS | Collector-substrate ideal saturation current | — | -1 |
| IHC | Critical current for velocity saturation in the epilayer | — | 0.004 |
| IK | Collector-emitter high injection knee current | — | 0.1 |
| IKS | Base-substrate high injection knee current | — | 0.00025 |
| IS | Collector-emitter saturation current | — | 2.2e-17 |
| ISS | Base-substrate saturation current | — | 4.8e-17 |
| IZEB | Pre-factor of emitter-base Zener tunneling current | — | 0 |
| KAVL | Switch for white noise contribution due to avalanche | — | 0 |
| KC | Switch for RF correlation noise model selection | — | 0 |
| KE | Fraction of QE in excess phase shift | — | 0 |
| KF | Flicker-noise coefficient of the ideal base current | — | 2e-11 |
| KFN | Flicker-noise coefficient of the non-ideal base current | — | 2e-11 |
| LEVEL | Model level | — | 504 |
| M | Alias for MULT | — | 1 |
| MC | Coefficient for current modulation of CB depletion capacitance | — | 0.5 |
| MLF | Non-ideality factor of the non-ideal forward base current | — | 2 |
| MTAU | Non-ideality factor of the emitter stored charge | — | 1 |
| MULT | Multiplication factor | — | 1 |

Table 2.59: MEXTRAM 504.12.1 Device Model Parameters

| Parameter | Description | Units | Default |
|---|---|---|---|
| NZEB | Coefficient of emitter-base Zener tunneling current | — | 22 |
| PC | Collector-base grading coefficient | — | 0.5 |
| PE | Emitter-base grading coefficient | — | 0.4 |
| PS | Collector-substrate grading coefficient | — | 0.34 |
| RBC | Constant part of the base resistance | — | 23 |
| RBV | Zero-bias value of the variable part of the base resistance | — | 18 |
| RCBLI | Resistance Collector Buried Layer Intrinsic | — | 0 |
| RCBLX | Resistance Collector Buried Layer eXtrinsic | — | 0 |
| RCC | Constant part of the collector resistance | — | 12 |
| RCV | Resistance of the un-modulated epilayer | — | 150 |
| RE | Emitter resistance | — | 5 |
| SCRCV | Space charge resistance of the epilayer | — | 1250 |
| SFH | Current spreading factor of avalanche model when EXAVL=1 | — | 0.3 |
| TAUB | Transit time of stored base charge | — | 4.2e-12 |
| TAUE | Minimum transit time of stored emitter charge | — | 2e-12 |
| TAUR | Transit time of reverse extrinsic stored base charge | — | 5.2e-10 |
| TEPI | Transit time of stored epilayer charge | — | 4.1e-11 |
| TREF | Reference temperature | — | 25 |
| TVGEB | Temperature coefficient band-gap voltage for Zener effect emitter-base junction | — | 636 |
| TYPE | Flag for NPN (1) or PNP (-1) transistor type | — | 1 |
| VAVL | Voltage determining curvature of avalanche current | — | 3 |
| VDC | Collector-base diffusion voltage | — | 0.68 |
| VDE | Emitter-base diffusion voltage | — | 0.95 |
| VDS | Collector-substrate diffusion voltage | — | 0.62 |
| VEF | Forward Early voltage | — | 44 |
| VER | Reverse Early voltage | — | 2.5 |
| VGB | Band-gap voltage of the base | — | 1.17 |
| VGC | Band-gap voltage of the collector | — | 1.18 |
| VGJ | Band-gap voltage recombination emitter-base junction | — | 1.15 |
| VGS | Band-gap voltage of the substrate | — | 1.2 |

Table 2.59: MEXTRAM 504.12.1 Device Model Parameters

| Parameter | Description | Units | Default |
|---|---|---|---|
| VGZEB | Band-gap voltage at Tref of Zener effect emitter-base junction | — | 1.15 |
| VLR | Cross-over voltage of the non-ideal reverse base current | — | 0.2 |
| WAVL | Epilayer thickness used in weak-avalanche model | — | 1.1e-06 |
| XCJC | Fraction of CB depletion capacitance under the emitter | — | 0.032 |
| XCJE | Sidewall fraction of the emitter-base depletion capacitance | — | 0.4 |
| XEXT | Part of currents and charges that belong to extrinsic region | — | 0.63 |
| XIBI | Part of ideal base current that belongs to the sidewall | — | 0 |
| XP | Constant part of Cjc | — | 0.35 |
| XQB | Emitter-fraction of base diffusion charge | — | 0.333333 |
| XREC | Pre-factor of the recombination part of Ib1 | — | 0 |

## Level=505 instance parameters

Table 2.60 lists the parameters for the level 505 BJT (MEXTRAM model with self-heating model) available on the instance line.

Table 2.60: MEXTRAM 504.12.1 with self heating Device Instance Parameters

| Parameter | Description | Units | Default |
|---|---|---|---|
| M | Alias for MULT | — | 1 |
| MULT | Multiplication factor | — | 1 |

## Level=505 model parameters

Table 2.61: MEXTRAM 504.12.1 with self heating Device Model Parameters

| Parameter | Description | Units | Default |
|---|---|---|---|
| AB | Temperature coefficient of the resistivity of the base | — | 1 |
| AC | Temperature coefficient of the resistivity of the collector contact | — | 2 |

Table 2.61: MEXTRAM 504.12.1 with self heating Device Model Parameters

| Parameter | Description | Units | Default |
|---|---|---|---|
| ACBL | Temperature coefficient of the resistivity of the collector buried layer | — | 2 |
| AE | Temperature coefficient of the resistivity of the emitter | — | 0 |
| AEPI | Temperature coefficient of the resistivity of the epilayer | — | 2.5 |
| AEX | Temperature coefficient of the resistivity of the extrinsic base | — | 0.62 |
| AF | Exponent of the Flicker-noise | — | 2 |
| AQBO | Temperature coefficient of the zero-bias base charge | — | 0.3 |
| AS | Substrate temperature coefficient | — | 1.58 |
| ASUB | Temperature coefficient for mobility of minorities in the substrate | — | 2 |
| ATH | Temperature coefficient of the thermal resistance | — | 0 |
| AVGEB | Temperature coefficient band-gap voltage for Zener effect emitter-base junction | — | 0.000473 |
| AXI | Smoothness parameter for the onset of quasi-saturation | — | 0.3 |
| BF | Ideal forward current gain | — | 215 |
| BRI | Ideal reverse current gain | — | 7 |
| CBCO | Collector-base overlap capacitance | — | 0 |
| CBEO | Emitter-base overlap capacitance | — | 0 |
| CJC | Zero-bias collector-base depletion capacitance | — | 7.8e-14 |
| CJE | Zero-bias emitter-base depletion capacitance | — | 7.3e-14 |
| CJS | Zero-bias collector-substrate depletion capacitance | — | 3.15e-13 |
| CTH | Thermal capacitance | — | 3e-09 |
| DAIS | Fine tuning of temperature dependence of C-E saturation current | — | 0 |
| DEG | Bandgap difference over the base | — | 0 |
| DTA | Difference between the local and global ambient temperatures | — | 0 |
| DVGBF | Band-gap voltage difference of the forward current gain | — | 0.05 |
| DVGBR | Band-gap voltage difference of the reverse current gain | — | 0.045 |
| DVGTE | Band-gap voltage difference of emitter stored charge | — | 0.05 |

Table 2.61: MEXTRAM 504.12.1 with self heating Device Model Parameters

| Parameter | Description | Units | Default |
|---|---|---|---|
| EXAVL | Flag for extended modeling of avalanche currents | — | 0 |
| EXMOD | Flag for extended modeling of the reverse current gain | — | 1 |
| EXPHI | Flag for the distributed high-frequency effects in transient | — | 1 |
| EXSUB | Flag for extended modelling of substrate currents | — | 0 |
| FTAUN | Fraction of noise transit time to total transit time | — | 0 |
| GMIN | Minimum conductance | — | 1e-13 |
| IBF | Saturation current of the non-ideal forward base current | — | 2.7e-15 |
| IBR | Saturation current of the non-ideal reverse base current | — | 1e-15 |
| ICSS | Collector-substrate ideal saturation current | — | -1 |
| IHC | Critical current for velocity saturation in the epilayer | — | 0.004 |
| IK | Collector-emitter high injection knee current | — | 0.1 |
| IKS | Base-substrate high injection knee current | — | 0.00025 |
| IS | Collector-emitter saturation current | — | 2.2e-17 |
| ISS | Base-substrate saturation current | — | 4.8e-17 |
| IZEB | Pre-factor of emitter-base Zener tunneling current | — | 0 |
| KAVL | Switch for white noise contribution due to avalanche | — | 0 |
| KC | Switch for RF correlation noise model selection | — | 0 |
| KE | Fraction of QE in excess phase shift | — | 0 |
| KF | Flicker-noise coefficient of the ideal base current | — | 2e-11 |
| KFN | Flicker-noise coefficient of the non-ideal base current | — | 2e-11 |
| LEVEL | Model level | — | 504 |
| M | Alias for MULT | — | 1 |
| MC | Coefficient for current modulation of CB depletion capacitance | — | 0.5 |
| MLF | Non-ideality factor of the non-ideal forward base current | — | 2 |
| MTAU | Non-ideality factor of the emitter stored charge | — | 1 |
| MULT | Multiplication factor | — | 1 |

Table 2.61: MEXTRAM 504.12.1 with self heating Device Model Parameters

| Parameter | Description | Units | Default |
|---|---|---|---|
| NZEB | Coefficient of emitter-base Zener tunneling current | — | 22 |
| PC | Collector-base grading coefficient | — | 0.5 |
| PE | Emitter-base grading coefficient | — | 0.4 |
| PS | Collector-substrate grading coefficient | — | 0.34 |
| RBC | Constant part of the base resistance | — | 23 |
| RBV | Zero-bias value of the variable part of the base resistance | — | 18 |
| RCBLI | Resistance Collector Buried Layer Intrinsic | — | 0 |
| RCBLX | Resistance Collector Buried Layer eXtrinsic | — | 0 |
| RCC | Constant part of the collector resistance | — | 12 |
| RCV | Resistance of the un-modulated epilayer | — | 150 |
| RE | Emitter resistance | — | 5 |
| RTH | Thermal resistance | — | 300 |
| SCRCV | Space charge resistance of the epilayer | — | 1250 |
| SFH | Current spreading factor of avalanche model when EXAVL=1 | — | 0.3 |
| TAUB | Transit time of stored base charge | — | 4.2e-12 |
| TAUE | Minimum transit time of stored emitter charge | — | 2e-12 |
| TAUR | Transit time of reverse extrinsic stored base charge | — | 5.2e-10 |
| TEPI | Transit time of stored epilayer charge | — | 4.1e-11 |
| TREF | Reference temperature | — | 25 |
| TVGEB | Temperature coefficient band-gap voltage for Zener effect emitter-base junction | — | 636 |
| TYPE | Flag for NPN (1) or PNP (-1) transistor type | — | 1 |
| VAVL | Voltage determining curvature of avalanche current | — | 3 |
| VDC | Collector-base diffusion voltage | — | 0.68 |
| VDE | Emitter-base diffusion voltage | — | 0.95 |
| VDS | Collector-substrate diffusion voltage | — | 0.62 |
| VEF | Forward Early voltage | — | 44 |
| VER | Reverse Early voltage | — | 2.5 |
| VGB | Band-gap voltage of the base | — | 1.17 |
| VGC | Band-gap voltage of the collector | — | 1.18 |

Table 2.61: MEXTRAM 504.12.1 with self heating Device Model Parameters

| Parameter | Description | Units | Default |
|---|---|---|---|
| VGJ | Band-gap voltage recombination emitter-base junction | — | 1.15 |
| VGS | Band-gap voltage of the substrate | — | 1.2 |
| VGZEB | Band-gap voltage at Tref of Zener effect emitter-base junction | — | 1.15 |
| VLR | Cross-over voltage of the non-ideal reverse base current | — | 0.2 |
| WAVL | Epilayer thickness used in weak-avalanche model | — | 1.1e-06 |
| XCJC | Fraction of CB depletion capacitance under the emitter | — | 0.032 |
| XCJE | Sidewall fraction of the emitter-base depletion capacitance | — | 0.4 |
| XEXT | Part of currents and charges that belong to extrinsic region | — | 0.63 |
| XIBI | Part of ideal base current that belongs to the sidewall | — | 0 |
| XP | Constant part of Cjc | — | 0.35 |
| XQB | Emitter-fraction of base diffusion charge | — | 0.333333 |
| XREC | Pre-factor of the recombination part of Ib1 | — | 0 |

## BJT Equations

The BJT implementation within **Xyce** is based on [11]. The equations in this section describe an NPN transistor. For the PNP device, reverse the signs of all voltages and currents. The equations use the following variables:

$$
\begin{aligned}
V_{be} &= \text{intrinsic base-intrinsic emitter voltage} \\
V_{bc} &= \text{intrinsic base-intrinsic collector voltage} \\
V_{bs} &= \text{intrinsic base-substrate voltage} \\
V_{bw} &= \text{intrinsic base-extrinsic collector voltage (quasi-saturation only)} \\
V_{bx} &= \text{extrinsic base-intrinsic collector voltage} \\
V_{ce} &= \text{intrinsic collector-intrinsic emitter voltage} \\
V_{js} &= \text{(NPN) intrinsic collector-substrate voltage} \\
&= \text{(PNP) intrinsic substrate-collector voltage} \\
V_t &= kT/q \text{ (thermal voltage)} \\
V_{th} &= \text{threshold voltage} \\
k &= \text{Boltzmann's constant} \\
q &= \text{electron charge}
\end{aligned}
$$

$$
\begin{aligned}
T &= \text{analysis temperature (K)} \\
T_0 &= \text{nominal temperature (set using } \mathbf{TNOM} \text{ option)}
\end{aligned}
$$

Other variables are listed above in BJT Model Parameters.

DC Current

The BJT model is based on the Gummel and Poon model [12] where the different terminal currents are written

$$
\begin{aligned}
I_e &= -I_{cc} - I_{be} + I_{re} + (C_{dife} + C_{de})\frac{dV_{be}}{dt} \\
I_c &= -I_{cc} + I_{bc} - I_{rc} - (C_{difc} + C_{dc})\frac{dV_{bc}}{dt} \\
I_b &= I_e - I_c
\end{aligned}
$$

Here, $C_{dife}$ and $C_{difc}$ are the capacitances related to the hole charges per unit area in the base, $Q_{dife}$ and $Q_{difc}$, affiliated with the electrons introduced across the emitter-base and collector-base junctions, respectively. Also, $C_{be}$ and $C_{bc}$ are the capacitances related to donations to the hole charge of the base, $Q_{be}$ and $Q_{bc}$, affiliated with the differences in the depletion regions of the emitter-base and collector-base junctions, respectively. The intermediate currents used are defined as

$$
\begin{aligned}
-I_{be} &= \frac{\mathbf{IS}}{\mathbf{BF}}\left[\exp\left(\frac{V_{be}}{\mathbf{NF}V_{th}}\right) - 1\right] \\
-I_{cc} &= \frac{Q_{bo}}{Q_b}\mathbf{IS}\left[\exp\left(\frac{V_{be}}{\mathbf{NF}V_{th}}\right) - \exp\left(\frac{V_{bc}}{\mathbf{NF}V_{th}}\right)\right] \\
-I_{bc} &= \frac{\mathbf{IS}}{\mathbf{BR}}\left[\exp\left(\frac{V_{bc}}{\mathbf{NR}V_{th}}\right) - 1\right] \\
I_{re} &= \mathbf{ISE}\left[\exp\left(\frac{V_{be}}{\mathbf{NE}V_{th}}\right) - 1\right] \\
I_{rc} &= \mathbf{ISC}\left[\exp\left(\frac{V_{bc}}{\mathbf{NC}V_{th}}\right) - 1\right]
\end{aligned}
$$

where the last two terms are the generation/recombination currents related to the emitter and collector junctions, respectively. The charge $Q_b$ is the majority carrier charge in the base at large injection levels and is a key difference in the Gummel-Poon model over the earlier Ebers-Moll model. The ratio $Q_b/Q_{bo}$ (where $Q_{bo}$ represents the zero-bias base charge, i.e. the value of $Q_b$ when $V_{be} = V_{bc} = 0$) as computed by **Xyce** is given by

$$
\frac{Q_b}{Q_{bo}} = \frac{q_1}{2}\left(1 + \sqrt{1 + 4q_2}\right)
$$

where

$$
q_1 = \left(1 - \frac{V_{be}}{\mathbf{VAR}} - \frac{V_{bc}}{\mathbf{VAF}}\right)^{-1}
$$

$$q_2 = \frac{\mathbf{IS}}{\mathbf{IKF}}\left[\exp\left(\frac{V_{be}}{\mathbf{NF}V_{th}}\right)-1\right]+\frac{\mathbf{IS}}{\mathbf{IKR}}\left[\exp\left(\frac{V_{bc}}{\mathbf{NR}V_{th}}\right)-1\right]$$

Capacitance Terms

The capacitances listed in the above DC $I-V$ equations each consist of a depletion layer capacitance $C_d$ and a diffusion capacitance $C_{dif}$. The first is given by

$$C_d = \begin{cases} \mathbf{CJ}\left(1-\frac{V_{di}}{\mathbf{VJ}}\right)^{-\mathbf{M}} & V_{di} \leq \mathbf{FC}\cdot\mathbf{VJ} \\ \mathbf{CJ}\left(1-\mathbf{FC}\right)^{-(1+\mathbf{M})}\left[1-\mathbf{FC}(1+\mathbf{M})+\mathbf{M}\frac{V_{di}}{\mathbf{VJ}}\right] & V_{di} > \mathbf{FC}\cdot\mathbf{VJ} \end{cases}$$

where $\mathbf{CJ} = \mathbf{CJE}$ for $C_{de}$, and where $\mathbf{CJ} = \mathbf{CJC}$ for $C_{dc}$. The diffusion capacitance (sometimes referred to as the transit time capacitance) is

$$C_{dif} = \mathbf{TT}G_d = \mathbf{TT}\frac{dI}{dV_{di}}$$

where $I$ is the diode DC current given, $G_d$ is the corresponding junction conductance, and where $\mathbf{TT} = \mathbf{TF}$ for $C_{dife}$ and $\mathbf{TT} = \mathbf{TR}$ for $C_{difc}$.

Temperature Effects

SPICE temperature effects are default, but all levels of the BJT have a more advanced temperature compensation available. By specifying `TEMPMODEL=QUADRATIC` in the netlist, parameters can be interpolated quadratically between measured values extracted from data. In the BJT, IS and ISE are interpolated logarithmically because they can change over an order of magnitude or more for temperature ranges of interest. See the Section 2.1.14 for more details on how to include quadratic temperature effects.

For further information on BJT models, see [12]. For a thorough description of the U.C. Berkeley SPICE models see Reference [13].

## 2.3.17 Junction Field-Effect Transistor (JFET)

**Symbol**

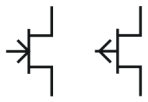

**Instance Form**

```
J<name> <drain node> <gate node> <source node> <model name> + [area
value] [device parameters]
```

**Examples**

```
JIN 100 1 0 JFAST
J13 22 14 23 JNOM 2.0
J1 1 2 0 2N5114
```

**Model Form**

```
.MODEL <model name> NJF [model parameters]
.MODEL <model name> PJF [model parameters]
```

**Parameters and Options**

`drain node`
: Node connected to drain.

`gate node`
: Node connected to gate.

`source node`
: Node connected to source.

`source node`
: Name of model defined in .MODEL line.

`area value`
: The `JFET` is modeled as an intrinsic FET using an ohmic resistance (`RD/area`) in series with the drain and another ohmic resistance (`RS/area`) in series with the source. `area` is an area factor with a default of `1`.

`device parameters`
: Parameters listed in Table 2.62 may be provided as space separated `<parameter>=<value>` specifications as needed. Any number of parameters may be specified.

**Comments**

The `JFET` was first proposed and analyzed by Shockley. The SPICE- compatible `JFET` model is an approximation to the Shockley analysis that employs an adjustable parameter B. Both the Shockley formulation and the SPICE approximation are available in Xyce.

## Device Parameters

Table 2.62: JFET Device Instance Parameters

| Parameter | Description | Units | Default |
|---|---|---|---|
| AREA | Device area | $m^2$ | 1 |
| TEMP | Device temperature | – | Ambient Tempera-ture |

## Model Parameters

Table 2.63: JFET Device Model Parameters

| Parameter | Description | Units | Default |
|---|---|---|---|
| AF | Flicker noise exponent | – | 1 |
| B | Doping tail parameter (level 1) | $V^{-1}$ | 1 |
| BETA | Transconductance parameter | $A/V^2$ | 0.0001 |
| CGD | Zero-bias gate-drain junction capacitance | F | 0 |
| CGS | Zero-bias gate-source junction capacitance | F | 0 |
| DELTA | Saturation voltage parrameter (level 2) | V | 0 |
| FC | Coefficient for forward-bias depletion capacitance | F | 0.5 |
| IS | Gate junction saturation current | A | 1e-14 |
| KF | Flicker noise coefficient | – | 0.05 |
| LAMBDA | Channel length modulation | $V^{-1}$ | 0 |
| PB | Gate junction potential | V | 1 |
| RD | Drain ohmic resistance | Ω | 0 |
| RS | Source ohmic resistance | Ω | 0 |
| TEMPMODEL | Specifies the type of parameter interpolation over temperature | – | 'NONE' |
| THETA | Mobility modulation parameter (level 2) | $V^{-1}$ | 0 |
| TNOM | Nominal device temperature | °C | Ambient Tempera-ture |
| VTO | Threshold voltage | V | -2 |

## Device Parameters

Table 2.64: JFET Device Instance Parameters

| Parameter | Description | Units | Default |
|---|---|---|---|
| AREA | Device area | $m^2$ | 1 |
| TEMP | Device temperature | – | Ambient Temperature |

## Model Parameters

Table 2.65: JFET Device Model Parameters

| Parameter | Description | Units | Default |
|---|---|---|---|
| AF | Flicker noise exponent | – | 1 |
| B | Doping tail parameter (level 1) | $V^{-1}$ | 1 |
| BETA | Transconductance parameter | $A/V^2$ | 0.0001 |
| CGD | Zero-bias gate-drain junction capacitance | F | 0 |
| CGS | Zero-bias gate-source junction capacitance | F | 0 |
| DELTA | Saturation voltage parrameter (level 2) | V | 0 |
| FC | Coefficient for forward-bias depletion capacitance | F | 0.5 |
| IS | Gate junction saturation current | A | 1e-14 |
| KF | Flicker noise coefficient | – | 0.05 |
| LAMBDA | Channel length modulation | $V^{-1}$ | 0 |
| PB | Gate junction potential | V | 1 |
| RD | Drain ohmic resistance | Ω | 0 |
| RS | Source ohmic resistance | Ω | 0 |
| TEMPMODEL | Specifies the type of parameter interpolation over temperature | – | 'NONE' |
| THETA | Mobility modulation parameter (level 2) | $V^{-1}$ | 0 |
| TNOM | Nominal device temperature | °C | Ambient Temperature |
| VTO | Threshold voltage | V | -2 |

## JFET Level selection

**Xyce** supports two JFET models. LEVEL=1, the default, is the SPICE 3f5 treatment. This model employs a doping profile parameter B. When B=1, the original SPICE square law is exactly implemented, and when B=0.6 the model is close to that of Shockley.

When LEVEL=2 is selected, the Shockley model is used with some additional physics effects: channel length modulation and the effect of gate electric field on mobility. An additional parameter, DELTA, is added to the LEVEL 2 model that allows the user to adjust the saturation voltage.

## JFET Power Calculations

Power dissipated in the transistor is calculated with $I_D * V_{DS} + I_G * V_{GS}$ where $I_D$ is the drain current, $I_G$ is the gate current, $V_{DS}$ is the voltage drop between the drain and the source and $V_{GS}$ is the voltage drop between the gate and the source. This formula may differ from other simulators, such as HSpice and PSpice.

## 2.3.18 Metal-Semiconductor FET (MESFET)

**Symbol**

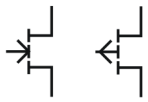

**Instance Form**

```
Z<name> < drain node> <gate node> <source node> <model name>
+ [area value] [device parameters]
```

**Model Form**

```
.MODEL <model name> NMF [model parameters]
.MODEL <model name> PMF [model parameters]
```

**Examples**

```
Z1 2 3 0 MESMOD AREA=1.4
Z1 7 2 3 ZM1
```

**Parameters and Options**

`drain node`
: Node connected to drain.

`gate node`
: Node connected to gate.

`source node`
: Node connected to source.

`source node`
: Name of model defined in .MODEL line.

`area value`
: The `MESFET` is modeled as an intrinsic FET using an ohmic resistance (`RD/area`) in series with the drain and another ohmic resistance (`RS/area`) in series with the source. `area value` is a scaling factor with a default of 1.

`device parameters`
: Parameters listed in Table 2.66 may be provided as space separated `<parameter>=<value>` specifications as needed. Any number of parameters may be specified.

**Comments**

Although MESFETs can be made of Si, such devices are not as common as GaAs MESFETS. And since the mobility of electrons is much higher than holes in GaAs, nearly all commercial devices are n-type MESFETS.

## Device Parameters

Table 2.66: MESFET Device Instance Parameters

| Parameter | Description | Units | Default |
|---|---|---|---|
| AREA | device area | $m^2$ | 1 |
| TEMP | Device temperature | – | Ambient Temperature |

## Model Parameters

Table 2.67: MESFET Device Model Parameters

| Parameter | Description | Units | Default |
|---|---|---|---|
| AF | Flicker noise exponent | – | 1 |
| ALPHA | Saturation voltage parameter | $V^{-1}$ | 2 |
| B | Doping tail parameter | $V^{-1}$ | 0.3 |
| BETA | Transconductance parameter | $A/V^2$ | 0.0025 |
| CGD | Zero-bias gate-drain junction capacitance | F | 0 |
| CGS | Zero-bias gate-source junction capacitance | F | 0 |
| FC | Coefficient for forward-bias depletion capacitance | F | 0.5 |
| IS | Gate junction saturation current | A | 1e-14 |
| KF | Flicker noise coefficient | – | 0.05 |
| LAMBDA | Channel length modulation | $V^{-1}$ | 0 |
| PB | Gate junction potential | V | 1 |
| RD | Drain ohmic resistance | Ω | 0 |
| RS | Source ohmic resistance | Ω | 0 |
| TEMPMODEL | Specifies the type of parameter interpolation over temperature | – | 'NONE' |
| TNOM | Nominal device temperature | °C | Ambient Temperature |
| VTO | Threshold voltage | V | 0 |

## MESFET Power Calculations

Power dissipated in the transistor is calculated with $I_D * V_{DS} + I_G * V_{GS}$ where $I_D$ is the drain current, $I_G$ is the gate current, $V_{DS}$ is the voltage drop between the drain and the source and $V_{GS}$ is the voltage drop between the gate and the source. This formula may differ from other simulators, such as HSpice and PSpice.

## 2.3.19 MOS Field Effect Transistor (MOSFET)

**Symbol**

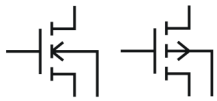

**Instance Form**

```
M<name> <drain node> <gate node> <source node>
+ <bulk/substrate node> <model name>
+ [L=<value>] [W=<value>]
+ [AD=<value>] [AS=<value>]
+ [PD=<value>] [PS=<value>]
+ [NRD=<value>] [NRS=<value>]
+ [M=<value] [IC=<value, ...>]
```

**Special Form (BSIMSOI)**

```
M<name> <drain node> <gate node> <source node>
+ <substrate node (E)>
+ [<External body contact (P)>]
+ [<internal body contact (B)>]
+ [<temperature node (T)>]
+ <model name>
+ [L=<value>] [W=<value>]
+ [AD=<value>] [AS=<value>]
+ [PD=<value>] [PS=<value>]
+ [NRD=<value>] [NRS=<value>] [NRB=<value>]
+ [BJTOFF=<value>]
+ [IC=<val>,<val>,<val>,<val>,<val>]
+ [RTH0=<val>] [CTH0=<val>]
+ [NBC=<val>] [NSEG=<val>] [PDBCP=<val>] [PSBCP=<val>]
+ [AGBCP=<val>] [AEBCP=<val>] [VBSUSR=<val>] [TNODEOUT]
+ [FRBODY=<val>] [M=<value>]
```

**Special Form (MVS)**

```
M<name> <drain node> <gate node> <source node> <model name>
```

**Model Form**

```
.MODEL <model name> NMOS [model parameters]
.MODEL <model name> PMOS [model parameters]
```

**Examples**

```
M5 4 12 3 0 PNOM L=20u W=10u
M3 5 13 10 0 PSTRONG
M6 7 13 10 0 PSTRONG M=2
M8 10 12 100 100 NWEAK L=30u W=20u
+ AD=288p AS=288p PD=60u PS=60u NRD=14 NRS=24
```

**Parameters and Options**

`L`

`M` The MOSFET channel length and width that are decreased to get the actual channel length and width. They may be given in the device `.MODEL` or `.OPTIONS` statements. The value in the device statement overrides the value in the model statement, which overrides the value in the `.OPTIONS` statement. If `L` or `W` values are not given, their default value is 100 $\mu$m.

`AD`

`AS` The drain and source diffusion areas. Defaults for `AD` and `AS` can be set in the `.OPTIONS` statement. If `AD` or `AS` defaults are not set, their default value is 0.

`PD`

`PS` The drain and source diffusion perimeters. Their default value is 0.

`NRD`

`NRS` Multipliers (in units of $\square$) that can be multiplied by `RSH` to yield the parasitic (ohmic) resistances of the drain (`RD`) and source (`RS`), respectively. `NRD`, `NRS` default to 0.

Consider a square sheet of resistive material. Analysis shows that the resistance between two parallel edges of such a sheet depends upon its composition and thickness, but is independent of its size as long as it is square. In other words, the resistance will be the same whether the square's edge is 2 mm, 2 cm, or 2 m. For this reason, the *sheet resistance* of such a layer, abbreviated `RSH`, has units of Ohms per square, written $\Omega/\square$.

`M` If specified, the value is used as a number of parallel MOSFETs to be simulated. For example, if `M=2` is specified, **Xyce** simulates two identical mosfets connected to the same nodes in parallel.

`IC` The BSIM3 (model level 9), BSIM4 (model level 14) and BSIMSOI (model level 10) allow one to specify the initial voltage difference across nodes of the device during the DC operating point calculation. For the BSIM3 and BSIM4 the syntax is `IC=`$V_{ds}, V_{gs}, V_{bs}$ where $V_{ds}$ is the voltage difference between the drain and source, $V_{gs}$ is the voltage difference between the gate and source and $V_{bs}$ is the voltage difference between the body and source. The BSIMSOI device's initial condition syntax is `IC=`$V_{ds}, V_{gs}, V_{bs}, V_{es}, V_{ps}$ where the two extra terms are the voltage difference between the substrate and source, and the external body and source nodes respectively. Note that for any of these lists of voltage differences, fewer than the full number of options may be specified. For example, `IC=5.0` specifies an initial condition on $V_{ds}$ but does not specifiy any initial conditions on the other nodes. Therefore, one cannot specify $V_{gs}$ without specifying $V_{ds}$, etc.

It is illegal to specify initial conditions on any nodes that are tied together. **Xyce** attempts to catch such errors, but complex circuits may stymie this error trap.

**BSIMSOI Options**

There are a large number of extra instance parameters and optional nodes available for the BSIMSOI (level 10) MOSFET.

`substrate node`
: The fourth node of the BSIMSOI device is always the substrate node, which is referred to as the `E` node.

`external body contact node`
: If given, the fifth node is the external body contact node, `P`. It is connected to the internal body node through a body tie resistor. If `P` is not given, the internal body node is not accessible from the netlist and floats.

  If there are only five nodes specified and `TNODEOUT` is also specified, the fifth node is the temperature node instead.

`internal body contact node`
: If given, the sixth node is the internal body contact node, `B`. It is connected to the external body node through a body tie resistor. If `B` is not given and `P` is given, the internal body node is not accessible from the netlist, but is still tied to the external body contact through the tie resistance.

  If there are only six nodes specified and `TNODEOUT` is also specified, the sixth node is the temperature node instead.

`temperature node`
: If the parameter `TNODEOUT` is specified, the final node (fifth, sixth, or seventh) is interpreted as a temperature node. The temperature node is intended for thermal coupling simulation.

`BJTOFF`
: Turns off the parasitic BJT currents.

`IC` The `IC` parameter allows specification of the five junction initial conditions, $V_{ds}, V_{gs}, V_{bs}, V_{es}$ and $V_{ps}$. $V_{ps}$ is ignored in a four-terminal device.

`RTH0`
: Thermal resistance per unit width. Taken from model card if not given.

`CTH0`
: Thermal capacitance per unit width. Taken from model card if not given.

`NBC` Number of body contact isolation edges.

`NSEG`
: Number of segments for channel width partitioning.

`PDBCP`
: Parasitic perimeter length for body contact at drain side.

`PSBCP`
: Parasitic perimeter length for body contact at source side.

AGBCP
: Parasitic gate-to-body overlap area for body contact.

AEBCP
: Parasitic body-to-substrate overlap area for body contact.

VBSUSR
: Optional initial value of VBS specified by user for use in transient analysis. (unused in **Xyce**).

FRBODY
: Layout-dependent body resistance coefficient.

---

**Comments** The simulator provides three MOSFET device models, which differ in the formulation of the I-V characteristic. The `LEVEL` parameter selects among different models as shown below.

## MOSFET Operating Temperature

Model parameters may be assigned unique measurement temperatures using the $\mathbf{TNOM}$ model parameter. See the MOSFET model parameters for more information.

## MOSFET Power Calculations

Power dissipated in the transistor is calculated with $I_D * V_{DS} + I_G * V_{GS}$ where $I_D$ is the drain current, $I_G$ is the gate current, $V_{DS}$ is the voltage drop between the drain and the source and $V_{GS}$ is the voltage drop between the gate and the source. This formula may differ from other simulators, such as HSpice and PSpice.

## Internal Device Variables Accessible with `N()` Syntax

For the BSIM3 and BSIM4 models, several internal variables have been made accessible with the `N()` syntax on a `.PRINT` line. They are $g_m$ (tranconductance), $V_{th}$, $V_{ds}$, $V_{gs}$, $V_{bs}$, and $V_{dsat}$. An example `.PRINT` line command for a MOSFET device named `m1` would be:

```
.print dc N(m1:gm) N(m1:Vth) N(m1:Vdsat) N(m1:Vds) N(m1:Vgs) N(m1:Vbs)
```

If the user runs `Xyce -namesfile <filename> <netlist>` then **Xyce** will output into the first filename a list of all solution variables generated by that netlist. This can be useful for determining the "fully-qualified" device name, needed for the `N()` syntax, if the device is in a subcircuit.

## Instance Parameters

Tables 2.68, 2.70, 2.72, 2.74, 2.76 and 2.78 give the available instance parameters for the levels 1,2,3,6,9 and 10 MOSFETs, respectively.

In addition to the parameters shown in the tables, where a list of numbered initial condition parameters are shown, the MOSFETs support a vector parameter for the initial conditions. `IC1` and `IC2` may therefore be specified compactly as `IC=<ic1>,<ic2>`.

## Model Parameters

Tables 2.69, 2.71, 2.73, 2.75, 2.77, and 2.79 give the available model parameters for the levels 1,2,3,6,9 and 10 MOSFETs, respectively.

For a thorough description of MOSFET models see [13, 14, 15, 16, 17, 18, 19, 20, 21, 22].

All MOSFET models

The parameters shared by all MOSFET model levels are principally parasitic element values (e.g., series resistance, overlap capacitance, etc.).

Model levels 1 and 3

The DC behaviors of the level 1 and 3 MOSFET models are defined by the parameters $\mathbf{VTO}$, $\mathbf{KP}$, $\mathbf{LAMBDA}$, $\mathbf{PHI}$, and $\mathbf{GAMMA}$. The simulator calculates these if the process parameters (e.g., $\mathbf{TOX}$, and $\mathbf{NSUB}$) are specified, but these are always overridden by any user-defined values. The $\mathbf{VTO}$ value is positive (negative) for modeling the enhancement mode and negative (positive) for the depletion mode of N-channel (P-channel) devices.

For MOSFETs, the capacitance model enforces charge conservation, influencing just the Level 1 and 3 models.

Effective device parameter lengths and widths are calculated as follows:

$$P_i = P_0 + P_L/L_e + P_W/W_e$$

where

$$\begin{array}{rcl} L_e & = & \text{effective length} \quad = \quad \mathbf{L} - (2 \cdot \mathbf{LD}) \\ W_e & = & \text{effective width} \quad = \quad \mathbf{W} - (2 \cdot \mathbf{WD}) \end{array}$$

See $\mathbf{.MODEL}$ (model definition) for more information.

Model level 9 (BSIM3 version 3.2.2)

The University of California, Berkeley BSIM3 model is a physical-based model with a large number of dependencies on essential dimensional and processing parameters. It incorporates the key effects that are critical in modeling deep-submicrometer MOSFETs. These include threshold voltage reduction, nonuniform doping, mobility reduction due to the vertical field, bulk charge effect, carrier velocity saturation, drain-induced barrier lowering (DIBL), channel length modulation (CLM), hot-carrier-induced output resistance reduction, subthreshold conduction, source/drain parasitic resistance, substrate current induced body effect (SCBE) and drain voltage reduction in LDD structure.

The BSIM3 Version 3.2.2 model is a deep submicron MOSFET model with several major enhancements over earlier versions. These include a single I-V formula used to define the current and output conductance for operating regions, improved narrow width device modeling, a superior capacitance model with improved short and narrow geometry models, a new relaxation-time model

to better transient modeling and enhanced model fitting of assorted W/L ratios using a single parameter set. This version preserves the large number of integrated dependencies on dimensional and processing parameters of the Version 2 model. For further information, see Reference [14].

Additional notes

1. If any of the following BSIM3 3.2.2 model parameters are not specified, they are computed via the following:

   If $\mathbf{VTHO}$ is not specified, then:

   $$\mathbf{VTHO} = \mathbf{VFB} + \phi_s \mathbf{K1}\sqrt{\phi_s}$$

   where:

   $$\mathbf{VFB} = -1.0$$

   If $\mathbf{VTHO}$ is given, then:

   $$\begin{aligned} \mathbf{VFB} &= \mathbf{VTHO} - \phi_s + \mathbf{K1}\sqrt{phi_s} \\ \mathbf{VBX} &= \phi_s - \frac{q \cdot \mathbf{NCH} \cdot \mathbf{XT}^2}{2\varepsilon_{si}} \\ \mathbf{CF} &= \left(\frac{2\varepsilon_{ox}}{\pi}\right) \ln\left(1 + \frac{1}{4 \times 10^7 \cdot \mathbf{TOX}}\right) \end{aligned}$$

   where:

   $E_g(T) =$ the energy bandgap at temperature $T = 1.16 - \dfrac{T^2}{7.02 \times 10^4 (T + 1108)}$

2. If $\mathbf{K1}$ and $\mathbf{K2}$ are not given then they are computed via the following:

   $$\begin{aligned} \mathbf{K1} &= \mathbf{GAMMA2} - 2 \cdot \mathbf{K2}\sqrt{\phi_s - \mathbf{VBM}} \\ \mathbf{K2} &= \frac{(\mathbf{GAMMA1} - \mathbf{GAMMA2})(\sqrt{\phi_s - \mathbf{VBX}} - \sqrt{\phi_s})}{2\sqrt{\phi_s}(\sqrt{\phi_s - \mathbf{VBM}} - \sqrt{\phi_s}) + \mathbf{VBM}} \end{aligned}$$

   where:

   $$\begin{aligned} \phi_s &= 2V_t \ln\left(\frac{\mathbf{NCH}}{n_i}\right) \\ V_t &= kT/q \\ n_i &= 1.45 \times 10^{10} \left(\frac{T}{300.15}\right)^{1.5} \exp\left(21.5565981 - \frac{E_g(T)}{2V_t}\right) \end{aligned}$$

3. If $\mathbf{NCH}$ is not specified and $\mathbf{GAMMA1}$ is, then:

   $$\mathbf{NCH} = \frac{\mathbf{GAMMA1^2} \times \mathbf{COX^2}}{2q\varepsilon_{si}}$$

If $\mathbf{GAMMA1}$ and $\mathbf{NCH}$ *are not* specified, then $\mathbf{NCH}$ defaults to $1.7 \times 10^{23}\ m^{-3}$ and $\mathbf{GAMMA1}$ is computed using $\mathbf{NCH}$:

$$\mathbf{GAMMA1} = \frac{\sqrt{2q\varepsilon_{si} \cdot \mathbf{NCH}}}{\mathbf{COX}}$$

If $\mathbf{GAMMA2}$ is not specified, then:

$$\mathbf{GAMMA2} = \frac{\sqrt{2q\varepsilon_{si} \cdot \mathbf{NSUB}}}{\mathbf{COX}}$$

4. If $\mathbf{CGSO}$ is not specified and $\mathbf{DLC} > 0$, then:

$$\mathbf{CGSO} = \begin{cases} 0, & ((\mathbf{DLC} \cdot \mathbf{COX}) - \mathbf{CGSL}) < 0 \\ 0.6 \cdot \mathbf{XJ} \cdot \mathbf{COX}, & ((\mathbf{DLC} \cdot \mathbf{COX}) - \mathbf{CGSL}) \geq 0 \end{cases}$$

5. If $\mathbf{CGDO}$ is not specified and $\mathbf{DLC} > 0$, then:

$$\mathbf{CGDO} = \begin{cases} 0, & ((\mathbf{DLC} \cdot \mathbf{COX}) - \mathbf{CGSL}) < 0 \\ 0.6 \cdot \mathbf{XJ} \cdot \mathbf{COX}, & ((\mathbf{DLC} \cdot \mathbf{COX}) - \mathbf{CGSL}) \geq 0 \end{cases}$$

Model level 10 (BSIMSOI version 3.2)

The BSIMSOI is an international standard model for SOI (silicon on insulator) circuit design and is formulated on top of the BSIM3v3 framework. A detailed description can be found in the BSIMSOI 3.1 User's Manual [23] and the BSIMSOI 3.2 release notes [24].

This version (v3.2) of the BSIMSOI includes three depletion models; the partially depleted BSIMSOI PD (soiMod=0), the fully depleted BSIMSOI FD (soiMod=2), and the unified SOI model (soiMod=1).

BSIMPD is the Partial-Depletion (PD) mode of the BSIMSOI. A typical PD SOI MOSFET is formed on a thin SOI film which is layered on top of a buried oxide. BSIMPD has the following features and enhancements:

- Real floating body simulation of both I-V and C-V. The body potential is determined by the balance of all body current components.
- An improved parasitic bipolar current model. This includes enhancements in the various diode leakage components, second order effects (high-level injection and Early effect), diffusion charge equation, and temperature dependence of the diode junction capacitance.
- An improved impact-ionization current model. The contribution from BJT current is also modeled by the parameter Fbjtii.
- A gate-to-body tunneling current model, which is important to thin-oxide SOI technologies.
- Enhancements in the threshold voltage and bulk charge formulation of the high positive body bias regime.

- Instance parameters (Pdbcp, Psbcp, Agbcp, Aebcp, Nbc) are provided to model the parasitics of devices with various body-contact and isolation structures.
- An external body node (the 6th node) and other improvements are introduced to facilitate the modeling of distributed body resistance.
- Self heating. An external temperature node (the 7th node) is supported to facilitate the simulation of thermal coupling among neighboring devices.
- A unique SOI low frequency noise model, including a new excess noise resulting from the floating body effect.
- Width dependence of the body effect is modeled by parameters (K1,K1w1,K1w2).
- Improved history dependence of the body charges with two new parameters (Fbody, DLCB).
- An instance parameter Vbsusr is provided for users to set the transient initial condition of the body potential.
- The new charge-thickness capacitance model introduced in BSIM3v3.2, `capMod=3`, is included.

## Quadratic Temperature Compensation

SPICE temperature effects are the default, but MOSFET levels 18, 19 and 20 have a more advanced temperature compensation available. By specifying `TEMPMODEL=QUADRATIC` in the netlist, parameters can be interpolated quadratically between measured values extracted from data. See Section 2.1.14 for more details.

## MOSFET Equations

The following equations define an N-channel MOSFET. The P-channel devices use a reverse the sign for all voltages and currents. The equations use the following variables:

$$
\begin{aligned}
V_{bs} &= \text{intrinsic substrate-intrinsic source voltage} \\
V_{bd} &= \text{intrinsic substrate-intrinsic drain voltage} \\
V_{ds} &= \text{intrinsic drain-substrate source voltage} \\
V_{dsat} &= \text{saturation voltage} \\
V_{gs} &= \text{intrinsic gate-intrinsic source voltage} \\
V_{gd} &= \text{intrinsic gate-intrinsic drain voltage} \\
V_t &= kT/q \text{ (thermal voltage)} \\
V_{th} &= \text{threshold voltage} \\
C_{ox} &= \text{the gate oxide capacitance per unit area} \\
f &= \text{noise frequency} \\
k &= \text{Boltzmann's constant} \\
q &= \text{electron charge} \\
Leff &= \text{effective channel length}
\end{aligned}
$$

$$
\begin{aligned}
Weff &= \text{effective channel width} \\
T &= \text{analysis temperature (K)} \\
T_0 &= \text{nominal temperature (set using TNOM option)}
\end{aligned}
$$

Other variables are listed in the BJT Equations section 2.3.16.

## All Levels

$$
\begin{aligned}
I_g &= \text{gate current} = 0 \\
I_b &= \text{bulk current} = I_{bs} + I_{bd} \\
\text{where} & \\
I_{bs} &= \text{bulk-source leakage current} = I_{ss}\left(e^{V_{bs}/(NV_t)} - 1\right) \\
I_{ds} &= \text{bulk-drain leakage current} = I_{ds}\left(e^{V_{bd}/(NV_t)} - 1\right) \\
\text{where} & \\
\mathit{if} & \\
& \mathbf{JS} = 0, \text{ or } \mathbf{AS} = 0 \text{ or } \mathbf{AD} = 0 \\
\mathit{then} & \\
& I_{ss} = \mathbf{IS} \\
& I_{ds} = \mathbf{IS} \\
\mathit{else} & \\
& I_{ss} = \mathrm{AS} \times \mathbf{JS} + \mathrm{PS} \times \mathbf{JSSW} \\
& I_{ds} = \mathrm{AD} \times \mathbf{JS} + \mathrm{PD} \times \mathbf{JSSW} \\
& I_d = \text{drain current} = I_{drain} - I_{bd} \\
& I_s = \text{source current} = -I_{drain} - I_{bs}
\end{aligned}
$$

## Level 1: Idrain

**Normal Mode:** $V_{ds} > 0$

**Case 1**

For cutoff region: $V_{gs} - V_{to} < 0$

$$I_{drain} = 0$$

**Case 2**

For linear region: $V_{ds} < V_{gs} - V_{to}$

$$I_{drain} = (W/L)(\mathbf{KN}/2)(1 + \mathbf{LAMBDA} \times V_{ds})V_{ds}(2(V_{gs} - V_{to}) - V_{ds})$$

**Case 3**

For saturation region: $0 \leq V_{gs} - V_{to} \leq V_{ds}$

$$I_{drain} = (W/L)(\mathbf{KN}/2)(1 + \mathbf{LAMBDA} \cdot V_{ds})(V_{gs} - V_{to})^2$$

where

$$V_{to} = \mathbf{VTO} + \mathbf{GAMMA} \cdot \left((\mathbf{PHI} - V_{bs})^{1/2}\right)^{1/2}$$

**Inverted Mode:** $V_{ds} < 0$

Here, simply switch the source and drain in the normal mode equations given above.

---

**Level 3: Idrain**

See Reference [17] below for detailed information.

## Capacitance

---

**Level 1 and 3**

$$C_{bs} = \text{bulk-source capacitance} = \text{area cap.} + \text{sidewall cap.} + \text{transit time cap.}$$

$$C_{bd} = \text{bulk-drain capacitance} = \text{area cap.} + \text{sidewall cap.} + \text{transit time cap.}$$

*if*

**CBS** = 0 and **CBD** = 0

*then*

$$C_{bs} = \mathrm{AS} \cdot \mathbf{CJ} \cdot C_{bsj} + \mathrm{PS} \cdot \mathbf{CJSW} \cdot C_{bss} + \mathbf{TT} \cdot G_{bs}$$
$$C_{bd} = \mathrm{AD} \cdot \mathbf{CJ} \cdot C_{bdj} + \mathrm{PD} \cdot \mathbf{CJSW} \cdot C_{bds} + \mathbf{TT} \cdot G_{ds}$$

*else*

$$C_{bs} = \mathrm{CBS} \cdot C_{bsj} + \mathrm{PS} \cdot \mathbf{CJSW} \cdot C_{bss} + \mathbf{TT} \cdot G_{bs}$$
$$C_{bd} = \mathrm{CBD} \cdot C_{bdj} + \mathrm{PD} \cdot \mathbf{CJSW} \cdot C_{bds} + \mathbf{TT} \cdot G_{ds}$$

*where*

$$G_{bs} = \text{DC bulk-source conductance} = dI_{bs}/dV_{bs}$$
$$G_{bd} = \text{DC bulk-drain conductance} = dI_{bd}/dV_{bd}$$

*if*

$$V_{bs} \leq \mathbf{FC} \cdot \mathbf{PB}$$

*then*

$$C_{bsj} = (1 - V_{bs}/\mathbf{PB})^{-\mathbf{MJ}}$$
$$C_{bss} = (1 - V_{bs}/\mathbf{PBSW})^{-\mathbf{MJSW}}$$

*if*

$$V_{bs} > \mathbf{FC} \cdot \mathbf{PB}$$

*then*

$$C_{bsj} = (1 - \mathbf{FC})^{-(1+\mathbf{MJ})}(1 - \mathbf{FC}(1 + \mathbf{MJ}) + \mathbf{MJ} \cdot V_{bs}/\mathbf{PB})$$
$$C_{bss} = (1 - \mathbf{FC})^{-(1+\mathbf{MJSW})}(1 - \mathbf{FC}(1 + \mathbf{MJSW}) + \mathbf{MJSW} \cdot V_{bs}/\mathbf{PBSW})$$

*if*

$$V_{bd} \leq \mathbf{FC} \cdot \mathbf{PB}$$

*then*

$$C_{bdj} = (1 - V_{bd}/\mathbf{PB})^{-\mathbf{MJ}}$$
$$C_{bds} = (1 - V_{bd}/\mathbf{PBSW})^{-\mathbf{MJSW}}$$

*if*

$$V_{bd} > \mathbf{FC} \cdot \mathbf{PB}$$

*then*

$$C_{bdj} = (1 - \mathbf{FC})^{-(1+\mathbf{MJ})}(1 - \mathbf{FC}(1 + \mathbf{MJ}) + \mathbf{MJ} \cdot V_{bd}/\mathbf{PB})$$
$$C_{bds} = (1 - \mathbf{FC})^{-(1+\mathbf{MJSW})}(1 - \mathbf{FC}(1 + \mathbf{MJSW}))$$

$$C_{gs} = \text{gate-source overlap capacitance} = \mathbf{CGSO} \cdot \mathbf{W}$$
$$C_{gd} = \text{gate-drain overlap capacitance} = \mathbf{CGDO} \cdot \mathbf{W}$$
$$C_{gb} = \text{gate-bulk overlap capacitance} = \mathbf{CGBO} \cdot \mathbf{L}$$

**All Levels**

$$\mathbf{IS}(T) = \mathbf{IS} \cdot \exp\left(E_g(T_0) \cdot T/T_0 - E_g(T)\right)/V_t$$
$$\mathbf{JS}(T) = \mathbf{JS} \cdot \exp\left(E_g(T_0) \cdot T/T_0 - E_g(T)\right)/V_t$$
$$\mathbf{JSSW}(T) = \mathbf{JSSW} \cdot \exp\left(E_g(T_0) \cdot T/T_0 - E_g(T)\right)/V_t$$
$$\mathbf{PB}(T) = \mathbf{PB} \cdot T/T_0 - 3V_t \ln(T/T_0) - E_g(T_0) \cdot T/T_0 + E_g T$$
$$\mathbf{PBSW}(T) = \mathbf{PBSW} \cdot T/T_0 - 3V_t \ln(T/T_0) - E_g(T_0) \cdot T/T_0 + E_g T$$
$$\mathbf{PHI}(T) = \mathbf{PHI} \cdot T/T_0 - 3V_t \ln(T/T_0) - E_g(T_0) \cdot T/T_0 + E_g T$$

where

$$E_g(T) = \text{silicon bandgap energy} = 1.16 - 0.000702T^2/(T + 1108)$$
$$\mathbf{CBD}(T) = \mathbf{CBD} \cdot (1 + \mathbf{MJ} \cdot (0.0004(T - T_0) + (1 - \mathbf{PB}(T)/\mathbf{PB})))$$
$$\mathbf{CBS}(T) = \mathbf{CBS} \cdot (1 + \mathbf{MJ} \cdot (0.0004(T - T_0) + (1 - \mathbf{PB}(T)/\mathbf{PB})))$$
$$\mathbf{CJ}(T) = \mathbf{CJ} \cdot (1 + \mathbf{MJ} \cdot (0.0004(T - T_0) + (1 - \mathbf{PB}(T)/\mathbf{PB})))$$
$$\mathbf{CJSW}(T) = \mathbf{CJSW} \cdot (1 + \mathbf{MJSW} \cdot (0.0004(T - T_0) + (1 - \mathbf{PB}(T)/\mathbf{PB})))$$
$$\mathbf{KP}(T) = \mathbf{KP} \cdot (T/T_0)^{-3/2}$$
$$\mathbf{UO}(T) = \mathbf{UO} \cdot (T/T_0)^{-3/2}$$
$$\mathbf{MUS}(T) = \mathbf{MUS} \cdot (T/T_0)^{-3/2}$$
$$\mathbf{MUZ}(T) = \mathbf{MUZ} \cdot (T/T_0)^{-3/2}$$
$$\mathbf{X3MS}(T) = \mathbf{X3MS} \cdot (T/T_0)^{-3/2}$$

## Level 1 MOSFET Tables

Table 2.68: MOSFET level 1 Device Instance Parameters

| Parameter | Description | Units | Default |
|---|---|---|---|
| AD | Drain diffusion area | $m^2$ | 0 |
| AS | Source diffusion area | $m^2$ | 0 |
| IC1 | Initial condition on Drain-Source voltage | V | 0 |
| IC2 | Initial condition on Gate-Source voltage | V | 0 |
| IC3 | Initial condition on Bulk-Source voltage | V | 0 |
| L | Channel length | m | 0 |
| M | Multiplier for M devices connected in parallel | – | 1 |
| NRD | Multiplier for RSH to yield parasitic resistance of drain | □ | 1 |
| NRS | Multiplier for RSH to yield parasitic resistance of source | □ | 1 |
| OFF | Initial condition of no voltage drops across device | logical (T/F) | false |
| PD | Drain diffusion perimeter | m | 0 |
| PS | Source diffusion perimeter | m | 0 |
| TEMP | Device temperature | °C | Ambient Temperature |
| W | Channel width | m | 0 |

Table 2.69: MOSFET level 1 Device Model Parameters

| Parameter | Description | Units | Default |
|---|---|---|---|
| AF | Flicker noise exponent | – | 1 |
| CBD | Zero-bias bulk-drain p-n capacitance | F | 0 |
| CBS | Zero-bias bulk-source p-n capacitance | F | 0 |
| CGBO | Gate-bulk overlap capacitance/channel length | F/m | 0 |
| CGDO | Gate-drain overlap capacitance/channel width | F/m | 0 |
| CGSO | Gate-source overlap capacitance/channel width | F/m | 0 |
| CJ | Bulk p-n zero-bias bottom capacitance/area | $F/m^2$ | 0 |
| CJSW | Bulk p-n zero-bias sidewall capacitance/area | $F/m^2$ | 0 |
| FC | Bulk p-n forward-bias capacitance coefficient | – | 0.5 |
| GAMMA | Bulk threshold parameter | $V^{1/2}$ | 0 |
| IS | Bulk p-n saturation current | A | 1e-14 |
| JS | Bulk p-n saturation current density | $A/m^2$ | 0 |

Table 2.69: MOSFET level 1 Device Model Parameters

| Parameter | Description | Units | Default |
|---|---|---|---|
| KF | Flicker noise coefficient | – | 0 |
| KP | Transconductance coefficient | $A/V^2$ | 2e-05 |
| L | Default channel length | m | 0.0001 |
| LAMBDA | Channel-length modulation | $V^{-1}$ | 0 |
| LD | Lateral diffusion length | m | 0 |
| MJ | Bulk p-n bottom grading coefficient | – | 0.5 |
| MJSW | Bulk p-n sidewall grading coefficient | – | 0.5 |
| NSS | Surface state density | $cm^{-2}$ | 0 |
| NSUB | Substrate doping density | $cm^{-3}$ | 0 |
| PB | Bulk p-n bottom potential | V | 0.8 |
| PHI | Surface potential | V | 0.6 |
| RD | Drain ohmic resistance | Ω | 0 |
| RS | Source ohmic resistance | Ω | 0 |
| RSH | Drain,source diffusion sheet resistance | Ω | 0 |
| TEMPMODEL | Specifies the type of parameter interpolation over temperature | – | 'NONE' |
| TNOM | Nominal device temperature | °C | 27 |
| TOX | Gate oxide thickness | m | 1e-07 |
| TPG | Gate material type (-1 = same as substrate) 0 = aluminum,1 = opposite of substrate) | – | 0 |
| UO | Surface mobility | $1/(Vcm^2s)$ | 600 |
| UO | Surface mobility | $1/(Vcm^2s)$ | 600 |
| VTO | Zero-bias threshold voltage | V | 0 |
| W | Default channel width | m | 0.0001 |

## Level 2 MOSFET Tables (SPICE Level 2)

Table 2.70: MOSFET level 2 Device Instance Parameters

| Parameter | Description | Units | Default |
|---|---|---|---|
| AD | Drain diffusion area | $m^2$ | 0 |
| AS | Source diffusion area | $m^2$ | 0 |
| IC1 | Initial condition on Drain-Source voltage | V | 0 |
| IC2 | Initial condition on Gate-Source voltage | V | 0 |
| IC3 | Initial condition on Bulk-Source voltage | V | 0 |
| L | Channel length | m | 0 |
| M | Multiplier for M devices connected in parallel | – | 1 |
| NRD | Multiplier for RSH to yield parasitic resistance of drain | □ | 1 |
| NRS | Multiplier for RSH to yield parasitic resistance of source | □ | 1 |
| OFF | Initial condition of no voltage drops across device | logical (T/F) | false |
| PD | Drain diffusion perimeter | m | 0 |
| PS | Source diffusion perimeter | m | 0 |
| TEMP | Device temperature | °C | Ambient Temperature |
| W | Channel width | m | 0 |

Table 2.71: MOSFET level 2 Device Model Parameters

| Parameter | Description | Units | Default |
|---|---|---|---|
| AF | Flicker noise exponent | – | 1 |
| CBD | Zero-bias bulk-drain p-n capacitance | F | 0 |
| CBS | Zero-bias bulk-source p-n capacitance | F | 0 |
| CGBO | Gate-bulk overlap capacitance/channel length | F/m | 0 |
| CGDO | Gate-drain overlap capacitance/channel width | F/m | 0 |
| CGSO | Gate-source overlap capacitance/channel width | F/m | 0 |
| CJ | Bulk p-n zero-bias bottom capacitance/area | $F/m^2$ | 0 |
| CJSW | Bulk p-n zero-bias sidewall capacitance/area | $F/m^2$ | 0 |
| DELTA | Width effect on threshold | – | 0 |
| FC | Bulk p-n forward-bias capacitance coefficient | – | 0.5 |
| GAMMA | Bulk threshold parameter | $V^{1/2}$ | 0 |
| IS | Bulk p-n saturation current | A | 1e-14 |

Table 2.71: MOSFET level 2 Device Model Parameters

| Parameter | Description | Units | Default |
|---|---|---|---|
| JS | Bulk p-n saturation current density | $A/m^2$ | 0 |
| KF | Flicker noise coefficient | – | 0 |
| KP | Transconductance coefficient | $A/V^2$ | 2e-05 |
| L | Default channel length | m | 0.0001 |
| LAMBDA | Channel-length modulation | $V^{-1}$ | 0 |
| LD | Lateral diffusion length | m | 0 |
| MJ | Bulk p-n bottom grading coefficient | – | 0.5 |
| MJSW | Bulk p-n sidewall grading coefficient | – | 0.5 |
| NEFF | Total channel charge coeff. | – | 1 |
| NFS | Fast surface state density | – | 0 |
| NSS | Surface state density | $cm^{-2}$ | 0 |
| NSUB | Substrate doping density | $cm^{-3}$ | 0 |
| PB | Bulk p-n bottom potential | V | 0.8 |
| PHI | Surface potential | V | 0.6 |
| RD | Drain ohmic resistance | Ω | 0 |
| RS | Source ohmic resistance | Ω | 0 |
| RSH | Drain,source diffusion sheet resistance | Ω | 0 |
| TEMPMODEL | Specifies the type of parameter interpolation over temperature | – | 'NONE' |
| TNOM | Nominal device temperature | °C | 27 |
| TOX | Gate oxide thickness | m | 1e-07 |
| TPG | Gate material type (-1 = same as substrate, 0 = aluminum,1 = opposite of substrate) | – | 0 |
| UO | Surface mobility | $1/(Vcm^2s)$ | 600 |
| UCRIT | Crit. field for mob. degradation | – | 10000 |
| UEXP | Crit. field exp for mob. deg. | – | 0 |
| UO | Surface mobility | $1/(Vcm^2s)$ | 600 |
| VMAX | Maximum carrier drift velocity | – | 0 |
| VTO | Zero-bias threshold voltage | V | 0 |
| W | Default channel width | m | 0.0001 |
| XJ | Junction depth | – | 0 |

## Level 3 MOSFET Tables

Table 2.72: MOSFET level 3 Device Instance Parameters

| Parameter | Description | Units | Default |
|---|---|---|---|
| AD | Drain diffusion area | $m^2$ | 0 |
| AS | Source diffusion area | $m^2$ | 0 |
| IC1 | Initial condition on Drain-Source voltage | V | 0 |
| IC2 | Initial condition on Gate-Source voltage | V | 0 |
| IC3 | Initial condition on Bulk-Source voltage | V | 0 |
| L | Channel length | m | 0 |
| M | Multiplier for M devices connected in parallel | – | 1 |
| NRD | Multiplier for RSH to yield parasitic resistance of drain | □ | 1 |
| NRS | Multiplier for RSH to yield parasitic resistance of source | □ | 1 |
| OFF | Initial condition of no voltage drops across device | logical (T/F) | false |
| PD | Drain diffusion perimeter | m | 0 |
| PS | Source diffusion perimeter | m | 0 |
| TEMP | Device temperature | °C | Ambient Temperature |
| W | Channel width | m | 0 |

Table 2.73: MOSFET level 3 Device Model Parameters

| Parameter | Description | Units | Default |
|---|---|---|---|
| AF | Flicker noise exponent | – | 1 |
| CBD | Zero-bias bulk-drain p-n capacitance | F | 0 |
| CBS | Zero-bias bulk-source p-n capacitance | F | 0 |
| CGBO | Gate-bulk overlap capacitance/channel length | F/m | 0 |
| CGDO | Gate-drain overlap capacitance/channel width | F/m | 0 |
| CGSO | Gate-source overlap capacitance/channel width | F/m | 0 |
| CJ | Bulk p-n zero-bias bottom capacitance/area | $F/m^2$ | 0 |
| CJSW | Bulk p-n zero-bias sidewall capacitance/area | $F/m^2$ | 0 |
| DELTA | Width effect on threshold | – | 0 |
| ETA | Static feedback | – | 0 |
| FC | Bulk p-n forward-bias capacitance coefficient | – | 0.5 |
| GAMMA | Bulk threshold parameter | $V^{1/2}$ | 0 |

Table 2.73: MOSFET level 3 Device Model Parameters

| Parameter | Description | Units | Default |
|---|---|---|---|
| IS | Bulk p-n saturation current | A | 1e-14 |
| JS | Bulk p-n saturation current density | $A/m^2$ | 0 |
| KAPPA | Saturation field factor | – | 0.2 |
| KF | Flicker noise coefficient | – | 0 |
| KP | Transconductance coefficient | $A/V^2$ | 2e-05 |
| L | Default channel length | m | 0.0001 |
| LD | Lateral diffusion length | m | 0 |
| MJ | Bulk p-n bottom grading coefficient | – | 0.5 |
| MJSW | Bulk p-n sidewall grading coefficient | – | 0.33 |
| NFS | Fast surface state density | $cm^{-2}$ | 0 |
| NSS | Surface state density | $cm^{-2}$ | 0 |
| NSUB | Substrate doping density | $cm^{-3}$ | 0 |
| PB | Bulk p-n bottom potential | V | 0.8 |
| PHI | Surface potential | V | 0.6 |
| RD | Drain ohmic resistance | Ω | 0 |
| RS | Source ohmic resistance | Ω | 0 |
| RSH | Drain,source diffusion sheet resistance | Ω | 0 |
| TEMPMODEL | Specifies the type of parameter interpolation over temperature | – | 'NONE' |
| THETA | Mobility modulation | $V^{-1}$ | 0 |
| TNOM | Nominal device temperature | °C | 27 |
| TOX | Gate oxide thickness | m | 1e-07 |
| TPG | Gate material type (-1 = same as substrate,0 = aluminum,1 = opposite of substrate) | – | 1 |
| UO | Surface mobility | $1/(Vcm^2s)$ | 600 |
| UO | Surface mobility | $1/(Vcm^2s)$ | 600 |
| VMAX | Maximum drift velocity | m/s | 0 |
| VTO | Zero-bias threshold voltage | V | 0 |
| W | Default channel width | m | 0.0001 |
| XJ | Metallurgical junction depth | m | 0 |

## Level 6 MOSFET Tables (SPICE Level 6)

Table 2.74: MOSFET level 6 Device Instance Parameters

| Parameter | Description | Units | Default |
|---|---|---|---|
| AD | Drain diffusion area | $m^2$ | 0 |
| AS | Source diffusion area | $m^2$ | 0 |
| IC1 | Initial condition on Drain-Source voltage | V | 0 |
| IC2 | Initial condition on Gate-Source voltage | V | 0 |
| IC3 | Initial condition on Bulk-Source voltage | V | 0 |
| L | Channel length | m | 0 |
| M | Multiplier for M devices connected in parallel | – | 1 |
| NRD | Multiplier for RSH to yield parasitic resistance of drain | □ | 1 |
| NRS | Multiplier for RSH to yield parasitic resistance of source | □ | 1 |
| OFF | Initial condition of no voltage drops across device | logical (T/F) | false |
| PD | Drain diffusion perimeter | m | 0 |
| PS | Source diffusion perimeter | m | 0 |
| TEMP | Device temperature | °C | Ambient Temperature |
| W | Channel width | m | 0 |

Table 2.75: MOSFET level 6 Device Model Parameters

| Parameter | Description | Units | Default |
|---|---|---|---|
| AF | Flicker noise exponent | – | 1 |
| CBD | Zero-bias bulk-drain p-n capacitance | F | 0 |
| CBS | Zero-bias bulk-source p-n capacitance | F | 0 |
| CGBO | Gate-bulk overlap capacitance/channel length | F/m | 0 |
| CGDO | Gate-drain overlap capacitance/channel width | F/m | 0 |
| CGSO | Gate-source overlap capacitance/channel width | F/m | 0 |
| CJ | Bulk p-n zero-bias bottom capacitance/area | $F/m^2$ | 0 |
| CJSW | Bulk p-n zero-bias sidewall capacitance/area | $F/m^2$ | 0 |
| FC | Bulk p-n forward-bias capacitance coefficient | – | 0.5 |
| GAMMA | Bulk threshold parameter | – | 0 |
| GAMMA1 | Bulk threshold parameter 1 | – | 0 |
| IS | Bulk p-n saturation current | A | 1e-14 |

Table 2.75: MOSFET level 6 Device Model Parameters

| Parameter | Description | Units | Default |
|---|---|---|---|
| JS | Bulk p-n saturation current density | $A/m^2$ | 0 |
| KC | Saturation current factor | – | 5e-05 |
| KF | Flicker noise coefficient | – | 0 |
| KV | Saturation voltage factor | – | 2 |
| LAMBDA | Channel length modulation param. | – | 0 |
| LAMBDA0 | Channel length modulation param. 0 | – | 0 |
| LAMBDA1 | Channel length modulation param. 1 | – | 0 |
| LD | Lateral diffusion length | m | 0 |
| MJ | Bulk p-n bottom grading coefficient | – | 0.5 |
| MJSW | Bulk p-n sidewall grading coefficient | – | 0.5 |
| NC | Saturation current coeff. | – | 1 |
| NSS | Surface state density | $cm^{-2}$ | 0 |
| NSUB | Substrate doping density | $cm^{-3}$ | 0 |
| NV | Saturation voltage coeff. | – | 0.5 |
| NVTH | Threshold voltage coeff. | – | 0.5 |
| PB | Bulk p-n bottom potential | V | 0.8 |
| PHI | Surface potential | V | 0.6 |
| PS | Sat. current modification par. | – | 0 |
| RD | Drain ohmic resistance | Ω | 0 |
| RS | Source ohmic resistance | Ω | 0 |
| RSH | Drain,source diffusion sheet resistance | Ω | 0 |
| SIGMA | Static feedback effect par. | – | 0 |
| TEMPMODEL | Specifies the type of parameter interpolation over temperature | – | 'NONE' |
| TNOM | Nominal device temperature | °C | 27 |
| TOX | Gate oxide thickness | m | 1e-07 |
| TPG | Gate material type (-1 = same as substrate,0 = aluminum,1 = opposite of substrate) | – | 1 |
| UO | Surface mobility | $1/(Vcm^2s)$ | 600 |
| UO | Surface mobility | $1/(Vcm^2s)$ | 600 |
| VTO | Zero-bias threshold voltage | V | 0 |

## Level 9 MOSFET Tables (BSIM3)

For complete documentation of the BSIM3 model, see the users' manual for the BSIM3, available for download at `http://www-device.eecs.berkeley.edu/bsim/?page=BSIM3`. **Xyce** implements Version 3.2.2 of the BSIM3, you will have to get the documentation from the FTP archive on the Berkeley site.

In addition to the parameters shown in table 2.76, the BSIM3 supports a vector parameter for the initial conditions. `IC1` through `IC3` may therefore be specified compactly as `IC=<ic1>,<ic2>,<ic3>`.

**NOTE: Many BSIM3 parameters listed in tables 2.76 and 2.77 as having default values of zero are actually replaced with internally computed defaults if not given. Specifying zero in your model card will override this internal computation. It is recommended that you only set model parameters that you are actually changing from defaults and that you not generate model cards containing default values from the tables.**

Table 2.76: BSIM3 Device Instance Parameters

| Parameter | Description | Units | Default |
|---|---|---|---|
| | ***Control Parameters*** | | |
| M | Multiplier for M devices connected in parallel | – | 1 |
| NQSMOD | Flag for NQS model | – | 0 |
| | ***Geometry Parameters*** | | |
| AD | Drain diffusion area | $m^2$ | 0 |
| AS | Source diffusion area | $m^2$ | 0 |
| L | Channel length | m | 0 |
| NRD | Multiplier for RSH to yield parasitic resistance of drain | □ | 1 |
| NRS | Multiplier for RSH to yield parasitic resistance of source | □ | 1 |
| PD | Drain diffusion perimeter | m | 0 |
| PS | Source diffusion perimeter | m | 0 |
| W | Channel width | m | 0 |
| | ***Temperature Parameters*** | | |
| TEMP | Device temperature | °C | Ambient Temperature |
| | ***Voltage Parameters*** | | |
| IC1 | Initial condition on Vds | V | 0 |
| IC2 | Initial condition on Vgs | V | 0 |
| IC3 | Initial condition on Vbs | V | 0 |
| OFF | Initial condition of no voltage drops accross device | logical (T/F) | false |

Table 2.77: BSIM3 Device Model Parameters

| Parameter | Description | Units | Default |
|---|---|---|---|
| | ***Bin Parameters*** | | |
| LMAX | Maximum channel length | m | 1 |
| LMIN | Minimum channel length | m | 0 |
| WMAX | Maximum channel width | m | 1 |
| WMIN | Minimum channel width | m | 0 |
| | ***Capacitance Parameters*** | | |
| ACDE | Exponetial coefficient for charge thickness in capmod = 3 for accumulation and depletion regions | m/V | 1 |
| CF | Firing field capacitance | F/m | 0 |
| CGBO | Gate-bulk overlap capacitance per unit channel length | F/m | 0 |
| CGDL | Light-doped drain-gate region overlap capacitance | F/m | 0 |
| CGDO | Non-LLD region drain-gate overlap capacitance per unit channel length | F/m | 0 |
| CGSL | Light-doped source-gate region overlap capacitance | F/m | 0 |
| CGSO | Non-LLD region source-gate overlap capacitance per unit channel length | F/m | 0 |
| CJ | Bulk p-n zero-bias bottom capacitance/area | $F/m^2$ | 0.0005 |
| CJSW | Bulk p-n zero-bias sidewall capacitance/area | $F/m^2$ | 5e-10 |
| CJSWG | Source/grain gate sidewall junction capacitance per unit width | F/m | 0 |
| CKAPPA | Coefficient for lightly doped region overlap capacitance fireing field capacitance | F/m | 0.6 |
| CLC | Constant term for short-channel model | m | 1e-07 |
| CLE | Exponetial term for the short-channel model | – | 0.6 |
| DLC | Length offset fitting parameter from C-V | m | 0 |
| DWC | Width offset fitting parameter from C-V | m | 0 |
| MJSWG | Source/grain gate sidewall junction capacitance grading coeficient | – | 0 |
| MOIN | Coefficient for the gate-bias dependent surface potential | – | 15 |
| NOFF | CV parameter in Vgsteff,CV for weak to strong inversion | – | 1 |
| PBSW | Source/drain side junction built-in potential | V | 1 |
| PBSWG | Source/drain gate sidewall junction built-in potential | V | 0 |

Table 2.77: BSIM3 Device Model Parameters

| Parameter | Description | Units | Default |
|---|---|---|---|
| VFBCV | Flat-band voltage parameter (for CAPMOD = 0 only) | V | -1 |
| VOFFCV | CV parameter in Vgsteff,CV for weak to strong inversion | V | 0 |
| XPART | Charge partitioning rate flag | – | 0 |
| | ***Control Parameters*** | | |
| BINUNIT | Binning unit selector | – | 1 |
| CAPMOD | Flag for capacitance models | – | 3 |
| MOBMOD | Mobility model selector | – | 1 |
| NOIMOD | Flag for noise models | – | 1 |
| PARAMCHK | Parameter value check | – | 0 |
| VERSION | Version number | – | '3.2.2' |
| | ***DC Parameters*** | | |
| A0 | Bulk charge effect coefficient for channel length | – | 1 |
| A1 | First non-saturation effect parameter | $V^{-1}$ | 0 |
| A2 | Second non-saturation factor | – | 1 |
| AGS | Gate-bias coefficient of abulk | $V^{-1}$ | 0 |
| ALPHA0 | First parameter of impact-ionization current | m/V | 0 |
| ALPHA1 | Isub parameter for length scaling | $V^{-1}$ | 0 |
| B0 | Bulk charge effect coefficient for channel width | m | 0 |
| B1 | Bulk charge effect offset | m | 0 |
| BETA0 | Second parameter of impact-ionization current | V | 30 |
| CDSC | Drain/source to channel coupling capacitance | $F/m^2$ | 0.00024 |
| CDSCB | Body-bias sensitivity of CDSC | $F/(Vm^2)$ | 0 |
| CDSCD | Drain-bias sensitivity of CDSC | $F/(Vm^2)$ | 0 |
| CIT | Interface trap capacitance | $F/m^2$ | 0 |
| DELTA | Effective Vds parameter | V | 0.01 |
| DROUT | L-depedance Coefficient of the DIBL correction parameter in Rout | – | 0.56 |
| DSUB | DIBL coefficient exponent in subthreshhold region | – | 0 |
| DVT0 | First coefficient of short-channel effect effect on threshold voltage | – | 2.2 |
| DVT0W | First coefficient of narrow-width effect effect on threshold voltage for small channel length | $m^{-1}$ | 0 |
| DVT1 | Second coefficient of short-channel effect effect on threshold voltage | – | 0.53 |

Table 2.77: BSIM3 Device Model Parameters

| Parameter | Description | Units | Default |
|---|---|---|---|
| DVT1W | Second coefficient of narrow-width effect effect on threshold voltage for small channel length | $m^{-1}$ | 5.3e+06 |
| DVT2 | Body-bias coefficient of short-channel effect effect on threshold voltage | $V^{-1}$ | -0.032 |
| DVT2W | Body-bias coefficient of narrow-width effect effect on threshold voltage for small channel length | $V^{-1}$ | -0.032 |
| DWB | Coefficient of substrate body bias dependence of Weff | $m/V^{1/2}$ | 0 |
| DWG | Coefficient of gate depedence of Weff | $m/V^{1/2}$ | 0 |
| ETA0 | DIBL coefficient in subthreshold region | – | 0.08 |
| ETAB | Body-bias coefficient for the subthreshold DIBL effect | $V^{-1}$ | -0.07 |
| IJTH | Diode limiting current | A | 0.1 |
| JSW | Sidewall saturation current per unit length | A/m | 0 |
| K1 | First-order body effect coefficient | $V^{1/2}$ | 0 |
| K2 | second-order body effect coefficient | – | 0 |
| K3 | Narrow width coefficient | – | 80 |
| K3B | Body effect coefficient of K3 | $V^{-1}$ | 0 |
| KETA | Body-bias coefficient of bulk charge effect | $V^{-1}$ | -0.047 |
| LINT | Length of offset fiting parameter from I-V without bias | m | 0 |
| LINTNOI | lint offset for noise calculation | m | 0 |
| NFACTOR | Subthreshold swing factor | – | 1 |
| NGATE | Poly gate doping concentration | $cm^{-3}$ | 0 |
| NLX | Lateral non-uniform doping parameter | m | 1.74e-07 |
| PCLM | Channel length modulation parameter | – | 1.3 |
| PDIBLC1 | First output resistance DIBL effect correction parameter | – | 0.39 |
| PDIBLC2 | Second output resistance DIBL effect correction parameter | – | 0.0086 |
| PDIBLCB | Body effect coefficient of DIBL correction parameter | $V^{-1}$ | 0 |
| PRWB | Body effect coefficient of RDSW | $V^{-1/2}$ | 0 |
| PRWG | Gate-bias effect coefficient of RDSW | $V^{-1}$ | 0 |
| PSCBE1 | First substrate current body effect parameter | V/m | 4.24e+08 |
| PSCBE2 | second substrate current body effect parameter | V/m | 1e-05 |
| PVAG | Gate dependence of early voltage | – | 0 |
| RDSW | Parasitic resistance per unit width | $\Omega\ \mu m$ | 0 |

Table 2.77: BSIM3 Device Model Parameters

| Parameter | Description | Units | Default |
|---|---|---|---|
| UA | First-order mobility degradation coefficient | m/V | 2.25e-09 |
| UB | First-order mobility degradation coefficient | $m^2/V^2$ | 5.87e-19 |
| UC | Body effect of mobility degridation coefficient | $m/V^2$ | 0 |
| VBM | Maximum applied body-bias in threshold voltage calculation | V | -3 |
| VFB | Flat-band voltage | V | 0 |
| VOFF | Offset voltage in the subthreshold region at large W and L | V | -0.08 |
| VSAT | Saturation velocity at temp = TNOM | m/s | 80000 |
| VTH0 | Threshold voltage at Vbs = 0 for large L | V | 0 |
| W0 | Narrow-width paameter | m | 2.5e-06 |
| WINT | Width-offset fitting parameter from I-V without bias | m | 0 |
| WR | Width offset from Weff for Rds Calculation | – | 1 |
| ***Dependency Parameters*** | | | |
| LA0 | Length dependence of A0 | m | 0 |
| LA1 | Length dependence of A1 | m/V | 0 |
| LA2 | Length dependence of A2 | m | 0 |
| LACDE | Length dependence of ACDE | $m^2/V$ | 0 |
| LAGS | Length dependence of AGS | m/V | 0 |
| LALPHA0 | Length dependence of ALPHA0 | $m^2/V$ | 0 |
| LALPHA1 | Length dependence of ALPHA1 | m/V | 0 |
| LAT | Length dependence of AT | $m^2/s$ | 0 |
| LB0 | Length dependence of B0 | $m^2$ | 0 |
| LB1 | Length dependence of B1 | $m^2$ | 0 |
| LBETA0 | Length dependence of BETA0 | Vm | 0 |
| LCDSC | Length dependence of CDSC | F/m | 0 |
| LCDSCB | Length dependence of CDSCB | F/(Vm) | 0 |
| LCDSCD | Length dependence of CDSCD | F/(Vm) | 0 |
| LCF | Length dependence of CF | F | 0 |
| LCGDL | Length dependence of CGDL | F | 0 |
| LCGSL | Length dependence of CGSL | F | 0 |
| LCIT | Length dependence of CIT | F/m | 0 |
| LCKAPPA | Length dependence of CKAPPA | F | 0 |
| LCLC | Length dependence of CLC | $m^2$ | 0 |
| LCLE | Length dependence of CLE | m | 0 |

Table 2.77: BSIM3 Device Model Parameters

| Parameter | Description | Units | Default |
|---|---|---|---|
| LDELTA | Length dependence of DELTA | Vm | 0 |
| LDROUT | Length dependence of DROUT | m | 0 |
| LDSUB | Length dependence of DSUB | m | 0 |
| LDVT0 | Length dependence of DVT0 | m | 0 |
| LDVT0W | Length dependence of DVT0W | – | 0 |
| LDVT1 | Length dependence of DVT1 | m | 0 |
| LDVT1W | Length dependence of DVT1W | – | 0 |
| LDVT2 | Length dependence of DVT2 | m/V | 0 |
| LDVT2W | Length dependence of DVT2W | m/V | 0 |
| LDWB | Length dependence of DWB | $m^2/V^{1/2}$ | 0 |
| LDWG | Length dependence of DWG | $m^2/V^{1/2}$ | 0 |
| LELM | Length dependence of ELM | m | 0 |
| LETA0 | Length dependence of ETA0 | m | 0 |
| LETAB | Length dependence of ETAB | m/V | 0 |
| LGAMMA1 | Length dependence of GAMMA1 | $V^{1/2}m$ | 0 |
| LGAMMA2 | Length dependence of GAMMA2 | $V^{1/2}m$ | 0 |
| LK1 | Length dependence of K1 | $V^{1/2}m$ | 0 |
| LK2 | Length dependence of K2 | m | 0 |
| LK3 | Length dependence of K3 | m | 0 |
| LK3B | Length dependence of K3B | m/V | 0 |
| LKETA | Length dependence of KETA | m/V | 0 |
| LKT1 | Length dependence of KT1 | Vm | 0 |
| LKT1L | Length dependence of KT1L | $Vm^2$ | 0 |
| LKT2 | Length dependence of KT2 | m | 0 |
| LMOIN | Length dependence of MOIN | m | 0 |
| LNCH | Length dependence of NCH | $m/cm^3$ | 0 |
| LNFACTOR | Length dependence of NFACTOR | m | 0 |
| LNGATE | Length dependence of NGATE | $m/cm^3$ | 0 |
| LNLX | Length dependence of NLX | $m^2$ | 0 |
| LNOFF | Length dependence of NOFF | m | 0 |
| LNSUB | Length dependence of NSUB | $m/cm^3$ | 0 |
| LPCLM | Length dependence of PCLM | m | 0 |
| LPDIBLC1 | Length dependence of PDIBLC1 | m | 0 |
| LPDIBLC2 | Length dependence of PDIBLC2 | m | 0 |
| LPDIBLCB | Length dependence of PDIBLCB | m/V | 0 |

Table 2.77: BSIM3 Device Model Parameters

| Parameter | Description | Units | Default |
|---|---|---|---|
| LPRT | Length dependence of PRT | $\Omega\ \mu$m m | 0 |
| LPRWB | Length dependence of PRWB | m/V$^{1/2}$ | 0 |
| LPRWG | Length dependence of PRWG | m/V | 0 |
| LPSCBE1 | Length dependence of PSCBE1 | V | 0 |
| LPSCBE2 | Length dependence of PSCBE2 | V | 0 |
| LPVAG | Length dependence of PVAG | m | 0 |
| LRDSW | Length dependence of RDSW | $\Omega\ \mu$m m | 0 |
| LU0 | Length dependence of U0 | m/(Vcm$^2$s) | 0 |
| LUA | Length dependence of UA | m$^2$/V | 0 |
| LUA1 | Length dependence of UA1 | m$^2$/V | 0 |
| LUB | Length dependence of UB | m$^3$/V$^2$ | 0 |
| LUB1 | Length dependence of UB1 | m$^3$/V$^2$ | 0 |
| LUC | Length dependence of UC | m$^2$/V$^2$ | 0 |
| LUC1 | Length dependence of UC1 | m$^2$/($^\circ$CV$^2$) | 0 |
| LUTE | Length dependence of UTE | m | 0 |
| LVBM | Length dependence of VBM | Vm | 0 |
| LVBX | Length dependence of VBX | Vm | 0 |
| LVFB | Length dependence of VFB | Vm | 0 |
| LVFBCV | Length dependence of VFBCV | Vm | 0 |
| LVOFF | Length dependence of VOFF | Vm | 0 |
| LVOFFCV | Length dependence of VOFFCV | Vm | 0 |
| LVSAT | Length dependence of VSAT | m$^2$/s | 0 |
| LVTH0 | Length dependence of VTH0 | Vm | 0 |
| LW0 | Length dependence of W0 | m$^2$ | 0 |
| LWR | Length dependence of WR | m | 0 |
| LXJ | Length dependence of XJ | m$^2$ | 0 |
| LXT | Length dependence of XT | m$^2$ | 0 |
| PA0 | Cross-term dependence of A0 | m | 0 |
| PA1 | Cross-term dependence of A1 | m/V | 0 |
| PA2 | Cross-term dependence of A2 | m | 0 |
| PACDE | Cross-term dependence of ACDE | m$^2$/V | 0 |
| PAGS | Cross-term dependence of AGS | m/V | 0 |
| PALPHA0 | Cross-term dependence of ALPHA0 | m$^2$/V | 0 |
| PALPHA1 | Cross-term dependence of ALPHA1 | m/V | 0 |
| PAT | Cross-term dependence of AT | m$^2$/s | 0 |

Table 2.77: BSIM3 Device Model Parameters

| Parameter | Description | Units | Default |
|---|---|---|---|
| PB0 | Cross-term dependence of B0 | $m^2$ | 0 |
| PB1 | Cross-term dependence of B1 | $m^2$ | 0 |
| PBETA0 | Cross-term dependence of BETA0 | Vm | 0 |
| PCDSC | Cross-term dependence of CDSC | F/m | 0 |
| PCDSCB | Cross-term dependence of CDSCB | F/(Vm) | 0 |
| PCDSCD | Cross-term dependence of CDSCD | F/(Vm) | 0 |
| PCF | Cross-term dependence of CF | F | 0 |
| PCGDL | Cross-term dependence of CGDL | F | 0 |
| PCGSL | Cross-term dependence of CGSL | F | 0 |
| PCIT | Cross-term dependence of CIT | F/m | 0 |
| PCKAPPA | Cross-term dependence of CKAPPA | F | 0 |
| PCLC | Cross-term dependence of CLC | $m^2$ | 0 |
| PCLE | Cross-term dependence of CLE | m | 0 |
| PDELTA | Cross-term dependence of DELTA | Vm | 0 |
| PDROUT | Cross-term dependence of DROUT | m | 0 |
| PDSUB | Cross-term dependence of DSUB | m | 0 |
| PDVT0 | Cross-term dependence of DVT0 | m | 0 |
| PDVT0W | Cross-term dependence of DVT0W | – | 0 |
| PDVT1 | Cross-term dependence of DVT1 | m | 0 |
| PDVT1W | Cross-term dependence of DVT1W | – | 0 |
| PDVT2 | Cross-term dependence of DVT2 | m/V | 0 |
| PDVT2W | Cross-term dependence of DVT2W | m/V | 0 |
| PDWB | Cross-term dependence of DWB | $m^2/V^{1/2}$ | 0 |
| PDWG | Cross-term dependence of DWG | $m^2/V^{1/2}$ | 0 |
| PELM | Cross-term dependence of ELM | m | 0 |
| PETA0 | Cross-term dependence of ETA0 | m | 0 |
| PETAB | Cross-term dependence of ETAB | m/V | 0 |
| PGAMMA1 | Cross-term dependence of GAMMA1 | $V^{1/2}m$ | 0 |
| PGAMMA2 | Cross-term dependence of GAMMA2 | $V^{1/2}m$ | 0 |
| PK1 | Cross-term dependence of K1 | $V^{1/2}m$ | 0 |
| PK2 | Cross-term dependence of K2 | m | 0 |
| PK3 | Cross-term dependence of K3 | m | 0 |
| PK3B | Cross-term dependence of K3B | m/V | 0 |
| PKETA | Cross-term dependence of KETA | m/V | 0 |
| PKT1 | Cross-term dependence of KT1 | Vm | 0 |

Table 2.77: BSIM3 Device Model Parameters

| Parameter | Description | Units | Default |
|---|---|---|---|
| PKT1L | Cross-term dependence of KT1L | $Vm^2$ | 0 |
| PKT2 | Cross-term dependence of KT2 | m | 0 |
| PMOIN | Cross-term dependence of MOIN | m | 0 |
| PNCH | Cross-term dependence of NCH | $m/cm^3$ | 0 |
| PNFACTOR | Cross-term dependence of NFACTOR | m | 0 |
| PNGATE | Cross-term dependence of NGATE | $m/cm^3$ | 0 |
| PNLX | Cross-term dependence of NLX | $m^2$ | 0 |
| PNOFF | Cross-term dependence of NOFF | m | 0 |
| PNSUB | Cross-term dependence of NSUB | $m/cm^3$ | 0 |
| PPCLM | Cross-term dependence of PCLM | m | 0 |
| PPDIBLC1 | Cross-term dependence of PDIBLC1 | m | 0 |
| PPDIBLC2 | Cross-term dependence of PDIBLC2 | m | 0 |
| PPDIBLCB | Cross-term dependence of PDIBLCB | m/V | 0 |
| PPRT | Cross-term dependence of PRT | $\Omega\ \mu m$ m | 0 |
| PPRWB | Cross-term dependence of PRWB | $m/V^{1/2}$ | 0 |
| PPRWG | Cross-term dependence of PRWG | m/V | 0 |
| PPSCBE1 | Cross-term dependence of PSCBE1 | V | 0 |
| PPSCBE2 | Cross-term dependence of PSCBE2 | V | 0 |
| PPVAG | Cross-term dependence of PVAG | m | 0 |
| PRDSW | Cross-term dependence of RDSW | $\Omega\ \mu m$ m | 0 |
| PU0 | Cross-term dependence of U0 | $m/(Vcm^2s)$ | 0 |
| PUA | Cross-term dependence of UA | $m^2/V$ | 0 |
| PUA1 | Cross-term dependence of UA1 | $m^2/V$ | 0 |
| PUB | Cross-term dependence of UB | $m^3/V^2$ | 0 |
| PUB1 | Cross-term dependence of UB1 | $m^3/V^2$ | 0 |
| PUC | Cross-term dependence of UC | $m^2/V^2$ | 0 |
| PUC1 | Cross-term dependence of UC1 | $m^2/(^\circ CV^2)$ | 0 |
| PUTE | Cross-term dependence of UTE | m | 0 |
| PVBM | Cross-term dependence of VBM | Vm | 0 |
| PVBX | Cross-term dependence of VBX | Vm | 0 |
| PVFB | Cross-term dependence of VFB | Vm | 0 |
| PVFBCV | Cross-term dependence of VFBCV | Vm | 0 |
| PVOFF | Cross-term dependence of VOFF | Vm | 0 |
| PVOFFCV | Cross-term dependence of VOFFCV | Vm | 0 |
| PVSAT | Cross-term dependence of VSAT | $m^2/s$ | 0 |

Table 2.77: BSIM3 Device Model Parameters

| Parameter | Description | Units | Default |
|---|---|---|---|
| PVTH0 | Cross-term dependence of VTH0 | Vm | 0 |
| PW0 | Cross-term dependence of W0 | $m^2$ | 0 |
| PWR | Cross-term dependence of WR | m | 0 |
| PXJ | Cross-term dependence of XJ | $m^2$ | 0 |
| PXT | Cross-term dependence of XT | $m^2$ | 0 |
| WA0 | Width dependence of A0 | m | 0 |
| WA1 | Width dependence of A1 | m/V | 0 |
| WA2 | Width dependence of A2 | m | 0 |
| WACDE | Width dependence of ACDE | $m^2$/V | 0 |
| WAGS | Width dependence of AGS | m/V | 0 |
| WALPHA0 | Width dependence of ALPHA0 | $m^2$/V | 0 |
| WALPHA1 | Width dependence of ALPHA1 | m/V | 0 |
| WAT | Width dependence of AT | $m^2$/s | 0 |
| WB0 | Width dependence of B0 | $m^2$ | 0 |
| WB1 | Width dependence of B1 | $m^2$ | 0 |
| WBETA0 | Width dependence of BETA0 | Vm | 0 |
| WCDSC | Width dependence of CDSC | F/m | 0 |
| WCDSCB | Width dependence of CDSCB | F/(Vm) | 0 |
| WCDSCD | Width dependence of CDSCD | F/(Vm) | 0 |
| WCF | Width dependence of CF | F | 0 |
| WCGDL | Width dependence of CGDL | F | 0 |
| WCGSL | Width dependence of CGSL | F | 0 |
| WCIT | Width dependence of CIT | F/m | 0 |
| WCKAPPA | Width dependence of CKAPPA | F | 0 |
| WCLC | Width dependence of CLC | $m^2$ | 0 |
| WCLE | Width dependence of CLE | m | 0 |
| WDELTA | Width dependence of DELTA | Vm | 0 |
| WDROUT | Width dependence of DROUT | m | 0 |
| WDSUB | Width dependence of DSUB | m | 0 |
| WDVT0 | Width dependence of DVT0 | m | 0 |
| WDVT0W | Width dependence of DVT0W | – | 0 |
| WDVT1 | Width dependence of DVT1 | m | 0 |
| WDVT1W | Width dependence of DVT1W | – | 0 |
| WDVT2 | Width dependence of DVT2 | m/V | 0 |
| WDVT2W | Width dependence of DVT2W | m/V | 0 |

Table 2.77: BSIM3 Device Model Parameters

| Parameter | Description | Units | Default |
|---|---|---|---|
| WDWB | Width dependence of DWB | $m^2/V^{1/2}$ | 0 |
| WDWG | Width dependence of DWG | $m^2/V^{1/2}$ | 0 |
| WELM | Width dependence of ELM | m | 0 |
| WETA0 | Width dependence of ETA0 | m | 0 |
| WETAB | Width dependence of ETAB | m/V | 0 |
| WGAMMA1 | Width dependence of GAMMA1 | $V^{1/2}m$ | 0 |
| WGAMMA2 | Width dependence of GAMMA2 | $V^{1/2}m$ | 0 |
| WK1 | Width dependence of K1 | $V^{1/2}m$ | 0 |
| WK2 | Width dependence of K2 | m | 0 |
| WK3 | Width dependence of K3 | m | 0 |
| WK3B | Width dependence of K3B | m/V | 0 |
| WKETA | Width dependence of KETA | m/V | 0 |
| WKT1 | Width dependence of KT1 | Vm | 0 |
| WKT1L | Width dependence of KT1L | $Vm^2$ | 0 |
| WKT2 | Width dependence of KT2 | m | 0 |
| WMOIN | Width dependence of MOIN | m | 0 |
| WNCH | Width dependence of NCH | $m/cm^3$ | 0 |
| WNFACTOR | Width dependence of NFACTOR | m | 0 |
| WNGATE | Width dependence of NGATE | $m/cm^3$ | 0 |
| WNLX | Width dependence of NLX | $m^2$ | 0 |
| WNOFF | Width dependence of NOFF | m | 0 |
| WNSUB | Width dependence of NSUB | $m/cm^3$ | 0 |
| WPCLM | Width dependence of PCLM | m | 0 |
| WPDIBLC1 | Width dependence of PDIBLC1 | m | 0 |
| WPDIBLC2 | Width dependence of PDIBLC2 | m | 0 |
| WPDIBLCB | Width dependence of PDIBLCB | m/V | 0 |
| WPRT | Width dependence of PRT | $\Omega\ \mu m\ m$ | 0 |
| WPRWB | Width dependence of PRWB | $m/V^{1/2}$ | 0 |
| WPRWG | Width dependence of PRWG | m/V | 0 |
| WPSCBE1 | Width dependence of PSCBE1 | V | 0 |
| WPSCBE2 | Width dependence of PSCBE2 | V | 0 |
| WPVAG | Width dependence of PVAG | m | 0 |
| WRDSW | Width dependence of RDSW | $\Omega\ \mu m\ m$ | 0 |
| WU0 | Width dependence of U0 | $m/(Vcm^2s)$ | 0 |
| WUA | Width dependence of UA | $m^2/V$ | 0 |

Table 2.77: BSIM3 Device Model Parameters

| Parameter | Description | Units | Default |
|---|---|---|---|
| WUA1 | Width dependence of UA1 | $m^2/V$ | 0 |
| WUB | Width dependence of UB | $m^3/V^2$ | 0 |
| WUB1 | Width dependence of UB1 | $m^3/V^2$ | 0 |
| WUC | Width dependence of UC | $m^2/V^2$ | 0 |
| WUC1 | Width dependence of UC1 | $m^2/(^\circ CV^2)$ | 0 |
| WUTE | Width dependence of UTE | m | 0 |
| WVBM | Width dependence of VBM | Vm | 0 |
| WVBX | Width dependence of VBX | Vm | 0 |
| WVFB | Width dependence of VFB | Vm | 0 |
| WVFBCV | Width dependence of VFBCV | Vm | 0 |
| WVOFF | Width dependence of VOFF | Vm | 0 |
| WVOFFCV | Width dependence of VOFFCV | Vm | 0 |
| WVSAT | Width dependence of VSAT | $m^2/s$ | 0 |
| WVTH0 | Width dependence of VTH0 | Vm | 0 |
| WW0 | Width dependence of W0 | $m^2$ | 0 |
| WWR | Width dependence of WR | m | 0 |
| WXJ | Width dependence of XJ | $m^2$ | 0 |
| WXT | Width dependence of XT | $m^2$ | 0 |
| ***Doping Parameters*** | | | |
| MJ | Bulk p-n bottom grading coefficient | – | 0.5 |
| MJSW | Bulk p-n sidewall grading coefficient | – | 0.33 |
| NSUB | Substrate doping density | $cm^{-3}$ | 6e+16 |
| ***Flicker and Thermal Noise Parameters*** | | | |
| AF | Flicker noise exponent | – | 1 |
| EF | Flicker exponent | – | 1 |
| EM | Saturation field | V/m | 4.1e+07 |
| KF | Flicker noise coefficient | – | 0 |
| NOIA | Noise parameter a | – | 0 |
| NOIB | Noise parameter b | – | 0 |
| NOIC | Noise parameter c | – | 0 |
| ***Geometry Parameters*** | | | |
| L | Channel length | m | 5e-06 |
| LL | Coefficient of length dependence for length offset | $m^{LLN}$ | 0 |
| LLC | Coefficient of length dependence for CV channel length offset | $m^{LLN}$ | 0 |

Table 2.77: BSIM3 Device Model Parameters

| Parameter | Description | Units | Default |
|---|---|---|---|
| LLN | Power of length dependence for length offset | – | 0 |
| LW | Coefficient of width dependence for length offset | $m^{LWN}$ | 0 |
| LWC | Coefficient of width dependence for channel length offset | $m^{LWN}$ | 0 |
| LWL | Coefficient of length and width cross term for length offset | $m^{LLN+LWN}$ | 0 |
| LWLC | Coefficient of length and width dependence for CV channel length offset | $m^{LLN+LWN}$ | 0 |
| LWN | Power of width dependence for length offset | – | 0 |
| TOX | Gate oxide thickness | m | 1.5e-08 |
| W | Channel width | m | 5e-06 |
| WL | Coefficient of length dependence for width offset | $m^{WLN}$ | 0 |
| WLC | Coefficient of length dependence for CV channel width offset | $m^{WLN}$ | 0 |
| WLN | Power of length dependece of width offset | – | 0 |
| WW | Coefficient of width dependence for width offset | $m^{WWN}$ | 0 |
| WWC | Coefficient of width dependence for CV channel width offset | $m^{WWN}$ | 0 |
| WWL | Coefficient of length and width cross term for width offset | $m^{WLN+WWN}$ | 0 |
| WWLC | Coefficient of length and width dependence for CV channel width offset | $m^{WLN+WWN}$ | 0 |
| WWN | Power of width dependence of width offset | – | 0 |
| XJ | Junction depth | m | 1.5e-07 |
| ***NQS Parameters*** | | | |
| ELM | Elmore constant of the channel | – | 5 |
| ***Resistance Parameters*** | | | |
| RSH | Drain,source diffusion sheet resistance | Ω | 0 |
| ***Process Parameters*** | | | |
| GAMMA1 | Body effect coefficient near the surface | $V^{1/2}$ | 0 |
| GAMMA2 | Body effect coefficient in the bulk | $V^{1/2}$ | 0 |
| JS | Bulk p-n saturation current density | $A/m^2$ | 0.0001 |
| NCH | Channel doping concentration | $cm^{-3}$ | 1.7e+17 |
| TOXM | Gate oxide thickness used in extraction | m | 0 |
| U0 | Surface mobility | $1/(Vcm^2s)$ | 0 |
| VBX | Vbs at which the depetion region = XT | V | 0 |
| XT | Doping depth | m | 1.55e-07 |

Table 2.77: BSIM3 Device Model Parameters

| Parameter | Description | Units | Default |
|---|---|---|---|
| | ***Temperature Parameters*** | | |
| AT | Temperature coefficient for saturation velocity | m/s | 33000 |
| KT1 | Themperature coefficient for threshold voltage | V | -0.11 |
| KT1L | Channel length dependence of the temerature coefficient for the threshold voltage | Vm | 0 |
| KT2 | Body-bias coefficient fo the threshold voltage temperature effect | – | 0.022 |
| NJ | Emission coefficient of junction | – | 1 |
| PRT | Temerature coefficient for RDSW | $\Omega\ \mu$m | 0 |
| TCJ | Temperature coefficient of Cj | $K^{-1}$ | 0 |
| TCJSW | Temperature coefficient of Cswj | $K^{-1}$ | 0 |
| TCJSWG | Temperature coefficient of Cjswg | $K^{-1}$ | 0 |
| TNOM | Nominal device temperature | °C | Ambient Tempera-ture |
| TPB | Temperature coefficient of Pb | V/K | 0 |
| TPBSW | Temperature coefficient of Pbsw | V/K | 0 |
| TPBSWG | Temperature coefficient of Pbswg | V/K | 0 |
| UA1 | Temperature coefficient for UA | m/V | 4.31e-09 |
| UB1 | Temperature coefficient for UB | $m^2/V^2$ | -7.61e-18 |
| UC1 | Temperature coefficient for UC | m/(°$CV^2$) | 0 |
| UTE | Mobility temerature exponent | – | -1.5 |
| XTI | Junction current temperature exponent coefficient | – | 3 |
| | ***Voltage Parameters*** | | |
| PB | Bulk p-n bottom potential | V | 1 |

## Level 10 MOSFET Tables (BSIM SOI)

For complete documentation of the BSIMSOI model, see the users' manual for the BSIMSOI, available for download at `http://bsim.berkeley.edu/models/bsimsoi/`. **Xyce** implements Version 3.2 of the BSIMSOI, you will have to get the documentation from the FTP archive on the Berkeley site.

In addition to the parameters shown in table 2.78, the BSIM3SOI supports a vector parameter for the initial conditions. `IC1` through `IC5` may therefore be specified compactly as `IC=<ic1>,<ic2>,<ic3>,<ic4>,<ic5>`.

**NOTE: Many BSIM SOI parameters listed in tables 2.78 and 2.79 as having default values of zero are actually replaced with internally computed defaults if not given. Specifying zero in your model card will override this internal computation. It is recommended that you only set model parameters that you are actually changing from defaults and that you not generate model cards containing default values from the tables.**

Table 2.78: BSIM3 SOI Device Instance Parameters

| Parameter | Description | Units | Default |
|---|---|---|---|
| BJTOFF | BJT on/off flag | logical (T/F) | 0 |
| DEBUG | BJT on/off flag | logical (T/F) | 0 |
| TNODEOUT | Flag indicating external temp node | logical (T/F) | 0 |
| VLDEBUG | | logical (T/F) | false |
| | ***Control Parameters*** | | |
| M | Multiplier for M devices connected in parallel | – | 1 |
| SOIMOD | SIO model selector,SOIMOD=0: BSIMPD,SOIMOD=1: undefined model for PD and FE,SOIMOD=2: ideal FD | – | 0 |
| | ***DC Parameters*** | | |
| VBSUSR | Vbs specified by user | V | 0 |
| | ***Geometry Parameters*** | | |
| AD | Drain diffusion area | $m^2$ | 0 |
| AEBCP | Substrate to body overlap area for bc prasitics | $m^2$ | 0 |
| AGBCP | Gate to body overlap area for bc parasitics | $m^2$ | 0 |
| AS | Source diffusion area | $m^2$ | 0 |
| FRBODY | Layout dependent body-resistance coefficient | – | 1 |
| L | Channel length | m | 5e-06 |
| NBC | Number of body contact isolation edge | – | 0 |
| NRB | Number of squares in body | – | 1 |

Table 2.78: BSIM3 SOI Device Instance Parameters

| Parameter | Description | Units | Default |
|---|---|---|---|
| NRD | Multiplier for RSH to yield parasitic resistance of drain | □ | 1 |
| NRS | Multiplier for RSH to yield parasitic resistance of source | □ | 1 |
| NSEG | Number segments for width partitioning | – | 1 |
| PD | Drain diffusion perimeter | m | 0 |
| PDBCP | Perimeter length for bc parasitics at drain side | m | 0 |
| PS | Source diffusion perimeter | m | 0 |
| PSBCP | Perimeter length for bc parasitics at source side | m | 0 |
| W | Channel width | m | 5e-06 |
| | ***RF Parameters*** | | |
| RGATEMOD | Gate resistance model selector | – | 0 |
| | ***Temperature Parameters*** | | |
| CTH0 | Thermal capacitance | F | 0 |
| RTH0 | normalized thermal resistance | Ω | 0 |
| TEMP | Device temperature | °C | 27 |
| | ***Voltage Parameters*** | | |
| IC1 | Initial condition on Vds | V | 0 |
| IC2 | Initial condition on Vgs | V | 0 |
| IC3 | Initial condition on Vbs | V | 0 |
| IC4 | Initial condition on Ves | V | 0 |
| IC5 | Initial condition on Vps | V | 0 |
| OFF | Initial condition of no voltage drops accross device | logical (T/F) | false |

Table 2.79: BSIM3 SOI Device Model Parameters

| Parameter | Description | Units | Default |
|---|---|---|---|
| DELTAVOX | The smoothing parameter in the Vox smoothing function | – | 0 |
| DTOXCV | Delta oxide thickness in meters in CapMod3 | m | 0 |
| FNOIMOD | Flicker noise model selector | – | 1 |
| IGBMOD | Flicker noise model selector | – | 0 |
| IGCMOD | Gate-channel tunneling current model selector | – | 0 |
| KB1 | Scaling factor for backgate charge | – | 1 |
| NOIF | Floating body excess noise ideality factor | – | 1 |

Table 2.79: BSIM3 SOI Device Model Parameters

| Parameter | Description | Units | Default |
|---|---|---|---|
| NTNOI | Thermal noise parameter | – | 1 |
| POXEDGE | Factor for the gate edge Tox | – | 1 |
| RNOIA | Thermal noise coefficient | – | 0.577 |
| RNOIB | Thermal noise coefficient | – | 0.37 |
| RSHG | Gate sheet resistance | – | 0.1 |
| TNOIA | Thermal noise parameter | – | 1.5 |
| TNOIB | Thermal noise parameter | – | 3.5 |
| TNOIMOD | Thermal noise model selector | – | 0 |
| VBS0FD | Lower bound of built-in potential lowering for FD operation | V | 0.5 |
| VBS0PD | Upper bound of built-in potential lowering for FD operation | – | 0 |
| VOXH | The limit of Vox in gate current calculation | – | 0 |
| VTH0 | Threshold voltage | – | 0 |
| ***Bin Parameters*** | | | |
| LMAX | Maximum channel length | m | 1 |
| LMIN | Minimum channel length | m | 0 |
| WMAX | Maximum channel width | m | 1 |
| WMIN | Minimum channel width | m | 0 |
| ***Capacitance Parameters*** | | | |
| ACDE | Exponetial coefficient for charge thickness in capmod = 3 for accumulation and depletion regions | m/V | 1 |
| ASD | Sorce/Drain bottom diffusion smoothing parameter | – | 0.3 |
| CF | Firing field capacitance | F/m | 0 |
| CGDL | Light-doped drain-gate region overlap capacitance | F/m | 0 |
| CGDO | Non-LLD region drain-gate overlap capacitance per unit channel length | F/m | 0 |
| CGEO | Gate substrate overlap capacitance per unit channel length | F/m | 0 |
| CGSL | Light-doped source-gate region overlap capacitance | F/m | 0 |
| CGSO | Non-LLD region source-gate overlap capacitance per unit channel length | F/m | 0 |
| CJSWG | Source/grain gate sidewall junction capacitance per unit width | F/m | 1e-10 |

Table 2.79: BSIM3 SOI Device Model Parameters

| Parameter | Description | Units | Default |
|---|---|---|---|
| CKAPPA | Coefficient for lightly doped region overlap capacitance fireing field capacitance | F/m | 0.6 |
| CLC | Constant term for short-channel model | m | 1e-08 |
| CLE | Exponetial term for the short-channel model | – | 0 |
| CSDESW | Sorce/Drain sidewall fringing capacitance per unit length | F/m | 0 |
| CSDMIN | Sorce/Drain bottom diffusion minimum capacitance | V | 0 |
| DELVT | Threshold voltage adjust for C-V | V | 0 |
| DLBG | Length offset fitting parameter for backgate charge | m | 0 |
| DLC | Length offset fitting parameter from C-V | m | 0 |
| DLCB | Length offset fitting parameter for body charge | m | 0 |
| DWC | Width offset fitting parameter from C-V | m | 0 |
| FBODY | Scaling factor for body charge | – | 1 |
| LDIFO | Channel length dependency coefficient of diffusion capacitance | – | 1 |
| MJSWG | Source/grain gate sidewall junction capacitance grading coeficient | – | 0.5 |
| MOIN | Coefficient for the gate-bias dependent surface potential | – | 15 |
| NDIF | Power coefficient of channel length dependency for diffusion capacitance | – | -1 |
| NOFF | CV parameter in Vgsteff,CV for weak to strong inversion | – | 1 |
| PBSWG | Source/drain gate sidewall junction built-in potential | V | 0.7 |
| TT | Diffusion capacitance transit time coefficient | s | 1e-12 |
| VSDFB | Sorce/Drain bottom diffusion capacitance flatband voltage | V | 0 |
| VSDTH | Sorce/Drain bottom diffusion capacitance threshold voltage | V | 0 |
| XPART | Charge partitioning rate flag | – | 0 |
| | ***Control Parameters*** | | |
| BINUNIT | Binning unit selector | – | 1 |
| CAPMOD | Flag for capacitance models | – | 2 |
| MOBMOD | Mobility model selector | – | 1 |
| PARAMCHK | Parameter value check | – | 0 |

Table 2.79: BSIM3 SOI Device Model Parameters

| Parameter | Description | Units | Default |
|---|---|---|---|
| SHMOD | Flag for self-heating,0-no self-heating,1-self-heating | – | 0 |
| TEMPMODEL | Specifies the type of parameter interpolation over temperature | – | 'NONE' |
| VERSION | Version number | – | '3.2' |
| | ***Current Parameters*** | | |
| AIGC | Parameter for Igc | $(F/g)^{1/2}s/mV$ | 0 |
| AIGSD | Parameter for Igs,d | $(F/g)^{1/2}s/mV$ | 0 |
| BIGC | Parameter for Igc | $(F/g)^{1/2}s/mV$ | 0 |
| BIGSD | Parameter for Igs,d | $(F/g)^{1/2}s/mV$ | 0 |
| CIGC | Parameter for Igc | $V^{-1}$ | 0 |
| CIGSD | Parameter for Igs,d | $V^{-1}$ | 0 |
| DLCIG | Delta L for Ig model | $V^{-1}$ | 0 |
| NIGC | Parameter for Igc slope | – | 1 |
| PIGCD | Parameter for Igc partition | – | 1 |
| | ***DC Parameters*** | | |
| A0 | Bulk charge effect coefficient for channel length | – | 1 |
| A1 | First non-saturation effect parameter | $V^{-1}$ | 0 |
| A2 | Second non-saturation factor | – | 1 |
| AELY | Channel length dependency of early voltage for bipolar current | V/m | 0 |
| AGIDL | GIDL constant | $\Omega^{-1}$ | 0 |
| AGS | Gate-bias coefficient of abulk | $V^{-1}$ | 0 |
| AHLI | High level injection parameter for bipolar current | – | 0 |
| ALPHA0 | First parameter of impact-ionization current | m/V | 0 |
| B0 | Bulk charge effect coefficient for channel width | m | 0 |
| B1 | Bulk charge effect offset | m | 0 |
| BETA0 | Second parameter of impact-ionization current | V | 0 |
| BETA1 | Second Vds dependent parameter of impact ionizatin current | – | 0 |
| BETA2 | Third Vds dependent parameter of impact ionizatin current | V | 0.1 |
| BGIDL | GIDL exponential coefficient | V/m | 0 |
| CDSC | Drain/source to channel coupling capacitance | $F/m^2$ | 0.00024 |
| CDSCB | Body-bias sensitivity of CDSC | $F/(Vm^2)$ | 0 |
| CDSCD | Drain-bias sensitivity of CDSC | $F/(Vm^2)$ | 0 |

Table 2.79: BSIM3 SOI Device Model Parameters

| Parameter | Description | Units | Default |
|---|---|---|---|
| CIT | Interface trap capacitance | $F/m^2$ | 0 |
| DELTA | Effective Vds parameter | V | 0.01 |
| DROUT | L-depedance Coefficient of the DIBL correction parameter in Rout | – | 0.56 |
| DSUB | DIBL coefficient exponent in subthreshhold region | – | 0 |
| DVT0 | First coefficient of short-channel effect effect on threshold voltage | – | 2.2 |
| DVT0W | First coefficient of narrow-width effect effect on threshold voltage for small channel length | $m^{-1}$ | 0 |
| DVT1 | Second coefficient of short-channel effect effect on threshold voltage | – | 0.53 |
| DVT1W | Second coefficient of narrow-width effect effect on threshold voltage for small channel length | $m^{-1}$ | 5.3e+06 |
| DVT2 | Body-bias coefficient of short-channel effect effect on threshold voltage | $V^{-1}$ | -0.032 |
| DVT2W | Body-bias coefficient of narrow-width effect effect on threshold voltage for small channel length | $V^{-1}$ | -0.032 |
| DWB | Coefficient of substrate body bias dependence of Weff | $m/V^{1/2}$ | 0 |
| DWBC | Width offset for body contact isolation edge | m | 0 |
| DWG | Coefficient of gate depedence of Weff | $m/V^{1/2}$ | 0 |
| ESATII | Saturation channel electric field for impact ionization current | V/m | 1e+07 |
| ETA0 | DIBL coefficient in subthreshold region | – | 0.08 |
| ETAB | Body-bias coefficient for the subthreshold DIBL effect | $V^{-1}$ | -0.07 |
| FBJTII | Fraction of bipolar current affecting the impact ionization | – | 0 |
| ISBJT | BJT injection saturation current | $A/m^2$ | 1e-06 |
| ISDIF | BOdy to source/drain injection saturation current | $A/m^2$ | 0 |
| ISREC | Recombinatin in depletion saturation current | $A/m^2$ | 1e-05 |
| ISTUN | Reverse tunneling saturation current | $A/m^2$ | 0 |
| K1 | First-order body effect coefficient | $V^{1/2}$ | 0 |
| K1W1 | First body effect width depenent parameter | m | 0 |
| K1W2 | Second body effect width depenent parameter | m | 0 |
| K2 | second-order body effect coefficient | – | 0 |
| K3 | Narrow width coefficient | – | 0 |
| K3B | Body effect coefficient of K3 | $V^{-1}$ | 0 |

Table 2.79: BSIM3 SOI Device Model Parameters

| Parameter | Description | Units | Default |
|---|---|---|---|
| KETA | Body-bias coefficient of bulk charge effect | $V^{-1}$ | -0.6 |
| KETAS | Surface potential adjustment for bulk charge effect | V | 0 |
| LBJT0 | Reference channel length for bipolar current | m | 2e-07 |
| LII | Channel length dependent parameter at threshold for impact ionization current | – | 0 |
| LINT | Length of offset fiting parameter from I-V without bias | m | 0 |
| LN | Electron/hole diffusion length | m | 2e-06 |
| NBJT | Power coefficient of channel length | – | 1 |
| NDIODE | Diode non-ideality factor | – | 1 |
| NFACTOR | Subthreshold swing factor | – | 1 |
| NGATE | Poly gate doping concentration | $cm^{-3}$ | 0 |
| NGIDL | GIDL Vds enhancement coefficient | V | 1.2 |
| NLX | Lateral non-uniform doping parameter | m | 1.74e-07 |
| NRECF0 | Recombination non-ideality factor at foward bias | – | 2 |
| NRECR0 | Recombination non-ideality factor at reverse bias | – | 10 |
| NTUN | Reverse tunneling non-ideality factor | – | 10 |
| PCLM | Channel length modulation parameter | – | 1.3 |
| PDIBLC1 | First output resistance DIBL effect correction parameter | – | 0.39 |
| PDIBLC2 | Second output resistance DIBL effect correction parameter | – | 0.0086 |
| PDIBLCB | Body effect coefficient of DIBL correction parameter | $V^{-1}$ | 0 |
| PRWB | Body effect coefficient of RDSW | $V^{-1/2}$ | 0 |
| PRWG | Gate-bias effect coefficient of RDSW | $V^{-1}$ | 0 |
| PVAG | Gate dependence of early voltage | – | 0 |
| RBODY | Intrinsic body contact sheet resistance | $\Omega/\square$ | 0 |
| RBSH | Intrinsic body contact sheet resistance | $\Omega/\square$ | 0 |
| RDSW | Parasitic resistance per unit width | $\Omega\ \mu$m | 100 |
| RHALO | Body halo sheet resistance | $\Omega$/m | 1e+15 |
| SII0 | First Vgs dependent parameter of impact ionizatin current | $V^{-1}$ | 0.5 |
| SII1 | Second Vgs dependent parameter of impact ionizatin current | $V^{-1}$ | 0.1 |
| SII2 | Third Vgs dependent parameter of impact ionizatin current | – | 0 |

Table 2.79: BSIM3 SOI Device Model Parameters

| Parameter | Description | Units | Default |
|---|---|---|---|
| SIID | Vds dependent parameter of drain saturation voltage for impact ionizatin current | $V^{-1}$ | 0 |
| TII | Temperature dependent parameter for impact ionization current | – | 0 |
| UA | First-order mobility degradation coefficient | m/V | 2.25e-09 |
| UB | First-order mobility degradation coefficient | $m^2/V^2$ | 5.87e-19 |
| UC | Body effect of mobility degridation coefficient | $m/V^2$ | 0 |
| VABJT | Early voltage for bipolar current | V | 10 |
| VBM | Maximum applied body-bias in threshold voltage calculation | V | -3 |
| VDSATII0 | Normal drain saturatio voltage at threshold for impact ionization current | V | 0.9 |
| VOFF | Offset voltage in the subthreshold region at large W and L | V | -0.08 |
| VREC0 | Voltage dependent parameter for recombination current | V | 0 |
| VSAT | Saturation velocity at temp = TNOM | m/s | 80000 |
| VTH0 | Threshold voltage at Vbs = 0 for large L | V | 0 |
| VTUN0 | Voltage dependent parameter for tunneling current | V | 0 |
| W0 | Narrow-width paameter | m | 2.5e-06 |
| WINT | Width-offset fitting parameter from I-V without bias | m | 0 |
| WR | Width offset from Weff for Rds Calculation | – | 1 |
| ***Dependency Parameters*** | | | |
| LA0 | Length dependence of A0 | m | 0 |
| LA1 | Length dependence of A1 | m/V | 0 |
| LA2 | Length dependence of A2 | m | 0 |
| LACDE | Length dependence of ACDE | $m^2/V$ | 0 |
| LAELY | Length dependence of AELY | V | 0 |
| LAGIDL | Length dependence of AGIDL | m/Ω | 0 |
| LAGS | Length dependence of AGS | m/V | 0 |
| LAHLI | Length dependence of AHLI | m | 0 |
| LAIGC | Length dependence of AIGC | $(F/g)^{1/2}sm/mV$ | 0 |
| LAIGSD | Length dependence of AIGSD | $(F/g)^{1/2}sm/mV$ | 0 |
| LALPHA0 | Length dependence of ALPHA0 | $m^2/V$ | 0 |
| LALPHAGB1 | Length dependence of ALPHAGB1 | m/V | 0 |

Table 2.79: BSIM3 SOI Device Model Parameters

| Parameter | Description | Units | Default |
|---|---|---|---|
| LALPHAGB2 | Length dependence of ALPHAGB2 | m/V | 0 |
| LAT | Length dependence of AT | $m^2/s$ | 0 |
| LB0 | Length dependence of B0 | $m^2$ | 0 |
| LB1 | Length dependence of B1 | $m^2$ | 0 |
| LBETA0 | Length dependence of BETA0 | Vm | 0 |
| LBETA1 | Length dependence of BETA1 | m | 0 |
| LBETA2 | Length dependence of BETA2 | Vm | 0 |
| LBETAGB1 | Length dependence of BETAGB1 | $m/V^2$ | 0 |
| LBETAGB2 | Length dependence of BETAGB2 | $m/V^2$ | 0 |
| LBGIDL | Length dependence of BGIDL | V | 0 |
| LBIGC | Length dependence of BIGC | $(F/g)^{1/2}sm/mV$ | 0 |
| LBIGSD | Length dependence of BIGSD | $(F/g)^{1/2}sm/mV$ | 0 |
| LCDSC | Length dependence of CDSC | F/m | 0 |
| LCDSCB | Length dependence of CDSCB | F/(Vm) | 0 |
| LCDSCD | Length dependence of CDSCD | F/(Vm) | 0 |
| LCGDL | Length dependence of CGDL | F | 0 |
| LCGSL | Length dependence of CGSL | F | 0 |
| LCIGC | Length dependence of CIGC | m/V | 0 |
| LCIGSD | Length dependence of CIGSD | m/V | 0 |
| LCIT | Length dependence of CIT | F/m | 0 |
| LCKAPPA | Length dependence of CKAPPA | F | 0 |
| LDELTA | Length dependence of DELTA | Vm | 0 |
| LDELVT | Length dependence of DELVT | Vm | 0 |
| LDROUT | Length dependence of DROUT | m | 0 |
| LDSUB | Length dependence of DSUB | m | 0 |
| LDVT0 | Length dependence of DVT0 | m | 0 |
| LDVT0W | Length dependence of DVT0W | – | 0 |
| LDVT1 | Length dependence of DVT1 | m | 0 |
| LDVT1W | Length dependence of DVT1W | – | 0 |
| LDVT2 | Length dependence of DVT2 | m/V | 0 |
| LDVT2W | Length dependence of DVT2W | m/V | 0 |
| LDWB | Length dependence of DWB | $m^2/V^{1/2}$ | 0 |
| LDWG | Length dependence of DWG | $m^2/V^{1/2}$ | 0 |
| LESATII | Length dependence of ESATII | V | 0 |
| LETA0 | Length dependence of ETA0 | m | 0 |

Table 2.79: BSIM3 SOI Device Model Parameters

| Parameter | Description | Units | Default |
|---|---|---|---|
| LETAB | Length dependence of ETAB | m/V | 0 |
| LFBJTII | Length dependence of FBJTII | m | 0 |
| LISBJT | Length dependence of ISBJT | A/m | 0 |
| LISDIF | Length dependence of ISDIF | A/m | 0 |
| LISREC | Length dependence of ISREC | A/m | 0 |
| LISTUN | Length dependence of ISTUN | A/m | 0 |
| LK1 | Length dependence of K1 | $V^{1/2}m$ | 0 |
| LK1W1 | Length dependence of K1W1 | $m^2$ | 0 |
| LK1W2 | Length dependence of K1W2 | $m^2$ | 0 |
| LK2 | Length dependence of K2 | m | 0 |
| LK3 | Length dependence of K3 | m | 0 |
| LK3B | Length dependence of K3B | m/V | 0 |
| LKB1 | Length dependence of KB1 | m | 0 |
| LKETA | Length dependence of KETA | m/V | 0 |
| LKETAS | Length dependence of KETAS | Vm | 0 |
| LKT1 | Length dependence of KT1 | Vm | 0 |
| LKT1L | Length dependence of KT1L | $Vm^2$ | 0 |
| LKT2 | Length dependence of KT2 | m | 0 |
| LLBJT0 | Length dependence of LBJT0 | $m^2$ | 0 |
| LLII | Length dependence of LII | m | 0 |
| LMOIN | Length dependence of MOIN | m | 0 |
| LNBJT | Length dependence of NBJT | m | 0 |
| LNCH | Length dependence of NCH | $m/cm^3$ | 0 |
| LNDIF | Length dependence of NDIF | m | 0 |
| LNDIODE | Length dependence of NDIODE | m | 0 |
| LNFACTOR | Length dependence of NFACTOR | m | 0 |
| LNGATE | Length dependence of NGATE | $m/cm^3$ | 0 |
| LNGIDL | Length dependence of NGIDL | Vm | 0 |
| LNIGC | Length dependence of NIGC | m | 0 |
| LNLX | Length dependence of NLX | $m^2$ | 0 |
| LNOFF | Length dependence of NOFF | m | 0 |
| LNRECF0 | Length dependence of NRECF0 | m | 0 |
| LNRECR0 | Length dependence of NRECR0 | m | 0 |
| LNSUB | Length dependence of NSUB | $m/cm^3$ | 0 |
| LNTRECF | Length dependence of NTRECF | m | 0 |

Table 2.79: BSIM3 SOI Device Model Parameters

| Parameter | Description | Units | Default |
|---|---|---|---|
| LNTRECR | Length dependence of NTRECR | m | 0 |
| LNTUN | Length dependence of NTUN | m | 0 |
| LPCLM | Length dependence of PCLM | m | 0 |
| LPDIBLC1 | Length dependence of PDIBLC1 | m | 0 |
| LPDIBLC2 | Length dependence of PDIBLC2 | m | 0 |
| LPDIBLCB | Length dependence of PDIBLCB | m/V | 0 |
| LPIGCD | Length dependence of PIGCD | m | 0 |
| LPOXEDGE | Length dependence of POXEDGE | m | 0 |
| LPRT | Length dependence of PRT | $\Omega$ $\mu$m m | 0 |
| LPRWB | Length dependence of PRWB | m/V$^{1/2}$ | 0 |
| LPRWG | Length dependence of PRWG | m/V | 0 |
| LPVAG | Length dependence of PVAG | m | 0 |
| LRDSW | Length dependence of RDSW | $\Omega$ $\mu$m m | 0 |
| LSII0 | Length dependence of SII0 | m/V | 0 |
| LSII1 | Length dependence of SII1 | m/V | 0 |
| LSII2 | Length dependence of SII2 | m | 0 |
| LSIID | Length dependence of SIID | m/V | 0 |
| LU0 | Length dependence of U0 | m/(Vcm$^2$s) | 0 |
| LUA | Length dependence of UA | m$^2$/V | 0 |
| LUA1 | Length dependence of UA1 | m$^2$/V | 0 |
| LUB | Length dependence of UB | m$^3$/V$^2$ | 0 |
| LUB1 | Length dependence of UB1 | m$^3$/V$^2$ | 0 |
| LUC | Length dependence of UC | m$^2$/V$^2$ | 0 |
| LUC1 | Length dependence of UC1 | m$^2$/($^\circ$CV$^2$) | 0 |
| LUTE | Length dependence of UTE | m | 0 |
| LVABJT | Length dependence of VABJT | Vm | 0 |
| LVDSATII0 | Length dependence of VDSATII0 | Vm | 0 |
| LVOFF | Length dependence of VOFF | Vm | 0 |
| LVREC0 | Length dependence of VREC0 | Vm | 0 |
| LVSAT | Length dependence of VSAT | m$^2$/s | 0 |
| LVSDFB | Length dependence of VSDFB | Vm | 0 |
| LVSDTH | Length dependence of VSDTH | Vm | 0 |
| LVTH0 | Length dependence of VTH0 | Vm | 0 |
| LVTUN0 | Length dependence of VTUN0 | Vm | 0 |
| LW0 | Length dependence of W0 | m$^2$ | 0 |

Table 2.79: BSIM3 SOI Device Model Parameters

| Parameter | Description | Units | Default |
|---|---|---|---|
| LWR | Length dependence of WR | m | 0 |
| LXBJT | Length dependence of XBJT | m | 0 |
| LXDIF | Length dependence of XDIF | m | 0 |
| LXJ | Length dependence of XJ | $m^2$ | 0 |
| LXRCRG1 | Length dependence of XRCRG1 | m | 0 |
| LXRCRG2 | Length dependence of XRCRG2 | m | 0 |
| LXREC | Length dependence of XREC | m | 0 |
| LXTUN | Length dependence of XTUN | m | 0 |
| PA0 | Cross-term dependence of A0 | m | 0 |
| PA1 | Cross-term dependence of A1 | m/V | 0 |
| PA2 | Cross-term dependence of A2 | m | 0 |
| PACDE | Cross-term dependence of ACDE | $m^2$/V | 0 |
| PAELY | Cross-term dependence of AELY | V | 0 |
| PAGIDL | Cross-term dependence of AGIDL | m/Ω | 0 |
| PAGS | Cross-term dependence of AGS | m/V | 0 |
| PAHLI | Cross-term dependence of AHLI | m | 0 |
| PAIGC | Cross-term dependence of AIGC | $(F/g)^{1/2}$sm/V | 0 |
| PAIGSD | Cross-term dependence of AIGSD | $(F/g)^{1/2}$sm/V | 0 |
| PALPHA0 | Cross-term dependence of ALPHA0 | $m^2$/V | 0 |
| PALPHAGB1 | Cross-term dependence of ALPHAGB1 | m/V | 0 |
| PALPHAGB2 | Cross-term dependence of ALPHAGB2 | m/V | 0 |
| PAT | Cross-term dependence of AT | $m^2$/s | 0 |
| PB0 | Cross-term dependence of B0 | $m^2$ | 0 |
| PB1 | Cross-term dependence of B1 | $m^2$ | 0 |
| PBETA0 | Cross-term dependence of BETA0 | Vm | 0 |
| PBETA1 | Cross-term dependence of BETA1 | m | 0 |
| PBETA2 | Cross-term dependence of BETA2 | Vm | 0 |
| PBETAGB1 | Cross-term dependence of BETAGB1 | m/$V^2$ | 0 |
| PBETAGB2 | Cross-term dependence of BETAGB2 | m/$V^2$ | 0 |
| PBGIDL | Cross-term dependence of BGIDL | V | 0 |
| PBIGC | Cross-term dependence of BIGC | $(F/g)^{1/2}$sm/V | 0 |
| PBIGSD | Cross-term dependence of BIGSD | $(F/g)^{1/2}$sm/V | 0 |
| PCDSC | Cross-term dependence of CDSC | F/m | 0 |
| PCDSCB | Cross-term dependence of CDSCB | F/(Vm) | 0 |
| PCDSCD | Cross-term dependence of CDSCD | F/(Vm) | 0 |

Table 2.79: BSIM3 SOI Device Model Parameters

| Parameter | Description | Units | Default |
|---|---|---|---|
| PCGDL | Cross-term dependence of CGDL | F | 0 |
| PCGSL | Cross-term dependence of CGSL | F | 0 |
| PCIGC | Cross-term dependence of CIGC | m/V | 0 |
| PCIGSD | Cross-term dependence of CIGSD | m/V | 0 |
| PCIT | Cross-term dependence of CIT | F/m | 0 |
| PCKAPPA | Cross-term dependence of CKAPPA | F | 0 |
| PDELTA | Cross-term dependence of DELTA | Vm | 0 |
| PDELVT | Cross-term dependence of DELVT | Vm | 0 |
| PDROUT | Cross-term dependence of DROUT | m | 0 |
| PDSUB | Cross-term dependence of DSUB | m | 0 |
| PDVT0 | Cross-term dependence of DVT0 | m | 0 |
| PDVT0W | Cross-term dependence of DVT0W | – | 0 |
| PDVT1 | Cross-term dependence of DVT1 | m | 0 |
| PDVT1W | Cross-term dependence of DVT1W | – | 0 |
| PDVT2 | Cross-term dependence of DVT2 | m/V | 0 |
| PDVT2W | Cross-term dependence of DVT2W | m/V | 0 |
| PDWB | Cross-term dependence of DWB | $m^2/V^{1/2}$ | 0 |
| PDWG | Cross-term dependence of DWG | $m^2/V^{1/2}$ | 0 |
| PESATII | Cross-term dependence of ESATII | V | 0 |
| PETA0 | Cross-term dependence of ETA0 | m | 0 |
| PETAB | Cross-term dependence of ETAB | m/V | 0 |
| PFBJTII | Cross-term dependence of FBJTII | m | 0 |
| PISBJT | Cross-term dependence of ISBJT | A/m | 0 |
| PISDIF | Cross-term dependence of ISDIF | A/m | 0 |
| PISREC | Cross-term dependence of ISREC | A/m | 0 |
| PISTUN | Cross-term dependence of ISTUN | A/m | 0 |
| PK1 | Cross-term dependence of K1 | $V^{1/2}m$ | 0 |
| PK1W1 | Cross-term dependence of K1W1 | $m^2$ | 0 |
| PK1W2 | Cross-term dependence of K1W2 | $m^2$ | 0 |
| PK2 | Cross-term dependence of K2 | m | 0 |
| PK3 | Cross-term dependence of K3 | m | 0 |
| PK3B | Cross-term dependence of K3B | m/V | 0 |
| PKB1 | Cross-term dependence of KB1 | m | 0 |
| PKETA | Cross-term dependence of KETA | m/V | 0 |
| PKETAS | Cross-term dependence of KETAS | Vm | 0 |

Table 2.79: BSIM3 SOI Device Model Parameters

| Parameter | Description | Units | Default |
|---|---|---|---|
| PKT1 | Cross-term dependence of KT1 | Vm | 0 |
| PKT1L | Cross-term dependence of KT1L | $Vm^2$ | 0 |
| PKT2 | Cross-term dependence of KT2 | m | 0 |
| PLBJT0 | Cross-term dependence of LBJT0 | $m^2$ | 0 |
| PLII | Cross-term dependence of LII | m | 0 |
| PMOIN | Cross-term dependence of MOIN | m | 0 |
| PNBJT | Cross-term dependence of NBJT | m | 0 |
| PNCH | Cross-term dependence of NCH | $m/cm^3$ | 0 |
| PNDIF | Cross-term dependence of NDIF | m | 0 |
| PNDIODE | Cross-term dependence of NDIODE | m | 0 |
| PNFACTOR | Cross-term dependence of NFACTOR | m | 0 |
| PNGATE | Cross-term dependence of NGATE | $m/cm^3$ | 0 |
| PNGIDL | Cross-term dependence of NGIDL | Vm | 0 |
| PNIGC | Cross-term dependence of NIGC | m | 0 |
| PNLX | Cross-term dependence of NLX | $m^2$ | 0 |
| PNOFF | Cross-term dependence of NOFF | m | 0 |
| PNRECF0 | Cross-term dependence of NRECF0 | m | 0 |
| PNRECR0 | Cross-term dependence of NRECR0 | m | 0 |
| PNSUB | Cross-term dependence of NSUB | $m/cm^3$ | 0 |
| PNTRECF | Cross-term dependence of NTRECF | m | 0 |
| PNTRECR | Cross-term dependence of NTRECR | m | 0 |
| PNTUN | Cross-term dependence of NTUN | m | 0 |
| PPCLM | Cross-term dependence of PCLM | m | 0 |
| PPDIBLC1 | Cross-term dependence of PDIBLC1 | m | 0 |
| PPDIBLC2 | Cross-term dependence of PDIBLC2 | m | 0 |
| PPDIBLCB | Cross-term dependence of PDIBLCB | m/V | 0 |
| PPIGCD | Cross-term dependence of PIGCD | m | 0 |
| PPOXEDGE | Cross-term dependence of POXEDGE | m | 0 |
| PPRT | Cross-term dependence of PRT | $\Omega\ \mu m$ m | 0 |
| PPRWB | Cross-term dependence of PRWB | $m/V^{1/2}$ | 0 |
| PPRWG | Cross-term dependence of PRWG | m/V | 0 |
| PPVAG | Cross-term dependence of PVAG | m | 0 |
| PRDSW | Cross-term dependence of RDSW | $\Omega\ \mu m$ m | 0 |
| PSII0 | Cross-term dependence of SII0 | m/V | 0 |
| PSII1 | Cross-term dependence of SII1 | m/V | 0 |

Table 2.79: BSIM3 SOI Device Model Parameters

| Parameter | Description | Units | Default |
|---|---|---|---|
| PSII2 | Cross-term dependence of SII2 | m | 0 |
| PSIID | Cross-term dependence of SIID | m/V | 0 |
| PU0 | Cross-term dependence of U0 | m/(Vcm$^2$s) | 0 |
| PUA | Cross-term dependence of UA | m$^2$/V | 0 |
| PUA1 | Cross-term dependence of UA1 | m$^2$/V | 0 |
| PUB | Cross-term dependence of UB | m$^3$/V$^2$ | 0 |
| PUB1 | Cross-term dependence of UB1 | m$^3$/V$^2$ | 0 |
| PUC | Cross-term dependence of UC | m$^2$/V$^2$ | 0 |
| PUC1 | Cross-term dependence of UC1 | m$^2$/($^\circ$CV$^2$) | 0 |
| PUTE | Cross-term dependence of UTE | m | 0 |
| PVABJT | Cross-term dependence of VABJT | Vm | 0 |
| PVDSATII0 | Cross-term dependence of VDSATII0 | Vm | 0 |
| PVOFF | Cross-term dependence of VOFF | Vm | 0 |
| PVREC0 | Cross-term dependence of VREC0 | Vm | 0 |
| PVSAT | Cross-term dependence of VSAT | m$^2$/s | 0 |
| PVSDFB | Cross-term dependence of VSDFB | Vm | 0 |
| PVSDTH | Cross-term dependence of VSDTH | Vm | 0 |
| PVTH0 | Cross-term dependence of VTH0 | Vm | 0 |
| PVTUN0 | Cross-term dependence of VTUN0 | Vm | 0 |
| PW0 | Cross-term dependence of W0 | m$^2$ | 0 |
| PWR | Cross-term dependence of WR | m | 0 |
| PXBJT | Cross-term dependence of XBJT | m | 0 |
| PXDIF | Cross-term dependence of XDIF | m | 0 |
| PXJ | Cross-term dependence of XJ | m$^2$ | 0 |
| PXRCRG1 | Cross-term dependence of XRCRG1 | m | 0 |
| PXRCRG2 | Cross-term dependence of XRCRG2 | m | 0 |
| PXREC | Cross-term dependence of XREC | m | 0 |
| PXTUN | Cross-term dependence of XTUN | m | 0 |
| WA0 | Width dependence of A0 | m | 0 |
| WA1 | Width dependence of A1 | m/V | 0 |
| WA2 | Width dependence of A2 | m | 0 |
| WACDE | Width dependence of ACDE | m$^2$/V | 0 |
| WAELY | Width dependence of AELY | V | 0 |
| WAGIDL | Width dependence of AGIDL | m/$\Omega$ | 0 |
| WAGS | Width dependence of AGS | m/V | 0 |

Table 2.79: BSIM3 SOI Device Model Parameters

| Parameter | Description | Units | Default |
|---|---|---|---|
| WAHLI | Width dependence of AHLI | m | 0 |
| WAIGC | Width dependence of AIGC | $(F/g)^{1/2}sm/mV$ | 0 |
| WAIGSD | Width dependence of AIGSD | $(F/g)^{1/2}sm/mV$ | 0 |
| WALPHA0 | Width dependence of ALPHA0 | $m^2/V$ | 0 |
| WALPHAGB1 | Width dependence of ALPHAGB1 | m/V | 0 |
| WALPHAGB2 | Width dependence of ALPHAGB2 | m/V | 0 |
| WAT | Width dependence of AT | $m^2/s$ | 0 |
| WB0 | Width dependence of B0 | $m^2$ | 0 |
| WB1 | Width dependence of B1 | $m^2$ | 0 |
| WBETA0 | Width dependence of BETA0 | Vm | 0 |
| WBETA1 | Width dependence of BETA1 | m | 0 |
| WBETA2 | Width dependence of BETA2 | Vm | 0 |
| WBETAGB1 | Width dependence of BETAGB1 | $m/V^2$ | 0 |
| WBETAGB2 | Width dependence of BETAGB2 | $m/V^2$ | 0 |
| WBGIDL | Width dependence of BGIDL | V | 0 |
| WBIGC | Width dependence of BIGC | $(F/g)^{1/2}sm/mV$ | 0 |
| WBIGSD | Width dependence of BIGSD | $(F/g)^{1/2}sm/mV$ | 0 |
| WCDSC | Width dependence of CDSC | F/m | 0 |
| WCDSCB | Width dependence of CDSCB | F/(Vm) | 0 |
| WCDSCD | Width dependence of CDSCD | F/(Vm) | 0 |
| WCGDL | Width dependence of CGDL | F | 0 |
| WCGSL | Width dependence of CGSL | F | 0 |
| WCIGC | Width dependence of CIGC | m/V | 0 |
| WCIGSD | Width dependence of CIGSD | m/V | 0 |
| WCIT | Width dependence of CIT | F/m | 0 |
| WCKAPPA | Width dependence of CKAPPA | F | 0 |
| WDELTA | Width dependence of DELTA | Vm | 0 |
| WDELVT | Width dependence of DELVT | Vm | 0 |
| WDROUT | Width dependence of DROUT | m | 0 |
| WDSUB | Width dependence of DSUB | m | 0 |
| WDVT0 | Width dependence of DVT0 | m | 0 |
| WDVT0W | Width dependence of DVT0W | – | 0 |
| WDVT1 | Width dependence of DVT1 | m | 0 |
| WDVT1W | Width dependence of DVT1W | – | 0 |
| WDVT2 | Width dependence of DVT2 | m/V | 0 |

Table 2.79: BSIM3 SOI Device Model Parameters

| Parameter | Description | Units | Default |
|---|---|---|---|
| WDVT2W | Width dependence of DVT2W | m/V | 0 |
| WDWB | Width dependence of DWB | $m^2/V^{1/2}$ | 0 |
| WDWG | Width dependence of DWG | $m^2/V^{1/2}$ | 0 |
| WESATII | Width dependence of ESATII | V | 0 |
| WETA0 | Width dependence of ETA0 | m | 0 |
| WETAB | Width dependence of ETAB | m/V | 0 |
| WFBJTII | Width dependence of FBJTII | m | 0 |
| WISBJT | Width dependence of ISBJT | A/m | 0 |
| WISDIF | Width dependence of ISDIF | A/m | 0 |
| WISREC | Width dependence of ISREC | A/m | 0 |
| WISTUN | Width dependence of ISTUN | A/m | 0 |
| WK1 | Width dependence of K1 | $V^{1/2}m$ | 0 |
| WK1W1 | Width dependence of K1W1 | $m^2$ | 0 |
| WK1W2 | Width dependence of K1W2 | $m^2$ | 0 |
| WK2 | Width dependence of K2 | m | 0 |
| WK3 | Width dependence of K3 | m | 0 |
| WK3B | Width dependence of K3B | m/V | 0 |
| WKB1 | Width dependence of KB1 | m | 0 |
| WKETA | Width dependence of KETA | m/V | 0 |
| WKETAS | Width dependence of KETAS | Vm | 0 |
| WKT1 | Width dependence of KT1 | Vm | 0 |
| WKT1L | Width dependence of KT1L | $Vm^2$ | 0 |
| WKT2 | Width dependence of KT2 | m | 0 |
| WLBJT0 | Width dependence of LBJT0 | $m^2$ | 0 |
| WLII | Width dependence of LII | m | 0 |
| WMOIN | Width dependence of MOIN | m | 0 |
| WNBJT | Width dependence of NBJT | m | 0 |
| WNCH | Width dependence of NCH | $m/cm^3$ | 0 |
| WNDIF | Width dependence of NDIF | m | 0 |
| WNDIODE | Width dependence of NDIODE | m | 0 |
| WNFACTOR | Width dependence of NFACTOR | m | 0 |
| WNGATE | Width dependence of NGATE | $m/cm^3$ | 0 |
| WNGIDL | Width dependence of NGIDL | Vm | 0 |
| WNIGC | Width dependence of NIGC | m | 0 |
| WNLX | Width dependence of NLX | $m^2$ | 0 |

Table 2.79: BSIM3 SOI Device Model Parameters

| Parameter | Description | Units | Default |
|---|---|---|---|
| WNOFF | Width dependence of NOFF | m | 0 |
| WNRECF0 | Width dependence of NRECF0 | m | 0 |
| WNRECR0 | Width dependence of NRECR0 | m | 0 |
| WNSUB | Width dependence of NSUB | m/cm$^3$ | 0 |
| WNTRECF | Width dependence of NTRECF | m | 0 |
| WNTRECR | Width dependence of NTRECR | m | 0 |
| WNTUN | Width dependence of NTUN | m | 0 |
| WPCLM | Width dependence of PCLM | m | 0 |
| WPDIBLC1 | Width dependence of PDIBLC1 | m | 0 |
| WPDIBLC2 | Width dependence of PDIBLC2 | m | 0 |
| WPDIBLCB | Width dependence of PDIBLCB | m/V | 0 |
| WPIGCD | Width dependence of PIGCD | m | 0 |
| WPOXEDGE | Width dependence of POXEDGE | m | 0 |
| WPRT | Width dependence of PRT | $\Omega$ $\mu$m m | 0 |
| WPRWB | Width dependence of PRWB | m/V$^{1/2}$ | 0 |
| WPRWG | Width dependence of PRWG | m/V | 0 |
| WPVAG | Width dependence of PVAG | m | 0 |
| WRDSW | Width dependence of RDSW | $\Omega$ $\mu$m m | 0 |
| WSII0 | Width dependence of SII0 | m/V | 0 |
| WSII1 | Width dependence of SII1 | m/V | 0 |
| WSII2 | Width dependence of SII2 | m | 0 |
| WSIID | Width dependence of SIID | m/V | 0 |
| WU0 | Width dependence of U0 | m/(Vcm$^2$s) | 0 |
| WUA | Width dependence of UA | m$^2$/V | 0 |
| WUA1 | Width dependence of UA1 | m$^2$/V | 0 |
| WUB | Width dependence of UB | m$^3$/V$^2$ | 0 |
| WUB1 | Width dependence of UB1 | m$^3$/V$^2$ | 0 |
| WUC | Width dependence of UC | m$^2$/V$^2$ | 0 |
| WUC1 | Width dependence of UC1 | m$^2$/($^\circ$CV$^2$) | 0 |
| WUTE | Width dependence of UTE | m | 0 |
| WVABJT | Width dependence of VABJT | Vm | 0 |
| WVDSATII0 | Width dependence of VDSATII0 | Vm | 0 |
| WVOFF | Width dependence of VOFF | Vm | 0 |
| WVREC0 | Width dependence of VREC0 | Vm | 0 |
| WVSAT | Width dependence of VSAT | m$^2$/s | 0 |

Table 2.79: BSIM3 SOI Device Model Parameters

| Parameter | Description | Units | Default |
|---|---|---|---|
| WVSDFB | Width dependence of VSDFB | Vm | 0 |
| WVSDTH | Width dependence of VSDTH | Vm | 0 |
| WVTH0 | Width dependence of VTH0 | Vm | 0 |
| WVTUN0 | Width dependence of VTUN0 | Vm | 0 |
| WW0 | Width dependence of W0 | $m^2$ | 0 |
| WWR | Width dependence of WR | m | 0 |
| WXBJT | Width dependence of XBJT | m | 0 |
| WXDIF | Width dependence of XDIF | m | 0 |
| WXJ | Width dependence of XJ | $m^2$ | 0 |
| WXRCRG1 | Width dependence of XRCRG1 | m | 0 |
| WXRCRG2 | Width dependence of XRCRG2 | m | 0 |
| WXREC | Width dependence of XREC | m | 0 |
| WXTUN | Width dependence of XTUN | m | 0 |
| ***Doping Parameters*** | | | |
| NSUB | Substrate doping density | $cm^{-3}$ | 6e+16 |
| ***Flicker and Thermal Noise Parameters*** | | | |
| AF | Flicker noise exponent | – | 1 |
| EF | Flicker exponent | – | 1 |
| EM | Saturation field | V/m | 4.1e+07 |
| KF | Flicker noise coefficient | – | 0 |
| NOIA | Noise parameter a | – | 0 |
| NOIB | Noise parameter b | – | 0 |
| NOIC | Noise parameter c | – | 8.75e+09 |
| ***Geometry Parameters*** | | | |
| L | Channel length | m | 5e-06 |
| LL | Coefficient of length dependence for length offset | $m^{LLN}$ | 0 |
| LLC | Coefficient of length dependence for CV channel length offset | $m^{LLN}$ | 0 |
| LLN | Power of length dependence for length offset | – | 1 |
| LW | Coefficient of width dependence for length offset | $m^{LWN}$ | 0 |
| LWC | Coefficient of width dependence for channel length offset | $m^{LWN}$ | 0 |
| LWL | Coefficient of length and width cross term for length offset | $m^{LLN+LWN}$ | 0 |
| LWLC | Coefficient of length and width dependence for CV channel length offset | $m^{LLN+LWN}$ | 0 |

Table 2.79: BSIM3 SOI Device Model Parameters

| Parameter | Description | Units | Default |
|---|---|---|---|
| LWN | Power of width dependence for length offset | – | 1 |
| TOX | Gate oxide thickness | m | 1e-08 |
| W | Channel width | m | 5e-06 |
| WL | Coefficient of length dependence for width offset | $m^{WLN}$ | 0 |
| WLC | Coefficient of length dependence for CV channel width offset | $m^{WLN}$ | 0 |
| WLN | Power of length dependece of width offset | – | 1 |
| WW | Coefficient of width dependence for width offset | $m^{WWN}$ | 0 |
| WWC | Coefficient of width dependence for CV channel width offset | $m^{WWN}$ | 0 |
| WWL | Coefficient of length and width cross term for width offset | $m^{WLN+WWN}$ | 0 |
| WWLC | Coefficient of length and width dependence for CV channel width offset | $m^{WLN+WWN}$ | 0 |
| WWN | Power of width dependence of width offset | – | 1 |
| XJ | Junction depth | m | 0 |
| ***Resistance Parameters*** | | | |
| RSH | Drain,source diffusion sheet resistance | Ω | 0 |
| ***Process Parameters*** | | | |
| GAMMA1 | Body effect coefficient near the surface | $V^{1/2}$ | 0 |
| GAMMA2 | Body effect coefficient in the bulk | $V^{1/2}$ | 0 |
| NCH | Channel doping concentration | $cm^{-3}$ | 1.7e+17 |
| TBOX | Buried oxide thickness | m | 3e-07 |
| TOXM | Gate oxide thickness used in extraction | m | 0 |
| TSI | Silicon film thickness | m | 1e-07 |
| U0 | Surface mobility | $1/(Vcm^2s)$ | 0 |
| VBX | Vbs at which the depetion region = XT | V | 0 |
| XT | Doping depth | m | 1.55e-07 |
| ***RF Parameters*** | | | |
| BUG1830FIX | Voltage limter fix for bug 1830 | – | 0 |
| NGCON | Number of gate contacts | – | 1 |
| RGATEMOD | Gate resistance model selector | – | 0 |
| XGL | Offset of the gate length due to variations in patterning | m | 0 |
| XGW | Distance from the gate contact to the channel edge | m | 0 |

Table 2.79: BSIM3 SOI Device Model Parameters

| Parameter | Description | Units | Default |
|---|---|---|---|
| XRCRG1 | Parameter for distributed channel resistance effect for intrinsic input resistance | – | 12 |
| XRCRG2 | Parameter to account for the excess channel diffusion resistance for intrinsic input resistance | – | 1 |
| | ***Temperature Parameters*** | | |
| AT | Temperature coefficient for saturation velocity | m/s | 33000 |
| CTH0 | Thermal capacitance per unit width | F/m | 1e-05 |
| KT1 | Themperature coefficient for threshold voltage | V | -0.11 |
| KT1L | Channel length dependence of the temerature coefficient for the threshold voltage | Vm | 0 |
| KT2 | Body-bias coefficient fo the threshold voltage temperature effect | – | 0.022 |
| NTRECF | Temperature coefficient for NRECF | – | 0 |
| NTRECR | Temperature coefficient for NRECR | – | 0 |
| PRT | Temerature coefficient for RDSW | $\Omega\ \mu$m | 0 |
| RTH0 | Thermal resistance per unit width | $\Omega/$m | 0 |
| TCJSWG | Temperature coefficient of Cjswg | $K^{-1}$ | 0 |
| TNOM | Nominal device temperature | °C | Ambient Tempera-ture |
| TPBSWG | Temperature coefficient of Pbswg | V/K | 0 |
| UA1 | Temperature coefficient for UA | m/V | 4.31e-09 |
| UB1 | Temperature coefficient for UB | $m^2/V^2$ | -7.61e-18 |
| UC1 | Temperature coefficient for UC | m/(°$CV^2$) | 0 |
| UTE | Mobility temerature exponent | – | -1.5 |
| WTH0 | Minimum width for thermal resistance calculation | m | 0 |
| XBJT | Power dependence of JBJT on temperature | – | 1 |
| XDIF | Power dependence of JDIF on temperature | – | 0 |
| XREC | Power dependence of JREC on temperature | – | 1 |
| XTUN | Power dependence of JTUN on temperature | – | 0 |
| | ***Tunnelling Parameters*** | | |
| ALPHAGB1 | First Vox dependent parameter for gate current in inversion | $V^{-1}$ | 0.35 |
| ALPHAGB2 | First Vox dependent parameter for gate current in accumulation | $V^{-1}$ | 0.43 |
| BETAGB1 | Second Vox dependent parameter for gate current in inversion | $V^{-2}$ | 0.03 |

Table 2.79: BSIM3 SOI Device Model Parameters

| Parameter | Description | Units | Default |
|---|---|---|---|
| BETAGB2 | First Vox dependent parameter for gate current in accumulation | $V^{-2}$ | 0.05 |
| EBG | Effective bandgap in gate current calculation | V | 1.2 |
| IGMOD | Gate current model selector | – | 0 |
| NTOX | Power term of gate current | – | 1 |
| TOXQM | Oxide thickness for Igb calculation | m | 0 |
| TOXREF | Target oxide thickness | m | 2.5e-09 |
| VECB | Vaux parameter for conduction band electron tunneling | – | 0.026 |
| VEVB | Vaux parameter for valence band electron tunneling | – | 0.075 |
| VGB1 | Third Vox dependent parameter for gate current in inversion | V | 300 |
| VGB2 | Third Vox dependent parameter for gate current in accumulation | V | 17 |
| ***Built-in Potential Lowering Parameters*** | | | |
| DK2B | Third backgate body effect parameter for short channel effect | – | 0 |
| DVBD0 | First short channel effect parameter in FD module | – | 0 |
| DVBD1 | Second short channel effect parameter in FD module | – | 0 |
| K1B | First backgate body effect parameter | – | 1 |
| K2B | Second backgate body effect parameter for short channel effect | – | 0 |
| MOINFD | Gate bias dependance coefficient of surface potential in FD module | – | 1000 |
| NOFFFD | Smoothing parameter in FD module | – | 1 |
| SOIMOD | SIO model selector,SOIMOD=0: BSIMPD,SOIMOD=1: undefined model for PD and FE,SOIMOD=2: ideal FD | – | 0 |
| VBSA | Offset voltage due to non-idealities | V | 0 |
| VOFFFD | Smoothing parameter in FD module | V | 0 |

## Level 14 MOSFET Tables (BSIM4)

For complete documentation of the BSIM4 model, see the users' manual for the BSIM4, available for download at `http://bsim.berkeley.edu/models/bsim4/`. **Xyce** implements Version 4.6.1 of the BIMS4, you will have to get the documentation from the FTP archive on the Berkeley site.

The level 14 MOSFET device in **Xyce** is based on the Berkeley BSIM4 model version 4.6.1. Its parameters are given in the following tables. Note that the table is not yet in its final form and parameters have not all been properly categorized with units in place. For correct units, see the BSIM4 documentation available at the BSIM group's web site, `http://bsim.berkeley.edu/models/bsim4/`.

Table 2.80: BSIM4 Device Instance Parameters

| Parameter | Description | Units | Default |
|---|---|---|---|
| AD | Drain area | – | 0 |
| AS | Source area | – | 0 |
| IC2 | | – | 0 |
| IC3 | | – | 0 |
| L | Length | – | 5e-06 |
| M | Number of parallel copies | – | 1 |
| MIN | Minimize either D or S | – | 0 |
| NF | Number of fingers | – | 1 |
| NGCON | Number of gate contacts | – | 0 |
| OFF | Device is initially off | – | false |
| PD | Drain perimeter | – | 0 |
| PS | Source perimeter | – | 0 |
| RBDB | Body resistance | – | 0 |
| RBPB | Body resistance | – | 0 |
| RBPD | Body resistance | – | 0 |
| RBPS | Body resistance | – | 0 |
| RBSB | Body resistance | – | 0 |
| SA | distance between OD edge to poly of one side | – | 0 |
| SB | distance between OD edge to poly of the other side | – | 0 |
| SC | Distance to a single well edge | – | 0 |
| SCA | Integral of the first distribution function for scattered well dopant | – | 0 |
| SCB | Integral of the second distribution function for scattered well dopant | – | 0 |
| SCC | Integral of the third distribution function for scattered well dopant | – | 0 |

Table 2.80: BSIM4 Device Instance Parameters

| Parameter | Description | Units | Default |
|---|---|---|---|
| SD | distance between neighbour fingers | – | 0 |
| W | Width | – | 5e-06 |
| XGW | Distance from gate contact center to device edge | – | 0 |
| | ***Basic Parameters*** | | |
| DELVTO | Zero bias threshold voltage variation | V | 0 |
| | ***Control Parameters*** | | |
| ACNQSMOD | AC NQS model selector | – | 0 |
| GEOMOD | Geometry dependent parasitics model selector | – | 0 |
| RBODYMOD | Distributed body R model selector | – | 0 |
| RGATEMOD | Gate resistance model selector | – | 0 |
| RGEOMOD | S/D resistance and contact model selector | – | 0 |
| TRNQSMOD | Transient NQS model selector | – | 0 |
| | ***Temperature Parameters*** | | |
| TEMP | Device temperature | °C | Ambient Tempera-ture |
| | ***Voltage Parameters*** | | |
| IC1 | Vector of initial values: Vds,Vgs,Vbs | V | 0 |
| | ***Asymmetric and Bias-Dependent $R_{ds}$ Parameters*** | | |
| NRD | Number of squares in drain | – | 1 |
| NRS | Number of squares in source | – | 1 |

Table 2.81: BSIM4 Device Model Parameters

| Parameter | Description | Units | Default |
|---|---|---|---|
| AF | Flicker noise exponent | – | 1 |
| AIGSD | Parameter for Igs,d | – | 0.0136 |
| AT | Temperature coefficient of vsat | – | 33000 |
| BIGSD | Parameter for Igs,d | – | 0.00171 |
| BVD | Drain diode breakdown voltage | – | 10 |
| BVS | Source diode breakdown voltage | – | 10 |
| CIGSD | Parameter for Igs,d | – | 0.075 |
| CJD | Drain bottom junction capacitance per unit area | – | 0.0005 |
| CJS | Source bottom junction capacitance per unit area | – | 0.0005 |
| CJSWD | Drain sidewall junction capacitance per unit periphery | – | 5e-10 |

Table 2.81: BSIM4 Device Model Parameters

| Parameter | Description | Units | Default |
|---|---|---|---|
| CJSWGD | Drain (gate side) sidewall junction capacitance per unit width | – | 0 |
| CJSWGS | Source (gate side) sidewall junction capacitance per unit width | – | 0 |
| CJSWS | Source sidewall junction capacitance per unit periphery | – | 5e-10 |
| DLCIG | Delta L for Ig model | – | 0 |
| DMCG | Distance of Mid-Contact to Gate edge | – | 0 |
| DMCGT | Distance of Mid-Contact to Gate edge in Test structures | – | 0 |
| DMCI | Distance of Mid-Contact to Isolation | – | 0 |
| DMDG | Distance of Mid-Diffusion to Gate edge | – | 0 |
| DWJ | Delta W for S/D junctions | – | 0 |
| EF | Flicker noise frequency exponent | – | 1 |
| EM | Flicker noise parameter | – | 4.1e+07 |
| EPSRGATE | Dielectric constant of gate relative to vacuum | – | 11.7 |
| GBMIN | Minimum body conductance | $\Omega^{-1}$ | 1e-12 |
| IJTHDFWD | Forward drain diode forward limiting current | – | 0.1 |
| IJTHDREV | Reverse drain diode forward limiting current | – | 0.1 |
| IJTHSFWD | Forward source diode forward limiting current | – | 0.1 |
| IJTHSREV | Reverse source diode forward limiting current | – | 0.1 |
| JSD | Bottom drain junction reverse saturation current density | – | 0.0001 |
| JSS | Bottom source junction reverse saturation current density | – | 0.0001 |
| JSWD | Isolation edge sidewall drain junction reverse saturation current density | – | 0 |
| JSWGD | Gate edge drain junction reverse saturation current density | – | 0 |
| JSWGS | Gate edge source junction reverse saturation current density | – | 0 |
| JSWS | Isolation edge sidewall source junction reverse saturation current density | – | 0 |
| JTSD | Drain bottom trap-assisted saturation current density | – | 0 |
| JTSS | Source bottom trap-assisted saturation current density | – | 0 |
| JTSSWD | Drain STI sidewall trap-assisted saturation current density | – | 0 |

Table 2.81: BSIM4 Device Model Parameters

| Parameter | Description | Units | Default |
|---|---|---|---|
| JTSSWGD | Drain gate-edge sidewall trap-assisted saturation current density | – | 0 |
| JTSSWGS | Source gate-edge sidewall trap-assisted saturation current density | – | 0 |
| JTSSWS | Source STI sidewall trap-assisted saturation current density | – | 0 |
| K2WE | K2 shift factor for well proximity effect | – | 0 |
| K3B | Body effect coefficient of k3 | – | 0 |
| KF | Flicker noise coefficient | – | 0 |
| KT1 | Temperature coefficient of Vth | – | -0.11 |
| KT1L | Temperature coefficient of Vth | – | 0 |
| KT2 | Body-coefficient of kt1 | – | 0.022 |
| KU0 | Mobility degradation/enhancement coefficient for LOD | – | 0 |
| KU0WE | Mobility degradation factor for well proximity effect | – | 0 |
| KVSAT | Saturation velocity degradation/enhancement parameter for LOD | – | 0 |
| KVTH0 | Threshold degradation/enhancement parameter for LOD | – | 0 |
| KVTH0WE | Threshold shift factor for well proximity effect | – | 0 |
| LA0 | Length dependence of a0 | – | 0 |
| LA1 | Length dependence of a1 | – | 0 |
| LA2 | Length dependence of a2 | – | 0 |
| LACDE | Length dependence of acde | – | 0 |
| LAGIDL | Length dependence of agidl | – | 0 |
| LAGISL | Length dependence of agisl | – | 0 |
| LAGS | Length dependence of ags | – | 0 |
| LAIGBACC | Length dependence of aigbacc | – | 0 |
| LAIGBINV | Length dependence of aigbinv | – | 0 |
| LAIGC | Length dependence of aigc | – | 0 |
| LAIGD | Length dependence of aigd | – | 0 |
| LAIGS | Length dependence of aigs | – | 0 |
| LAIGSD | Length dependence of aigsd | – | 0 |
| LALPHA0 | Length dependence of alpha0 | – | 0 |
| LALPHA1 | Length dependence of alpha1 | – | 0 |
| LAT | Length dependence of at | – | 0 |

Table 2.81: BSIM4 Device Model Parameters

| Parameter | Description | Units | Default |
|---|---|---|---|
| LB0 | Length dependence of b0 | – | 0 |
| LB1 | Length dependence of b1 | – | 0 |
| LBETA0 | Length dependence of beta0 | – | 0 |
| LBGIDL | Length dependence of bgidl | – | 0 |
| LBGISL | Length dependence of bgisl | – | 0 |
| LBIGBACC | Length dependence of bigbacc | – | 0 |
| LBIGBINV | Length dependence of bigbinv | – | 0 |
| LBIGC | Length dependence of bigc | – | 0 |
| LBIGD | Length dependence of bigd | – | 0 |
| LBIGS | Length dependence of bigs | – | 0 |
| LBIGSD | Length dependence of bigsd | – | 0 |
| LCDSC | Length dependence of cdsc | – | 0 |
| LCDSCB | Length dependence of cdscb | – | 0 |
| LCDSCD | Length dependence of cdscd | – | 0 |
| LCF | Length dependence of cf | – | 0 |
| LCGDL | Length dependence of cgdl | – | 0 |
| LCGIDL | Length dependence of cgidl | – | 0 |
| LCGISL | Length dependence of cgisl | – | 0 |
| LCGSL | Length dependence of cgsl | – | 0 |
| LCIGBACC | Length dependence of cigbacc | – | 0 |
| LCIGBINV | Length dependence of cigbinv | – | 0 |
| LCIGC | Length dependence of cigc | – | 0 |
| LCIGD | Length dependence of cigd | – | 0 |
| LCIGS | Length dependence of cigs | – | 0 |
| LCIGSD | Length dependence of cigsd | – | 0 |
| LCIT | Length dependence of cit | – | 0 |
| LCKAPPAD | Length dependence of ckappad | – | 0 |
| LCKAPPAS | Length dependence of ckappas | – | 0 |
| LCLC | Length dependence of clc | – | 0 |
| LCLE | Length dependence of cle | – | 0 |
| LDELTA | Length dependence of delta | – | 0 |
| LDROUT | Length dependence of drout | – | 0 |
| LDSUB | Length dependence of dsub | – | 0 |
| LDVT0 | Length dependence of dvt0 | – | 0 |
| LDVT0W | Length dependence of dvt0w | – | 0 |

Table 2.81: BSIM4 Device Model Parameters

| Parameter | Description | Units | Default |
|---|---|---|---|
| LDVT1 | Length dependence of dvt1 | – | 0 |
| LDVT1W | Length dependence of dvt1w | – | 0 |
| LDVT2 | Length dependence of dvt2 | – | 0 |
| LDVT2W | Length dependence of dvt2w | – | 0 |
| LDVTP0 | Length dependence of dvtp0 | – | 0 |
| LDVTP1 | Length dependence of dvtp1 | – | 0 |
| LDWB | Length dependence of dwb | – | 0 |
| LDWG | Length dependence of dwg | – | 0 |
| LEGIDL | Length dependence of egidl | – | 0 |
| LEGISL | Length dependence of egisl | – | 0 |
| LEIGBINV | Length dependence for eigbinv | – | 0 |
| LETA0 | Length dependence of eta0 | – | 0 |
| LETAB | Length dependence of etab | – | 0 |
| LEU | Length dependence of eu | – | 0 |
| LFPROUT | Length dependence of pdiblcb | – | 0 |
| LGAMMA1 | Length dependence of gamma1 | – | 0 |
| LGAMMA2 | Length dependence of gamma2 | – | 0 |
| LINTNOI | lint offset for noise calculation | – | 0 |
| LK1 | Length dependence of k1 | – | 0 |
| LK2 | Length dependence of k2 | – | 0 |
| LK2WE | Length dependence of k2we | – | 0 |
| LK3 | Length dependence of k3 | – | 0 |
| LK3B | Length dependence of k3b | – | 0 |
| LKETA | Length dependence of keta | – | 0 |
| LKT1 | Length dependence of kt1 | – | 0 |
| LKT1L | Length dependence of kt1l | – | 0 |
| LKT2 | Length dependence of kt2 | – | 0 |
| LKU0 | Length dependence of ku0 | – | 0 |
| LKU0WE | Length dependence of ku0we | – | 0 |
| LKVTH0 | Length dependence of kvth0 | – | 0 |
| LKVTH0WE | Length dependence of kvth0we | – | 0 |
| LL | Length reduction parameter | – | 0 |
| LLAMBDA | Length dependence of lambda | – | 0 |
| LLC | Length reduction parameter for CV | – | 0 |
| LLN | Length reduction parameter | – | 1 |

Table 2.81: BSIM4 Device Model Parameters

| Parameter | Description | Units | Default |
|---|---|---|---|
| LLODKU0 | Length parameter for u0 LOD effect | – | 0 |
| LLODVTH | Length parameter for vth LOD effect | – | 0 |
| LLP | Length dependence of lp | – | 0 |
| LLPE0 | Length dependence of lpe0 | – | 0 |
| LLPEB | Length dependence of lpeb | – | 0 |
| LMAX | Maximum length for the model | – | 1 |
| LMIN | Minimum length for the model | – | 0 |
| LMINV | Length dependence of minv | – | 0 |
| LMINVCV | Length dependence of minvcv | – | 0 |
| LMOIN | Length dependence of moin | – | 0 |
| LNDEP | Length dependence of ndep | – | 0 |
| LNFACTOR | Length dependence of nfactor | – | 0 |
| LNGATE | Length dependence of ngate | – | 0 |
| LNIGBACC | Length dependence of nigbacc | – | 0 |
| LNIGBINV | Length dependence of nigbinv | – | 0 |
| LNIGC | Length dependence of nigc | – | 0 |
| LNOFF | Length dependence of noff | – | 0 |
| LNSD | Length dependence of nsd | – | 0 |
| LNSUB | Length dependence of nsub | – | 0 |
| LNTOX | Length dependence of ntox | – | 0 |
| LODETA0 | eta0 shift modification factor for stress effect | – | 1 |
| LODK2 | K2 shift modification factor for stress effect | – | 1 |
| LPCLM | Length dependence of pclm | – | 0 |
| LPDIBLC1 | Length dependence of pdiblc1 | – | 0 |
| LPDIBLC2 | Length dependence of pdiblc2 | – | 0 |
| LPDIBLCB | Length dependence of pdiblcb | – | 0 |
| LPDITS | Length dependence of pdits | – | 0 |
| LPDITSD | Length dependence of pditsd | – | 0 |
| LPHIN | Length dependence of phin | – | 0 |
| LPIGCD | Length dependence for pigcd | – | 0 |
| LPOXEDGE | Length dependence for poxedge | – | 0 |
| LPRT | Length dependence of prt | – | 0 |
| LPRWB | Length dependence of prwb | – | 0 |
| LPRWG | Length dependence of prwg | – | 0 |
| LPSCBE1 | Length dependence of pscbe1 | – | 0 |

Table 2.81: BSIM4 Device Model Parameters

| Parameter | Description | Units | Default |
|---|---|---|---|
| LPSCBE2 | Length dependence of pscbe2 | – | 0 |
| LPVAG | Length dependence of pvag | – | 0 |
| LRDSW | Length dependence of rdsw | – | 0 |
| LRDW | Length dependence of rdw | – | 0 |
| LRSW | Length dependence of rsw | – | 0 |
| LTVFBSDOFF | Length dependence of tvfbsdoff | – | 0 |
| LTVOFF | Length dependence of tvoff | – | 0 |
| LU0 | Length dependence of u0 | – | 0 |
| LUA | Length dependence of ua | – | 0 |
| LUA1 | Length dependence of ua1 | – | 0 |
| LUB | Length dependence of ub | – | 0 |
| LUB1 | Length dependence of ub1 | – | 0 |
| LUC | Length dependence of uc | – | 0 |
| LUC1 | Length dependence of uc1 | – | 0 |
| LUD | Length dependence of ud | – | 0 |
| LUD1 | Length dependence of ud1 | – | 0 |
| LUP | Length dependence of up | – | 0 |
| LUTE | Length dependence of ute | – | 0 |
| LVBM | Length dependence of vbm | – | 0 |
| LVBX | Length dependence of vbx | – | 0 |
| LVFB | Length dependence of vfb | – | 0 |
| LVFBCV | Length dependence of vfbcv | – | 0 |
| LVFBSDOFF | Length dependence of vfbsdoff | – | 0 |
| LVOFF | Length dependence of voff | – | 0 |
| LVOFFCV | Length dependence of voffcv | – | 0 |
| LVSAT | Length dependence of vsat | – | 0 |
| LVTH0 | | – | 0 |
| LVTL | Length dependence of vtl | – | 0 |
| LW | Length reduction parameter | – | 0 |
| LW0 | Length dependence of w0 | – | 0 |
| LWC | Length reduction parameter for CV | – | 0 |
| LWL | Length reduction parameter | – | 0 |
| LWLC | Length reduction parameter for CV | – | 0 |
| LWN | Length reduction parameter | – | 1 |
| LWR | Length dependence of wr | – | 0 |

Table 2.81: BSIM4 Device Model Parameters

| Parameter | Description | Units | Default |
|---|---|---|---|
| LXJ | Length dependence of xj | – | 0 |
| LXN | Length dependence of xn | – | 0 |
| LXRCRG1 | Length dependence of xrcrg1 | – | 0 |
| LXRCRG2 | Length dependence of xrcrg2 | – | 0 |
| LXT | Length dependence of xt | – | 0 |
| MJD | Drain bottom junction capacitance grading coefficient | – | 0.5 |
| MJS | Source bottom junction capacitance grading coefficient | – | 0.5 |
| MJSWD | Drain sidewall junction capacitance grading coefficient | – | 0.33 |
| MJSWGD | Drain (gate side) sidewall junction capacitance grading coefficient | – | 0.33 |
| MJSWGS | Source (gate side) sidewall junction capacitance grading coefficient | – | 0.33 |
| MJSWS | Source sidewall junction capacitance grading coefficient | – | 0.33 |
| NGCON | Number of gate contacts | – | 1 |
| NJD | Drain junction emission coefficient | – | 1 |
| NJS | Source junction emission coefficient | – | 1 |
| NJTS | Non-ideality factor for bottom junction | – | 20 |
| NJTSD | Non-ideality factor for bottom junction drain side | – | 20 |
| NJTSSW | Non-ideality factor for STI sidewall junction | – | 20 |
| NJTSSWD | Non-ideality factor for STI sidewall junction drain side | – | 20 |
| NJTSSWG | Non-ideality factor for gate-edge sidewall junction | – | 20 |
| NJTSSWGD | Non-ideality factor for gate-edge sidewall junction drain side | – | 20 |
| NTNOI | Thermal noise parameter | – | 1 |
| PA0 | Cross-term dependence of a0 | – | 0 |
| PA1 | Cross-term dependence of a1 | – | 0 |
| PA2 | Cross-term dependence of a2 | – | 0 |
| PACDE | Cross-term dependence of acde | – | 0 |
| PAGIDL | Cross-term dependence of agidl | – | 0 |
| PAGISL | Cross-term dependence of agisl | – | 0 |
| PAGS | Cross-term dependence of ags | – | 0 |
| PAIGBACC | Cross-term dependence of aigbacc | – | 0 |

Table 2.81: BSIM4 Device Model Parameters

| Parameter | Description | Units | Default |
|---|---|---|---|
| PAIGBINV | Cross-term dependence of aigbinv | – | 0 |
| PAIGC | Cross-term dependence of aigc | – | 0 |
| PAIGD | Cross-term dependence of aigd | – | 0 |
| PAIGS | Cross-term dependence of aigs | – | 0 |
| PAIGSD | Cross-term dependence of aigsd | – | 0 |
| PALPHA0 | Cross-term dependence of alpha0 | – | 0 |
| PALPHA1 | Cross-term dependence of alpha1 | – | 0 |
| PAT | Cross-term dependence of at | – | 0 |
| PB0 | Cross-term dependence of b0 | – | 0 |
| PB1 | Cross-term dependence of b1 | – | 0 |
| PBD | Drain junction built-in potential | – | 1 |
| PBETA0 | Cross-term dependence of beta0 | – | 0 |
| PBGIDL | Cross-term dependence of bgidl | – | 0 |
| PBGISL | Cross-term dependence of bgisl | – | 0 |
| PBIGBACC | Cross-term dependence of bigbacc | – | 0 |
| PBIGBINV | Cross-term dependence of bigbinv | – | 0 |
| PBIGC | Cross-term dependence of bigc | – | 0 |
| PBIGD | Cross-term dependence of bigd | – | 0 |
| PBIGS | Cross-term dependence of bigs | – | 0 |
| PBIGSD | Cross-term dependence of bigsd | – | 0 |
| PBS | Source junction built-in potential | – | 1 |
| PBSWD | Drain sidewall junction capacitance built in potential | – | 1 |
| PBSWGD | Drain (gate side) sidewall junction capacitance built in potential | – | 0 |
| PBSWGS | Source (gate side) sidewall junction capacitance built in potential | – | 0 |
| PBSWS | Source sidewall junction capacitance built in potential | – | 1 |
| PCDSC | Cross-term dependence of cdsc | – | 0 |
| PCDSCB | Cross-term dependence of cdscb | – | 0 |
| PCDSCD | Cross-term dependence of cdscd | – | 0 |
| PCF | Cross-term dependence of cf | – | 0 |
| PCGDL | Cross-term dependence of cgdl | – | 0 |
| PCGIDL | Cross-term dependence of cgidl | – | 0 |
| PCGISL | Cross-term dependence of cgisl | – | 0 |

Table 2.81: BSIM4 Device Model Parameters

| Parameter | Description | Units | Default |
|---|---|---|---|
| PCGSL | Cross-term dependence of cgsl | – | 0 |
| PCIGBACC | Cross-term dependence of cigbacc | – | 0 |
| PCIGBINV | Cross-term dependence of cigbinv | – | 0 |
| PCIGC | Cross-term dependence of cigc | – | 0 |
| PCIGD | Cross-term dependence of cigd | – | 0 |
| PCIGS | Cross-term dependence of cigs | – | 0 |
| PCIGSD | Cross-term dependence of cigsd | – | 0 |
| PCIT | Cross-term dependence of cit | – | 0 |
| PCKAPPAD | Cross-term dependence of ckappad | – | 0 |
| PCKAPPAS | Cross-term dependence of ckappas | – | 0 |
| PCLC | Cross-term dependence of clc | – | 0 |
| PCLE | Cross-term dependence of cle | – | 0 |
| PDELTA | Cross-term dependence of delta | – | 0 |
| PDROUT | Cross-term dependence of drout | – | 0 |
| PDSUB | Cross-term dependence of dsub | – | 0 |
| PDVT0 | Cross-term dependence of dvt0 | – | 0 |
| PDVT0W | Cross-term dependence of dvt0w | – | 0 |
| PDVT1 | Cross-term dependence of dvt1 | – | 0 |
| PDVT1W | Cross-term dependence of dvt1w | – | 0 |
| PDVT2 | Cross-term dependence of dvt2 | – | 0 |
| PDVT2W | Cross-term dependence of dvt2w | – | 0 |
| PDVTP0 | Cross-term dependence of dvtp0 | – | 0 |
| PDVTP1 | Cross-term dependence of dvtp1 | – | 0 |
| PDWB | Cross-term dependence of dwb | – | 0 |
| PDWG | Cross-term dependence of dwg | – | 0 |
| PEGIDL | Cross-term dependence of egidl | – | 0 |
| PEGISL | Cross-term dependence of egisl | – | 0 |
| PEIGBINV | Cross-term dependence for eigbinv | – | 0 |
| PETA0 | Cross-term dependence of eta0 | – | 0 |
| PETAB | Cross-term dependence of etab | – | 0 |
| PEU | Cross-term dependence of eu | – | 0 |
| PFPROUT | Cross-term dependence of pdiblcb | – | 0 |
| PGAMMA1 | Cross-term dependence of gamma1 | – | 0 |
| PGAMMA2 | Cross-term dependence of gamma2 | – | 0 |
| PHIG | Work Function of gate | – | 4.05 |

Table 2.81: BSIM4 Device Model Parameters

| Parameter | Description | Units | Default |
|---|---|---|---|
| PK1 | Cross-term dependence of k1 | – | 0 |
| PK2 | Cross-term dependence of k2 | – | 0 |
| PK2WE | Cross-term dependence of k2we | – | 0 |
| PK3 | Cross-term dependence of k3 | – | 0 |
| PK3B | Cross-term dependence of k3b | – | 0 |
| PKETA | Cross-term dependence of keta | – | 0 |
| PKT1 | Cross-term dependence of kt1 | – | 0 |
| PKT1L | Cross-term dependence of kt1l | – | 0 |
| PKT2 | Cross-term dependence of kt2 | – | 0 |
| PKU0 | Cross-term dependence of ku0 | – | 0 |
| PKU0WE | Cross-term dependence of ku0we | – | 0 |
| PKVTH0 | Cross-term dependence of kvth0 | – | 0 |
| PKVTH0WE | Cross-term dependence of kvth0we | – | 0 |
| PLAMBDA | Cross-term dependence of lambda | – | 0 |
| PLP | Cross-term dependence of lp | – | 0 |
| PLPE0 | Cross-term dependence of lpe0 | – | 0 |
| PLPEB | Cross-term dependence of lpeb | – | 0 |
| PMINV | Cross-term dependence of minv | – | 0 |
| PMINVCV | Cross-term dependence of minvcv | – | 0 |
| PMOIN | Cross-term dependence of moin | – | 0 |
| PNDEP | Cross-term dependence of ndep | – | 0 |
| PNFACTOR | Cross-term dependence of nfactor | – | 0 |
| PNGATE | Cross-term dependence of ngate | – | 0 |
| PNIGBACC | Cross-term dependence of nigbacc | – | 0 |
| PNIGBINV | Cross-term dependence of nigbinv | – | 0 |
| PNIGC | Cross-term dependence of nigc | – | 0 |
| PNOFF | Cross-term dependence of noff | – | 0 |
| PNSD | Cross-term dependence of nsd | – | 0 |
| PNSUB | Cross-term dependence of nsub | – | 0 |
| PNTOX | Cross-term dependence of ntox | – | 0 |
| PPCLM | Cross-term dependence of pclm | – | 0 |
| PPDIBLC1 | Cross-term dependence of pdiblc1 | – | 0 |
| PPDIBLC2 | Cross-term dependence of pdiblc2 | – | 0 |
| PPDIBLCB | Cross-term dependence of pdiblcb | – | 0 |
| PPDITS | Cross-term dependence of pdits | – | 0 |

Table 2.81: BSIM4 Device Model Parameters

| Parameter | Description | Units | Default |
|---|---|---|---|
| PPDITSD | Cross-term dependence of pditsd | – | 0 |
| PPHIN | Cross-term dependence of phin | – | 0 |
| PPIGCD | Cross-term dependence for pigcd | – | 0 |
| PPOXEDGE | Cross-term dependence for poxedge | – | 0 |
| PPRT | Cross-term dependence of prt | – | 0 |
| PPRWB | Cross-term dependence of prwb | – | 0 |
| PPRWG | Cross-term dependence of prwg | – | 0 |
| PPSCBE1 | Cross-term dependence of pscbe1 | – | 0 |
| PPSCBE2 | Cross-term dependence of pscbe2 | – | 0 |
| PPVAG | Cross-term dependence of pvag | – | 0 |
| PRDSW | Cross-term dependence of rdsw | – | 0 |
| PRDW | Cross-term dependence of rdw | – | 0 |
| PRSW | Cross-term dependence of rsw | – | 0 |
| PRT | Temperature coefficient of parasitic resistance | – | 0 |
| PTVFBSDOFF | Cross-term dependence of tvfbsdoff | – | 0 |
| PTVOFF | Cross-term dependence of tvoff | – | 0 |
| PU0 | Cross-term dependence of u0 | – | 0 |
| PUA | Cross-term dependence of ua | – | 0 |
| PUA1 | Cross-term dependence of ua1 | – | 0 |
| PUB | Cross-term dependence of ub | – | 0 |
| PUB1 | Cross-term dependence of ub1 | – | 0 |
| PUC | Cross-term dependence of uc | – | 0 |
| PUC1 | Cross-term dependence of uc1 | – | 0 |
| PUD | Cross-term dependence of ud | – | 0 |
| PUD1 | Cross-term dependence of ud1 | – | 0 |
| PUP | Cross-term dependence of up | – | 0 |
| PUTE | Cross-term dependence of ute | – | 0 |
| PVAG | Gate dependence of output resistance parameter | – | 0 |
| PVBM | Cross-term dependence of vbm | – | 0 |
| PVBX | Cross-term dependence of vbx | – | 0 |
| PVFB | Cross-term dependence of vfb | – | 0 |
| PVFBCV | Cross-term dependence of vfbcv | – | 0 |
| PVFBSDOFF | Cross-term dependence of vfbsdoff | – | 0 |
| PVOFF | Cross-term dependence of voff | – | 0 |
| PVOFFCV | Cross-term dependence of voffcv | – | 0 |

Table 2.81: BSIM4 Device Model Parameters

| Parameter | Description | Units | Default |
|---|---|---|---|
| PVSAT | Cross-term dependence of vsat | – | 0 |
| PVTH0 | | – | 0 |
| PVTL | Cross-term dependence of vtl | – | 0 |
| PW0 | Cross-term dependence of w0 | – | 0 |
| PWR | Cross-term dependence of wr | – | 0 |
| PXJ | Cross-term dependence of xj | – | 0 |
| PXN | Cross-term dependence of xn | – | 0 |
| PXRCRG1 | Cross-term dependence of xrcrg1 | – | 0 |
| PXRCRG2 | Cross-term dependence of xrcrg2 | – | 0 |
| PXT | Cross-term dependence of xt | – | 0 |
| RBDB | Resistance between bNode and dbNode | Ω | 50 |
| RBDBX0 | Body resistance RBDBX scaling | – | 100 |
| RBDBY0 | Body resistance RBDBY scaling | – | 100 |
| RBPB | Resistance between bNodePrime and bNode | Ω | 50 |
| RBPBX0 | Body resistance RBPBX scaling | – | 100 |
| RBPBXL | Body resistance RBPBX L scaling | – | 0 |
| RBPBXNF | Body resistance RBPBX NF scaling | – | 0 |
| RBPBXW | Body resistance RBPBX W scaling | – | 0 |
| RBPBY0 | Body resistance RBPBY scaling | – | 100 |
| RBPBYL | Body resistance RBPBY L scaling | – | 0 |
| RBPBYNF | Body resistance RBPBY NF scaling | – | 0 |
| RBPBYW | Body resistance RBPBY W scaling | – | 0 |
| RBPD | Resistance between bNodePrime and bNode | Ω | 50 |
| RBPD0 | Body resistance RBPD scaling | – | 50 |
| RBPDL | Body resistance RBPD L scaling | – | 0 |
| RBPDNF | Body resistance RBPD NF scaling | – | 0 |
| RBPDW | Body resistance RBPD W scaling | – | 0 |
| RBPS | Resistance between bNodePrime and sbNode | Ω | 50 |
| RBPS0 | Body resistance RBPS scaling | – | 50 |
| RBPSL | Body resistance RBPS L scaling | – | 0 |
| RBPSNF | Body resistance RBPS NF scaling | – | 0 |
| RBPSW | Body resistance RBPS W scaling | – | 0 |
| RBSB | Resistance between bNode and sbNode | Ω | 50 |
| RBSBX0 | Body resistance RBSBX scaling | – | 100 |
| RBSBY0 | Body resistance RBSBY scaling | – | 100 |

Table 2.81: BSIM4 Device Model Parameters

| Parameter | Description | Units | Default |
|---|---|---|---|
| RBSDBXL | Body resistance RBSDBX L scaling | – | 0 |
| RBSDBXNF | Body resistance RBSDBX NF scaling | – | 0 |
| RBSDBXW | Body resistance RBSDBX W scaling | – | 0 |
| RBSDBYL | Body resistance RBSDBY L scaling | – | 0 |
| RBSDBYNF | Body resistance RBSDBY NF scaling | – | 0 |
| RBSDBYW | Body resistance RBSDBY W scaling | – | 0 |
| RNOIA | Thermal noise coefficient | – | 0.577 |
| RNOIB | Thermal noise coefficient | – | 0.5164 |
| SAREF | Reference distance between OD edge to poly of one side | – | 1e-06 |
| SBREF | Reference distance between OD edge to poly of the other side | – | 1e-06 |
| SCREF | Reference distance to calculate SCA,SCB and SCC | – | 1e-06 |
| STETA0 | eta0 shift factor related to stress effect on vth | – | 0 |
| STK2 | K2 shift factor related to stress effect on vth | – | 0 |
| TCJ | Temperature coefficient of cj | – | 0 |
| TCJSW | Temperature coefficient of cjsw | – | 0 |
| TCJSWG | Temperature coefficient of cjswg | – | 0 |
| TKU0 | Temperature coefficient of KU0 | – | 0 |
| TNJTS | Temperature coefficient for NJTS | – | 0 |
| TNJTSD | Temperature coefficient for NJTSD | – | 0 |
| TNJTSSW | Temperature coefficient for NJTSSW | – | 0 |
| TNJTSSWD | Temperature coefficient for NJTSSWD | – | 0 |
| TNJTSSWG | Temperature coefficient for NJTSSWG | – | 0 |
| TNJTSSWGD | Temperature coefficient for NJTSSWGD | – | 0 |
| TNOIA | Thermal noise parameter | – | 1.5 |
| TNOIB | Thermal noise parameter | – | 3.5 |
| TNOM | Parameter measurement temperature | – | Ambient Tempera-ture |
| TPB | Temperature coefficient of pb | – | 0 |
| TPBSW | Temperature coefficient of pbsw | – | 0 |
| TPBSWG | Temperature coefficient of pbswg | – | 0 |
| TVFBSDOFF | Temperature parameter for vfbsdoff | – | 0 |
| TVOFF | Temperature parameter for voff | – | 0 |

Table 2.81: BSIM4 Device Model Parameters

| Parameter | Description | Units | Default |
|---|---|---|---|
| UA1 | Temperature coefficient of ua | – | 1e-09 |
| UB1 | Temperature coefficient of ub | – | -1e-18 |
| UC1 | Temperature coefficient of uc | – | 0 |
| UD1 | Temperature coefficient of ud | – | 0 |
| UTE | Temperature coefficient of mobility | – | -1.5 |
| VTSD | Drain bottom trap-assisted voltage dependent parameter | – | 10 |
| VTSS | Source bottom trap-assisted voltage dependent parameter | – | 10 |
| VTSSWD | Drain STI sidewall trap-assisted voltage dependent parameter | – | 10 |
| VTSSWGD | Drain gate-edge sidewall trap-assisted voltage dependent parameter | – | 10 |
| VTSSWGS | Source gate-edge sidewall trap-assisted voltage dependent parameter | – | 10 |
| VTSSWS | Source STI sidewall trap-assisted voltage dependent parameter | – | 10 |
| WA0 | Width dependence of a0 | – | 0 |
| WA1 | Width dependence of a1 | – | 0 |
| WA2 | Width dependence of a2 | – | 0 |
| WACDE | Width dependence of acde | – | 0 |
| WAGIDL | Width dependence of agidl | – | 0 |
| WAGISL | Width dependence of agisl | – | 0 |
| WAGS | Width dependence of ags | – | 0 |
| WAIGBACC | Width dependence of aigbacc | – | 0 |
| WAIGBINV | Width dependence of aigbinv | – | 0 |
| WAIGC | Width dependence of aigc | – | 0 |
| WAIGD | Width dependence of aigd | – | 0 |
| WAIGS | Width dependence of aigs | – | 0 |
| WAIGSD | Width dependence of aigsd | – | 0 |
| WALPHA0 | Width dependence of alpha0 | – | 0 |
| WALPHA1 | Width dependence of alpha1 | – | 0 |
| WAT | Width dependence of at | – | 0 |
| WB0 | Width dependence of b0 | – | 0 |
| WB1 | Width dependence of b1 | – | 0 |
| WBETA0 | Width dependence of beta0 | – | 0 |
| WBGIDL | Width dependence of bgidl | – | 0 |

Table 2.81: BSIM4 Device Model Parameters

| Parameter | Description | Units | Default |
|---|---|---|---|
| WBGISL | Width dependence of bgisl | – | 0 |
| WBIGBACC | Width dependence of bigbacc | – | 0 |
| WBIGBINV | Width dependence of bigbinv | – | 0 |
| WBIGC | Width dependence of bigc | – | 0 |
| WBIGD | Width dependence of bigd | – | 0 |
| WBIGS | Width dependence of bigs | – | 0 |
| WBIGSD | Width dependence of bigsd | – | 0 |
| WCDSC | Width dependence of cdsc | – | 0 |
| WCDSCB | Width dependence of cdscb | – | 0 |
| WCDSCD | Width dependence of cdscd | – | 0 |
| WCF | Width dependence of cf | – | 0 |
| WCGDL | Width dependence of cgdl | – | 0 |
| WCGIDL | Width dependence of cgidl | – | 0 |
| WCGISL | Width dependence of cgisl | – | 0 |
| WCGSL | Width dependence of cgsl | – | 0 |
| WCIGBACC | Width dependence of cigbacc | – | 0 |
| WCIGBINV | Width dependence of cigbinv | – | 0 |
| WCIGC | Width dependence of cigc | – | 0 |
| WCIGD | Width dependence of cigd | – | 0 |
| WCIGS | Width dependence of cigs | – | 0 |
| WCIGSD | Width dependence of cigsd | – | 0 |
| WCIT | Width dependence of cit | – | 0 |
| WCKAPPAD | Width dependence of ckappad | – | 0 |
| WCKAPPAS | Width dependence of ckappas | – | 0 |
| WCLC | Width dependence of clc | – | 0 |
| WCLE | Width dependence of cle | – | 0 |
| WDELTA | Width dependence of delta | – | 0 |
| WDROUT | Width dependence of drout | – | 0 |
| WDSUB | Width dependence of dsub | – | 0 |
| WDVT0 | Width dependence of dvt0 | – | 0 |
| WDVT0W | Width dependence of dvt0w | – | 0 |
| WDVT1 | Width dependence of dvt1 | – | 0 |
| WDVT1W | Width dependence of dvt1w | – | 0 |
| WDVT2 | Width dependence of dvt2 | – | 0 |
| WDVT2W | Width dependence of dvt2w | – | 0 |

Table 2.81: BSIM4 Device Model Parameters

| Parameter | Description | Units | Default |
|---|---|---|---|
| WDVTP0 | Width dependence of dvtp0 | – | 0 |
| WDVTP1 | Width dependence of dvtp1 | – | 0 |
| WDWB | Width dependence of dwb | – | 0 |
| WDWG | Width dependence of dwg | – | 0 |
| WEB | Coefficient for SCB | – | 0 |
| WEC | Coefficient for SCC | – | 0 |
| WEGIDL | Width dependence of egidl | – | 0 |
| WEGISL | Width dependence of egisl | – | 0 |
| WEIGBINV | Width dependence for eigbinv | – | 0 |
| WETA0 | Width dependence of eta0 | – | 0 |
| WETAB | Width dependence of etab | – | 0 |
| WEU | Width dependence of eu | – | 0 |
| WFPROUT | Width dependence of pdiblcb | – | 0 |
| WGAMMA1 | Width dependence of gamma1 | – | 0 |
| WGAMMA2 | Width dependence of gamma2 | – | 0 |
| WK1 | Width dependence of k1 | – | 0 |
| WK2 | Width dependence of k2 | – | 0 |
| WK2WE | Width dependence of k2we | – | 0 |
| WK3 | Width dependence of k3 | – | 0 |
| WK3B | Width dependence of k3b | – | 0 |
| WKETA | Width dependence of keta | – | 0 |
| WKT1 | Width dependence of kt1 | – | 0 |
| WKT1L | Width dependence of kt1l | – | 0 |
| WKT2 | Width dependence of kt2 | – | 0 |
| WKU0 | Width dependence of ku0 | – | 0 |
| WKU0WE | Width dependence of ku0we | – | 0 |
| WKVTH0 | Width dependence of kvth0 | – | 0 |
| WKVTH0WE | Width dependence of kvth0we | – | 0 |
| WL | Width reduction parameter | – | 0 |
| WLAMBDA | Width dependence of lambda | – | 0 |
| WLC | Width reduction parameter for CV | – | 0 |
| WLN | Width reduction parameter | – | 1 |
| WLOD | Width parameter for stress effect | – | 0 |
| WLODKU0 | Width parameter for u0 LOD effect | – | 0 |
| WLODVTH | Width parameter for vth LOD effect | – | 0 |

Table 2.81: BSIM4 Device Model Parameters

| Parameter | Description | Units | Default |
|---|---|---|---|
| WLP | Width dependence of lp | – | 0 |
| WLPE0 | Width dependence of lpe0 | – | 0 |
| WLPEB | Width dependence of lpeb | – | 0 |
| WMAX | Maximum width for the model | – | 1 |
| WMIN | Minimum width for the model | – | 0 |
| WMINV | Width dependence of minv | – | 0 |
| WMINVCV | Width dependence of minvcv | – | 0 |
| WMOIN | Width dependence of moin | – | 0 |
| WNDEP | Width dependence of ndep | – | 0 |
| WNFACTOR | Width dependence of nfactor | – | 0 |
| WNGATE | Width dependence of ngate | – | 0 |
| WNIGBACC | Width dependence of nigbacc | – | 0 |
| WNIGBINV | Width dependence of nigbinv | – | 0 |
| WNIGC | Width dependence of nigc | – | 0 |
| WNOFF | Width dependence of noff | – | 0 |
| WNSD | Width dependence of nsd | – | 0 |
| WNSUB | Width dependence of nsub | – | 0 |
| WNTOX | Width dependence of ntox | – | 0 |
| WPCLM | Width dependence of pclm | – | 0 |
| WPDIBLC1 | Width dependence of pdiblc1 | – | 0 |
| WPDIBLC2 | Width dependence of pdiblc2 | – | 0 |
| WPDIBLCB | Width dependence of pdiblcb | – | 0 |
| WPDITS | Width dependence of pdits | – | 0 |
| WPDITSD | Width dependence of pditsd | – | 0 |
| WPEMOD | Flag for WPE model (WPEMOD=1 to activate this model) | – | 0 |
| WPHIN | Width dependence of phin | – | 0 |
| WPIGCD | Width dependence for pigcd | – | 0 |
| WPOXEDGE | Width dependence for poxedge | – | 0 |
| WPRT | Width dependence of prt | – | 0 |
| WPRWB | Width dependence of prwb | – | 0 |
| WPRWG | Width dependence of prwg | – | 0 |
| WPSCBE1 | Width dependence of pscbe1 | – | 0 |
| WPSCBE2 | Width dependence of pscbe2 | – | 0 |
| WPVAG | Width dependence of pvag | – | 0 |

Table 2.81: BSIM4 Device Model Parameters

| Parameter | Description | Units | Default |
|---|---|---|---|
| WRDSW | Width dependence of rdsw | – | 0 |
| WRDW | Width dependence of rdw | – | 0 |
| WRSW | Width dependence of rsw | – | 0 |
| WTVFBSDOFF | Width dependence of tvfbsdoff | – | 0 |
| WTVOFF | Width dependence of tvoff | – | 0 |
| WU0 | Width dependence of u0 | – | 0 |
| WUA | Width dependence of ua | – | 0 |
| WUA1 | Width dependence of ua1 | – | 0 |
| WUB | Width dependence of ub | – | 0 |
| WUB1 | Width dependence of ub1 | – | 0 |
| WUC | Width dependence of uc | – | 0 |
| WUC1 | Width dependence of uc1 | – | 0 |
| WUD | Width dependence of ud | – | 0 |
| WUD1 | Width dependence of ud1 | – | 0 |
| WUP | Width dependence of up | – | 0 |
| WUTE | Width dependence of ute | – | 0 |
| WVBM | Width dependence of vbm | – | 0 |
| WVBX | Width dependence of vbx | – | 0 |
| WVFB | Width dependence of vfb | – | 0 |
| WVFBCV | Width dependence of vfbcv | – | 0 |
| WVFBSDOFF | Width dependence of vfbsdoff | – | 0 |
| WVOFF | Width dependence of voff | – | 0 |
| WVOFFCV | Width dependence of voffcv | – | 0 |
| WVSAT | Width dependence of vsat | – | 0 |
| WVTH0 | | – | 0 |
| WVTL | Width dependence of vtl | – | 0 |
| WW | Width reduction parameter | – | 0 |
| WW0 | Width dependence of w0 | – | 0 |
| WWC | Width reduction parameter for CV | – | 0 |
| WWL | Width reduction parameter | – | 0 |
| WWLC | Width reduction parameter for CV | – | 0 |
| WWN | Width reduction parameter | – | 1 |
| WWR | Width dependence of wr | – | 0 |
| WXJ | Width dependence of xj | – | 0 |
| WXN | Width dependence of xn | – | 0 |

Table 2.81: BSIM4 Device Model Parameters

| Parameter | Description | Units | Default |
|---|---|---|---|
| WXRCRG1 | Width dependence of xrcrg1 | – | 0 |
| WXRCRG2 | Width dependence of xrcrg2 | – | 0 |
| WXT | Width dependence of xt | – | 0 |
| XGL | Variation in Ldrawn | – | 0 |
| XGW | Distance from gate contact center to device edge | – | 0 |
| XJBVD | Fitting parameter for drain diode breakdown current | – | 1 |
| XJBVS | Fitting parameter for source diode breakdown current | – | 1 |
| XL | L offset for channel length due to mask/etch effect | – | 0 |
| XRCRG1 | First fitting parameter the bias-dependent Rg | – | 12 |
| XRCRG2 | Second fitting parameter the bias-dependent Rg | – | 1 |
| XTID | Drainjunction current temperature exponent | – | 3 |
| XTIS | Source junction current temperature exponent | – | 3 |
| XTSD | Power dependence of JTSD on temperature | – | 0.02 |
| XTSS | Power dependence of JTSS on temperature | – | 0.02 |
| XTSSWD | Power dependence of JTSSWD on temperature | – | 0.02 |
| XTSSWGD | Power dependence of JTSSWGD on temperature | – | 0.02 |
| XTSSWGS | Power dependence of JTSSWGS on temperature | – | 0.02 |
| XTSSWS | Power dependence of JTSSWS on temperature | – | 0.02 |
| XW | W offset for channel width due to mask/etch effect | – | 0 |
| | ***Basic Parameters*** | | |
| A0 | Non-uniform depletion width effect coefficient. | – | 1 |
| A1 | Non-saturation effect coefficient | $V^{-1}$ | 0 |
| A2 | Non-saturation effect coefficient | – | 1 |
| ADOS | Charge centroid parameter | – | 1 |
| AGS | Gate bias coefficient of Abulk. | $V^{-1}$ | 0 |
| B0 | Abulk narrow width parameter | m | 0 |
| B1 | Abulk narrow width parameter | m | 0 |
| BDOS | Charge centroid parameter | – | 1 |
| BG0SUB | Band-gap of substrate at T=0K | eV | 1.16 |
| CDSC | Drain/Source and channel coupling capacitance | $F/m^2$ | 0.00024 |
| CDSCB | Body-bias dependence of cdsc | $F/(Vm^2)$ | 0 |

Table 2.81: BSIM4 Device Model Parameters

| Parameter | Description | Units | Default |
|---|---|---|---|
| CDSCD | Drain-bias dependence of cdsc | F/(Vm$^2$) | 0 |
| CIT | Interface state capacitance | F/m$^2$ | 0 |
| DELTA | Effective Vds parameter | V | 0.01 |
| DROUT | DIBL coefficient of output resistance | – | 0.56 |
| DSUB | DIBL coefficient in the subthreshold region | – | 0 |
| DVT0 | Short channel effect coeff. 0 | – | 2.2 |
| DVT0W | Narrow Width coeff. 0 | – | 0 |
| DVT1 | Short channel effect coeff. 1 | – | 0.53 |
| DVT1W | Narrow Width effect coeff. 1 | m$^{-1}$ | 5.3e+06 |
| DVT2 | Short channel effect coeff. 2 | V$^{-1}$ | -0.032 |
| DVT2W | Narrow Width effect coeff. 2 | V$^{-1}$ | -0.032 |
| DVTP0 | First parameter for Vth shift due to pocket | m | 0 |
| DVTP1 | Second parameter for Vth shift due to pocket | V$^{-1}$ | 0 |
| DWB | Width reduction parameter | m/V$^{1/2}$ | 0 |
| DWG | Width reduction parameter | m/V | 0 |
| EASUB | Electron affinity of substrate | V | 4.05 |
| EPSRSUB | Dielectric constant of substrate relative to vacuum | – | 11.7 |
| ETA0 | Subthreshold region DIBL coefficient | – | 0.08 |
| ETAB | Subthreshold region DIBL coefficient | V$^{-1}$ | -0.07 |
| EU | Mobility exponent | – | 0 |
| FPROUT | Rout degradation coefficient for pocket devices | V/m$^{1/2}$ | 0 |
| K1 | Bulk effect coefficient 1 | V$^{-1/2}$ | 0 |
| K2 | Bulk effect coefficient 2 | – | 0 |
| K3 | Narrow width effect coefficient | – | 80 |
| KETA | Body-bias coefficient of non-uniform depletion width effect. | V$^{-1}$ | -0.047 |
| LAMBDA | Velocity overshoot parameter | – | 0 |
| LC | back scattering parameter | m | 5e-09 |
| LINT | Length reduction parameter | m | 0 |
| LP | Channel length exponential factor of mobility | m | 1e-08 |
| LPE0 | Equivalent length of pocket region at zero bias | m | 1.74e-07 |
| LPEB | Equivalent length of pocket region accounting for body bias | m | 0 |
| MINV | Fitting parameter for moderate inversion in Vgsteff | – | 0 |

Table 2.81: BSIM4 Device Model Parameters

| Parameter | Description | Units | Default |
|---|---|---|---|
| NFACTOR | Subthreshold swing Coefficient | – | 1 |
| NIOSUB | Intrinsic carrier concentration of substrate at 300.15K | $cm^{-3}$ | 1.45e+10 |
| PCLM | Channel length modulation Coefficient | – | 1.3 |
| PDIBLC1 | Drain-induced barrier lowering coefficient | – | 0.39 |
| PDIBLC2 | Drain-induced barrier lowering coefficient | – | 0.0086 |
| PDIBLCB | Body-effect on drain-induced barrier lowering | $V^{-1}$ | 0 |
| PDITS | Coefficient for drain-induced Vth shifts | $V^{-1}$ | 0 |
| PDITSD | Vds dependence of drain-induced Vth shifts | $V^{-1}$ | 0 |
| PDITSL | Length dependence of drain-induced Vth shifts | $m^{-1}$ | 0 |
| PHIN | Adjusting parameter for surface potential due to non-uniform vertical doping | V | 0 |
| PSCBE1 | Substrate current body-effect coefficient | V/m | 4.24e+08 |
| PSCBE2 | Substrate current body-effect coefficient | m/V | 1e-05 |
| TBGASUB | First parameter of band-gap change due to temperature | eV/K | 0.000702 |
| TBGBSUB | Second parameter of band-gap change due to temperature | K | 1108 |
| UO | Low-field mobility at Tnom | $m^2/(Vs)$ | 0 |
| UA | Linear gate dependence of mobility | m/V | 0 |
| UB | Quadratic gate dependence of mobility | $m^2/V^2$ | 1e-19 |
| UC | Body-bias dependence of mobility | $V^{-1}$ | 0 |
| UD | Coulomb scattering factor of mobility | $m^{-2}$ | 0 |
| UP | Channel length linear factor of mobility | $m^{-2}$ | 0 |
| VBM | Maximum body voltage | V | -3 |
| VDDEOT | Voltage for extraction of equivalent gate oxide thickness | V | 1.5 |
| VFB | Flat Band Voltage | V | -1 |
| VOFF | Threshold voltage offset | V | -0.08 |
| VOFFL | Length dependence parameter for Vth offset | V | 0 |
| VSAT | Saturation velocity at tnom | m/s | 80000 |
| VTHO | | V | 0 |
| VTL | thermal velocity | m/s | 200000 |
| WO | Narrow width effect parameter | m | 2.5e-06 |
| WINT | Width reduction parameter | m | 0 |
| XN | back scattering parameter | – | 3 |

***Capacitance Parameters***

Table 2.81: BSIM4 Device Model Parameters

| Parameter | Description | Units | Default |
|---|---|---|---|
| ACDE | Exponential coefficient for finite charge thickness | m/V | 1 |
| CF | Fringe capacitance parameter | F/m | 0 |
| CGBO | Gate-bulk overlap capacitance per length | – | 0 |
| CGDL | New C-V model parameter | F/m | 0 |
| CGDO | Gate-drain overlap capacitance per width | F/m | 0 |
| CGSL | New C-V model parameter | F/m | 0 |
| CGSO | Gate-source overlap capacitance per width | F/m | 0 |
| CKAPPAD | D/G overlap C-V parameter | V | 0.6 |
| CKAPPAS | S/G overlap C-V parameter | V | 0.6 |
| CLC | Vdsat parameter for C-V model | m | 1e-07 |
| CLE | Vdsat parameter for C-V model | – | 0.6 |
| DLC | Delta L for C-V model | m | 0 |
| DWC | Delta W for C-V model | m | 0 |
| MINVCV | Fitting parameter for moderate inversion in Vgsteffcv | – | 0 |
| MOIN | Coefficient for gate-bias dependent surface potential | – | 15 |
| NOFF | C-V turn-on/off parameter | – | 1 |
| VFBCV | Flat Band Voltage parameter for capmod=0 only | V | -1 |
| VOFFCV | C-V lateral-shift parameter | V | 0 |
| VOFFCVL | Length dependence parameter for Vth offset in CV | – | 0 |
| XPART | Channel charge partitioning | F/m | 0 |
| | ***Control Parameters*** | | |
| ACNQSMOD | AC NQS model selector | – | 0 |
| BINUNIT | Bin unit selector | – | 1 |
| CAPMOD | Capacitance model selector | – | 2 |
| CVCHARGEMOD | Capacitance charge model selector | – | 0 |
| DIOMOD | Diode IV model selector | – | 1 |
| FNOIMOD | Flicker noise model selector | – | 1 |
| GEOMOD | Geometry dependent parasitics model selector | – | 0 |
| IGBMOD | Gate-to-body Ig model selector | – | 0 |
| IGCMOD | Gate-to-channel Ig model selector | – | 0 |
| MOBMOD | Mobility model selector | – | 0 |
| MTRLMOD | parameter for nonm-silicon substrate or metal gate selector | – | 0 |

Table 2.81: BSIM4 Device Model Parameters

| Parameter | Description | Units | Default |
|---|---|---|---|
| PARAMCHK | Model parameter checking selector | – | 1 |
| PERMOD | Pd and Ps model selector | – | 1 |
| RBODYMOD | Distributed body R model selector | – | 0 |
| RDSMOD | Bias-dependent S/D resistance model selector | – | 0 |
| RGATEMOD | Gate R model selector | – | 0 |
| TEMPMOD | Temperature model selector | – | 0 |
| TNOIMOD | Thermal noise model selector | – | 0 |
| TRNQSMOD | Transient NQS model selector | – | 0 |
| VERSION | parameter for model version | – | '4.6.1' |
| ***Flicker and Thermal Noise Parameters*** | | | |
| NOIA | Flicker Noise parameter a | – | 0 |
| NOIB | Flicker Noise parameter b | – | 0 |
| NOIC | Flicker Noise parameter c | – | 0 |
| ***Process Parameters*** | | | |
| DTOX | Defined as (toxe - toxp) | m | 0 |
| EOT | Equivalent gate oxide thickness in meters | m | 1.5e-09 |
| EPSROX | Dielectric constant of the gate oxide relative to vacuum | – | 3.9 |
| GAMMA1 | Vth body coefficient | $V^{1/2}$ | 0 |
| GAMMA2 | Vth body coefficient | $V^{1/2}$ | 0 |
| NDEP | Channel doping concentration at the depletion edge | $cm^{-3}$ | 1.7e+17 |
| NGATE | Poly-gate doping concentration | $cm^{-3}$ | 0 |
| NSD | S/D doping concentration | $cm^{-3}$ | 1e+20 |
| NSUB | Substrate doping concentration | $cm^{-3}$ | 6e+16 |
| RSH | Source-drain sheet resistance | $\Omega/\square$ | 0 |
| RSHG | Gate sheet resistance | $\Omega/\square$ | 0.1 |
| TOXE | Electrical gate oxide thickness in meters | m | 3e-09 |
| TOXM | Gate oxide thickness at which parameters are extracted | m | 3e-09 |
| TOXP | Physical gate oxide thickness in meters | m | 3e-09 |
| VBX | Vth transition body Voltage | V | 0 |
| XJ | Junction depth in meters | m | 1.5e-07 |
| XT | Doping depth | m | 1.55e-07 |
| ***Tunnelling Parameters*** | | | |
| AIGBACC | Parameter for Igb | $(Fs^2/g)^{1/2}/m$ | 0.0136 |

Table 2.81: BSIM4 Device Model Parameters

| Parameter | Description | Units | Default |
|---|---|---|---|
| AIGBINV | Parameter for Igb | $(Fs^2/g)^{1/2}/m$ | 0.0111 |
| AIGC | Parameter for Igc | $(Fs^2/g)^{1/2}/m$ | 0.0136 |
| AIGD | Parameter for Igd | $(Fs^2/g)^{1/2}/m$ | 0.0136 |
| AIGS | Parameter for Igs | $(Fs^2/g)^{1/2}/m$ | 0.0136 |
| BIGBACC | Parameter for Igb | $(Fs^2/g)^{1/2}/mV$ | 0.00171 |
| BIGBINV | Parameter for Igb | $(Fs^2/g)^{1/2}/mV$ | 0.000949 |
| BIGC | Parameter for Igc | $(Fs^2/g)^{1/2}/mV$ | 0.00171 |
| BIGD | Parameter for Igd | $(Fs^2/g)^{1/2}/mV$ | 0.00171 |
| BIGS | Parameter for Igs | $(Fs^2/g)^{1/2}/mV$ | 0.00171 |
| CIGBACC | Parameter for Igb | $V^{-1}$ | 0.075 |
| CIGBINV | Parameter for Igb | $V^{-1}$ | 0.006 |
| CIGC | Parameter for Igc | $V^{-1}$ | 0.075 |
| CIGD | Parameter for Igd | $V^{-1}$ | 0.075 |
| CIGS | Parameter for Igs | $V^{-1}$ | 0.075 |
| DLCIGD | Delta L for Ig model drain side | m | 0 |
| EIGBINV | Parameter for the Si bandgap for Igbinv | V | 1.1 |
| NIGBACC | Parameter for Igbacc slope | – | 1 |
| NIGBINV | Parameter for Igbinv slope | – | 3 |
| NIGC | Parameter for Igc slope | – | 1 |
| NTOX | Exponent for Tox ratio | – | 1 |
| PIGCD | Parameter for Igc partition | – | 1 |
| POXEDGE | Factor for the gate edge Tox | – | 1 |
| TOXREF | Target tox value | m | 3e-09 |
| VFBSDOFF | S/D flatband voltage offset | V | 0 |
| ***Asymmetric and Bias-Dependent $R_{ds}$ Parameters*** | | | |
| PRWB | Body-effect on parasitic resistance | $V^{-1}$ | 0 |
| PRWG | Gate-bias effect on parasitic resistance | $V^{-1}$ | 1 |
| RDSW | Source-drain resistance per width | $\Omega\ \mu$m | 200 |
| RDSWMIN | Source-drain resistance per width at high Vg | $\Omega\ \mu$m | 0 |
| RDW | Drain resistance per width | $\Omega\ \mu$m | 100 |
| RDWMIN | Drain resistance per width at high Vg | $\Omega\ \mu$m | 0 |
| RSW | Source resistance per width | $\Omega\ \mu$m | 100 |
| RSWMIN | Source resistance per width at high Vg | $\Omega\ \mu$m | 0 |
| WR | Width dependence of rds | – | 1 |
| ***Impact Ionization Current Parameters*** | | | |

Table 2.81: BSIM4 Device Model Parameters

| Parameter | Description | Units | Default |
|---|---|---|---|
| ALPHA0 | substrate current model parameter | m/V | 0 |
| ALPHA1 | substrate current model parameter | $V^{-1}$ | 0 |
| BETA0 | substrate current model parameter | $V^{-1}$ | 0 |
| ***Gate-induced Drain Leakage Model Parameters*** | | | |
| AGIDL | Pre-exponential constant for GIDL | $\Omega^{-1}$ | 0 |
| AGISL | Pre-exponential constant for GISL | $\Omega^{-1}$ | 0 |
| BGIDL | Exponential constant for GIDL | V/m | 2.3e+09 |
| BGISL | Exponential constant for GISL | V/m | 2.3e-09 |
| CGIDL | Parameter for body-bias dependence of GIDL | $V^3$ | 0.5 |
| CGISL | Parameter for body-bias dependence of GISL | $V^3$ | 0.5 |
| EGIDL | Fitting parameter for Bandbending | V | 0.8 |
| EGISL | Fitting parameter for Bandbending | V | 0.8 |

## Level 18 MOSFET Tables (VDMOS)

The vertical double-diffused power MOSFET model is based on the uniform charge control model (UCCM) developed at Rensselaer Polytechnic Institute [11]. The VDMOS current-voltage characteristics are described by a single, continuous analytical expression for all regimes of operation. The physics-based model includes effects such as velocity saturation in the channel, drain induced barrier lowering, finite output conductance in saturation, the quasi-saturation effect through a bias dependent drain parasitic resistance, effects of bulk charge, and bias dependent low-field mobility. An important feature of the implementation is the utilization of a single continuous expression for the drain current, which is valid below and above threshold, effectively removing discontinuities and improving convergence properties.

The following tables give parameters for the level 18 MOSFET.

Table 2.82: Power MOSFET Device Instance Parameters

| Parameter | Description | Units | Default |
|---|---|---|---|
| AD | Drain diffusion area | $m^2$ | 0 |
| AS | Source diffusion area | $m^2$ | 0 |
| L | Channel length | m | 0 |
| M | Multiplier for M devices connected in parallel | – | 1 |
| NRD | Multiplier for RSH to yield parasitic resistance of drain | □ | 1 |
| NRS | Multiplier for RSH to yield parasitic resistance of source | □ | 1 |
| PD | Drain diffusion perimeter | m | 0 |
| PS | Source diffusion perimeter | m | 0 |
| TEMP | Device temperature | °C | Ambient Temperature |
| W | Channel width | m | 0 |

Table 2.83: Power MOSFET Device Model Parameters

| Parameter | Description | Units | Default |
|---|---|---|---|
| AI | | – | 2e+09 |
| ALPHA | Parameter accounting for the threshold dependence on the channel potential | – | 0 |
| ARTD | | – | 0 |
| BI | | – | 8e+08 |
| BRTD | | – | 0.035 |
| CBD | Zero-bias bulk-drain p-n capacitance | F | 0 |
| CBS | Zero-bias bulk-source p-n capacitance | F | 0 |

Table 2.83: Power MOSFET Device Model Parameters

| Parameter | Description | Units | Default |
|---|---|---|---|
| CGBO | Gate-bulk overlap capacitance/channel length | F/m | 0 |
| CGDO | Gate-drain overlap capacitance/channel width | F/m | 0 |
| CGSO | Gate-source overlap capacitance/channel width | F/m | 0 |
| CJ | Bulk p-n zero-bias bottom capacitance/area | $F/m^2$ | 0 |
| CJSW | Bulk p-n zero-bias sidewall capacitance/area | $F/m^2$ | 0 |
| CRTD | | – | 0.1472 |
| CV | Charge model storage selector | – | 1 |
| CVE | Meyer-like capacitor model selector | – | 1 |
| D1AF | Drain-source diode flicker noise exponent | – | 1 |
| D1BV | Drain-source diode reverse breakdown voltage | V | 1e+99 |
| D1CJO | Drain-source diode junction capacitance | F | 0 |
| D1EG | Drain-source diode activation energy | eV | 1.11 |
| D1FC | Drain-source diode forward bias depletion capacitance | – | 0.5 |
| D1IBV | Drain-source diode current at breakdown voltage | A | 0.001 |
| D1IKF | Drain-source diode high injection knee currrent | A | 0 |
| D1IS | Drain-Source diode saturation current | A | 1e-14 |
| D1ISR | Drain-source diode recombination saturation current | A | 0 |
| D1KF | Drain-source diode flicker noise coefficient | – | 0 |
| D1M | Drain-source diode grading coefficient | – | 0.5 |
| D1N | Drain-source diode emission coefficient | – | 1 |
| D1NR | Drain-source diode recombination emission coefficient | – | 2 |
| D1RS | Drain-source diode ohmic resistance | Ω | 0 |
| D1TNOM | Drain-source diode nominal temperature | °C | 300.15 |
| D1TT | Drain-source diode transit time | s | 0 |
| D1VJ | Drain-source diode junction potential | V | 1 |
| D1XTI | Drain-source diode sat. current temperature exponent | – | 3 |
| DELMAX | | – | 0.9 |
| DELTA | Transition width parameter | – | 5 |
| DRIFTPARAMA | Drift region resistance intercept parameter | Ω | 0.08 |
| DRIFTPARAMB | Drift region resistance slope parameter | $\Omega\ V^{-1}$ | 0.013 |
| DRTD | | – | 0.0052 |
| ETA | Subthreshold ideality factor | – | 1.32 |

Table 2.83: Power MOSFET Device Model Parameters

| Parameter | Description | Units | Default |
|---|---|---|---|
| FC | Coefficient for forward-bias depletion capacitance formula | – | 0.5 |
| FPE | Charge partitioning scheme selector | – | 1 |
| GAMMAL0 | Body effect constant in front of linear term | – | 0 |
| GAMMAS0 | Body effect constant in front of square root term | $V^{-1/2}$ | 0.5 |
| IS | Bulk p-n saturation current | A | 1e-14 |
| ISUBMOD | | – | 0 |
| JS | Bulk p-n saturation current density | $A/m^2$ | 0 |
| K | | – | 0 |
| KVS | | – | 0 |
| KVT | | – | 0 |
| L0 | Gate length of nominal device | m | 0 |
| LAMBDA | Output conductance parameter | $V^{-1}$ | 0.048 |
| LD | Lateral diffusion length | m | 0 |
| LGAMMAL | Sensitivity of gL on device length | – | 0 |
| LGAMMAS | Sensitivity of gS on device length | $V^{-1/2}$ | 0 |
| LS | | – | 3.5e-08 |
| M | Knee shape parameter | – | 4 |
| MC | | – | 3 |
| MCV | Transition width parameter used by the charge partitioning scheme | – | 10 |
| MD | | – | 2 |
| MDTEMP | | – | 0 |
| MJ | Bulk p-n bottom grading coefficient | – | 0.5 |
| MJSW | Bulk p-n sidewall grading coefficient | – | 0.5 |
| MTH | | – | 0 |
| N2 | | – | 1 |
| NRTD | | – | 0.115 |
| NSS | Surface state density | $cm^{-2}$ | 0 |
| NSUB | Substrate doping density | $cm^{-3}$ | 0 |
| PB | Bulk p-n bottom potential | V | 0.8 |
| PHI | Surface potential | V | 0.6 |
| RD | Drain ohmic resistance | Ω | 0 |
| RDSSHUNT | Drain-source shunt resistance | Ω | 0 |
| RG | Gate ohmic resistance | Ω | 0 |

Table 2.83: Power MOSFET Device Model Parameters

| Parameter | Description | Units | Default |
|---|---|---|---|
| RS | Source ohmic resistance | Ω | 0 |
| RSH | Drain,source diffusion sheet resistance | Ω | 0 |
| RSUB | | – | 0 |
| SIGMA0 | DIBL parameter | – | 0.048 |
| TEMPMODEL | Specifies the type of parameter interpolation over temperature | – | 'NONE' |
| THETA | Mobility degradation parameter | m/V | 0 |
| TNOM | Nominal device temperature | °C | Ambient Tempera-ture |
| TOX | Gate oxide thickness | m | 1e-07 |
| TPG | Gate material type (-1 = same as substrate, 0 = aluminum,1 = opposite of substrate) | – | 1 |
| TS | | – | 0 |
| TVS | | – | 0 |
| U0 | Surface mobility | 1/(Vcm$^2$s) | 280 |
| UO | Surface mobility | 1/(Vcm$^2$s) | 280 |
| VFB | Flat band voltage | V | 0 |
| VMAX | Maximum drift velocity for carriers | m/s | 40000 |
| VP | | – | 0 |
| VSIGMA | DIBL parameter | V | 0.2 |
| VSIGMAT | DIBL parameter | V | 1.7 |
| VTO | Zero-bias threshold voltage | V | 0 |
| WO | Gate width of nominal device | m | 0 |
| WGAMMAL | Sensitivity of gL on device width | – | 0 |
| WGAMMAS | Sensitivity of gS on device width | $V^{-1/2}$ | 0 |
| XJ | Metallurgical junction depth | m | 0 |
| XQC | Charge partitioning factor | – | 0.6 |

## Level 77 MOSFET Tables (BSIM6 version 6.1.1)

**Xyce** includes the BSIM6 MOSFET model, version 6.1.1. Full documentation of the BSIM6 is available at its web site, `http://bsim.berkeley.edu/models/bsim6/`. Instance and model parameters for the BSIM6 are given in tables 2.84 and 2.85. These tables are generated directly from information present in the original Verilog-A implementation of the BSIM6, and lack many descriptions for the parameters. Consult the BSIM6 technical manual from the BSIM group for further details about these parameters.

Table 2.84: BSIM6 Device Instance Parameters

| Parameter | Description | Units | Default |
|---|---|---|---|
| AD | Drain to Substrate Junction Area | — | 0 |
| AS | Source to Substrate Junction Area | — | 0 |
| GEOMOD | Geo dependent parasitics model | — | 0 |
| L | | m | 1e-05 |
| MINZ | Minimize either D or S | — | 0 |
| NF | Number of fingers | — | 1 |
| NGCON | Number of gate contacts | — | 1 |
| NRD | Number of squares in drain | — | 1 |
| NRS | Number of squares in source | — | 1 |
| PD | Drain to Substrate Junction Perimeter | — | 0 |
| PS | Source to Substrate Junction Perimeter | — | 0 |
| RBDB | Resistance between bNode and dbNode | — | 50 |
| RBODYMOD | Distributed body R model | — | 0 |
| RBPB | Resistance between bNodePrime and bNode | — | 50 |
| RBPD | Resistance between bNodePrime and bNode | — | 50 |
| RBPS | Resistance between bNodePrime and sbNode | — | 50 |
| RBSB | Resistance between bNode and sbNode | — | 50 |
| RGATEMOD | Gate resistance model selector | — | 0 |
| RGEOMOD | Geometry-dependent source/drain resistance, 0: RSH-based, 1: Holistic | — | 0 |
| SA | Distance between OD edge from Poly from one side | — | 0 |
| SB | Distance between OD edge from Poly from other side | — | 0 |
| SC | Distance to a single well edge if ¡=0.0, turn off WPE | — | 0 |
| SCA | | — | 0 |
| SCB | | — | 0 |
| SCC | | — | 0 |

Table 2.84: BSIM6 Device Instance Parameters

| Parameter | Description | Units | Default |
|---|---|---|---|
| SD | Distance between neighboring fingers | — | 0 |
| VFBSDOFF | | — | 0 |
| W | Total width including fingers | m | 1e-05 |
| XGW | Dist from gate contact center to dev edge [m] | m | 0 |

Table 2.85: BSIM6 Device Model Parameters

| Parameter | Description | Units | Default |
|---|---|---|---|
| A1 | Non-saturation effect parameter for strong inversion region | — | 0 |
| A11 | Temperature dependence of A1 | — | 0 |
| A2 | Non-saturation effect parameter for moderate inversion region | — | 0 |
| A21 | Temperature dependence of A2 | — | 0 |
| ADOS | Quantum mechanical effect prefactor cum switch in inversion | — | 0 |
| AGIDL | pre-exponential coeff. for GIDL in mho | — | 0 |
| AGIDLL | Length dependence coefficient of AGIDL | — | 0 |
| AGIDLW | Width dependence coefficient of AGIDL | — | 0 |
| AGISL | pre-exponential coeff. for GISL | — | 0 |
| AGISLL | Length dependence coefficient of AGISL | — | 0 |
| AGISLW | Width dependence coefficient of AGISL | — | 0 |
| AIGBACC | Parameter for Igb | — | 0.0136 |
| AIGBINV | Parameter for Igb | — | 0.0111 |
| AIGC | Parameter for Igc | — | 0 |
| AIGCL | Length dependence coefficient of AIGC | — | 0 |
| AIGCW | Width dependence coefficient of AIGC | — | 0 |
| AIGD | Parameter for Igs d | — | 0 |
| AIGDL | Length dependence coefficient of AIGD | — | 0 |
| AIGDW | Width dependence coefficient of AIGD | — | 0 |
| AIGS | Parameter for Igs d | — | 0 |
| AIGSL | Length dependence coefficient of AIGS | — | 0 |
| AIGSW | Width dependence coefficient of AIGS | — | 0 |
| ALPHA0 | first parameter of Iii, m/V | — | 0 |
| ALPHA0L | Length dependence coefficient of ALPHA0 | — | 0 |
| ALPHA0LEXP | Length dependence exponent coefficient of ALPHA0 | — | 1 |

Table 2.85: BSIM6 Device Model Parameters

| Parameter | Description | Units | Default |
|---|---|---|---|
| ASYMMOD | 0: Asymmetry Model turned off - forward mode parameters used, 1: Asymmetry Model turned on | — | 0 |
| AT | Temperature coefficient for saturation velocity | — | -0.00156 |
| ATL | Length Scaling parameter for AT | — | 0 |
| BDOS | Charge centroid parameter - slope of CV curve under QME in inversion | — | 1 |
| BETA0 | Vds dependent parameter of Iii, 1/V | — | 0 |
| BG0SUB | Band gap of substrate at 300.15K | — | 1.17 |
| BGIDL | exponential coeff. for GIDL in | — | 2.3e+09 |
| BGISL | exponential coeff. for GISL | — | 0 |
| BIGBACC | Parameter for Igb | — | 0.00171 |
| BIGBINV | Parameter for Igb | — | 0.000949 |
| BIGC | Parameter for Igc | — | 0 |
| BIGD | Parameter for Igs d | — | 0 |
| BIGS | Parameter for Igs d | — | 0 |
| BINUNIT | Unit of L and W for Binning, 1 : micro-meter, 0 : default | — | 1 |
| BVD | Drain diode breakdown voltage | — | 0 |
| BVS | Source diode breakdown voltage | — | 10 |
| CDSCB | body-bias sensitivity of sub-threshold slope | — | 0 |
| CDSCBEDGE | | — | 0 |
| CDSCBL | Length dependence coefficient of CDSCB | — | 0 |
| CDSCBLEXP | Length dependence exponent coefficient of CDSCB | — | 1 |
| CDSCD | drain-bias sensitivity of sub-threshold slope | — | 1e-09 |
| CDSCDEDGE | | — | 0 |
| CDSCDL | Length dependence coefficient of CDSCD | — | 0 |
| CDSCDLEXP | Length dependence exponent coefficient of CDSCD | — | 1 |
| CDSCDLR | Length dependence coefficient of CDSCD | — | 0 |
| CDSCDR | drain-bias sensitivity of sub-threshold slope | — | 0 |
| CF | Outer Fringe Cap | F | 0 |
| CFRCOEFF | Coefficient for Outer Fringe Cap | — | 1 |
| CGBO | Gate - Body overlap capacitance | — | 0 |
| CGDL | | — | 0 |
| CGDO | Gate - Drain overlap capacitance | — | 0 |

Table 2.85: BSIM6 Device Model Parameters

| Parameter | Description | Units | Default |
|---|---|---|---|
| CGIDL | exponential coeff. for GIDL in V/m | — | 0.5 |
| CGISL | exponential coeff. for GISL | — | 0 |
| CGSL | | — | 0 |
| CGSO | Gate - Source overlap capacitance | — | 0 |
| CIGBACC | Parameter for Igb | — | 0.075 |
| CIGBINV | Parameter for Igb | — | 0.006 |
| CIGC | Parameter for Igc | — | 0 |
| CIGD | Parameter for Igs d | — | 0 |
| CIGS | Parameter for Igs d | — | 0 |
| CIT | parameter for interface trap | — | 0 |
| CITEDGE | | — | 0 |
| CJD | Unit area drain-side junction capacitance at zero bias | — | 0 |
| CJS | Unit area source-side junction capacitance at zero bias | — | 0.0005 |
| CJSWD | Unit length drain-side sidewall junction capacitance at zero bias | — | 0 |
| CJSWGD | Unit length drain-side gate sidewall junction capacitance at zero bias | — | 0 |
| CJSWGS | Unit length source-side gate sidewall junction capacitance at zero bias | — | 0 |
| CJSWS | Unit length source-side sidewall junction capacitance at zero bias | — | 5e-10 |
| CKAPPAD | | — | 0.6 |
| CKAPPAS | | — | 0.6 |
| COVMOD | 0: Use Bias-independent Overlap Capacitances, 1: Use Bias-dependent Overlap Capacitances | — | 0 |
| CTH0 | Thermal capacitance | — | 1e-05 |
| CVMOD | 0: Consistent IV-CV, 1: Different IV-CV | — | 0 |
| DELTA | Smoothing function factor for Vdsat | — | 0.125 |
| DELTAL | Length dependence coefficient of DELTA | — | 0 |
| DELTALEXP | Length dependence exponent coefficient of DELTA | — | 1 |
| DELVT0 | | — | 0 |
| DGAMMAEDGE | | — | 0 |
| DGAMMAEDGEL | | — | 0 |
| DGAMMAEDGELEXP | | — | 1 |

Table 2.85: BSIM6 Device Model Parameters

| Parameter | Description | Units | Default |
|---|---|---|---|
| DLBIN | | — | 0 |
| DLC | delta L for CV | — | 0 |
| DLCIG | Delta L for Ig model [m] | m | 0 |
| DLCIGD | Delta L for Ig model [m] | m | 0 |
| DMCG | Distance of Mid-Contact to Gate edge | m | 0 |
| DMCGT | Dist of Mid-Contact to Gate edge in Test | m | 0 |
| DMCI | Distance of Mid-Contact to Isolation | m | 0 |
| DMDG | Distance of Mid-Diffusion to Gate edge | m | 0 |
| DSUB | Length scaling exponent for DIBL | — | 1 |
| DTEMP | Offset of Device Temperature | — | 0 |
| DTOX | Difference between effective dielectric thickness | — | 0 |
| DVT0EDGE | | — | 2.2 |
| DVT1EDGE | | — | 0.53 |
| DVT2EDGE | Body-bias coefficient for SCE effect for Edge FET | — | 0 |
| DVTEDGE | Vth shift for Edge FET | — | 0 |
| DVTP0 | DITS | — | 0 |
| DVTP1 | DITS | — | 0 |
| DVTP2 | DITS | — | 0 |
| DVTP3 | DITS | — | 0 |
| DVTP4 | DITS | — | 0 |
| DVTP5 | DITS | — | 0 |
| DWBIN | | — | 0 |
| DWC | delta W for CV | — | 0 |
| DWJ | delta W for S/D junctions | — | 0 |
| EASUB | Electron affinity of substrate | — | 4.05 |
| EDGEFET | 0: Edge FET Model Off, 1: Edge FET Model ON | — | 1 |
| EF | Flicker Noise frequency exponent | — | 1 |
| EGIDL | band bending parameter for GIDL | — | 0.8 |
| EGISL | band bending parameter for GISL | — | 0 |
| EIGBINV | Parm for the Si bandgap for Igbinv | — | 1.1 |
| EM | | — | 4.1e+07 |
| EPSROX | Relative dielectric constant of the gate dielectric | — | 3.9 |
| EPSRSUB | Relative dielectric constant of the channel material | — | 11.9 |

Table 2.85: BSIM6 Device Model Parameters

| Parameter | Description | Units | Default |
|---|---|---|---|
| ETA0 | DIBL coefficient | — | 0.08 |
| ETA0EDGE | | — | 0 |
| ETA0R | DIBL coefficient | — | 0 |
| ETAB | Body bias coefficient for subthreshold DIBL effect | — | -0.07 |
| ETABEDGE | | — | 0 |
| ETABEXP | Exponent coefficient of ETAB | — | 1 |
| ETAMOB | Effective field parameter (should be kept close to 1) | — | 1 |
| ETAQM | Bulk charge coefficient for charge centroid in inversion | — | 0.54 |
| EU | Mobility reduction exponent | — | 1.5 |
| EUL | Length dependence coefficient of EU | — | 0 |
| EULEXP | Length dependence exponent coefficient of EU | — | 1 |
| EUW | Width dependence coefficient of EU | — | 0 |
| EUWEXP | Width dependence exponent coefficient of EU | — | 1 |
| EUWL | Width-Length dependence coefficient of EU | — | 0 |
| EUWLEXP | Width-Length dependence coefficient of EU | — | 1 |
| FPROUT | | — | 0 |
| FPROUTL | Length dependence coefficient of FPROUT | — | 0 |
| FPROUTLEXP | Length dependence exponent coefficient of FPROUT | — | 1 |
| GBMIN | Minimum body conductance | — | 1e-12 |
| GEOMOD | Geo dependent parasitics model | — | 0 |
| GIDLMOD | 0: Turn off GIDL Current, 1: Turn on GIDL Current | — | 0 |
| IGBMOD | 0: Turn off Igb, 1: Turn on Igb | — | 0 |
| IGCMOD | 0: Turn off Igc, Igs and Igd, 1: Turn on Igc, Igs and Igd | — | 0 |
| IGT | Gate Current Temperature Dependence | — | 2.5 |
| IIT | Temperature coefficient for BETA0 | — | 0 |
| IJTHDFWD | Forward drain diode breakdown limiting current | — | 0 |
| IJTHDREV | Reverse drain diode breakdown limiting current | — | 0 |
| IJTHSFWD | Forward source diode breakdown limiting current | — | 0.1 |
| IJTHSREV | Reverse source diode breakdown limiting current | — | 0.1 |
| JSD | Bottom drain junction reverse saturation current density | — | 0 |

Table 2.85: BSIM6 Device Model Parameters

| Parameter | Description | Units | Default |
|---|---|---|---|
| JSS | Bottom source junction reverse saturation current density | — | 0.0001 |
| JSWD | Unit length reverse saturation current for sidewall drain junction | — | 0 |
| JSWGD | Unit length reverse saturation current for gate-edge sidewall drain junction | — | 0 |
| JSWGS | Unit length reverse saturation current for gate-edge sidewall source junction | — | 0 |
| JSWS | Unit length reverse saturation current for sidewall source junction | — | 0 |
| JTSD | Bottom drain junction trap-assisted saturation current density | — | 0 |
| JTSS | Bottom source junction trap-assisted saturation current density | — | 0 |
| JTSSWD | Unit length trap-assisted saturation current for sidewall drain junction | — | 0 |
| JTSSWGD | Unit length trap-assisted saturation current for gate-edge sidewall drain junction | — | 0 |
| JTSSWGS | Unit length trap-assisted saturation current for gate-edge sidewall source junction | — | 0 |
| JTSSWS | Unit length trap-assisted saturation current for sidewall source junction | — | 0 |
| JTWEFF | Trap assisted tunneling current width dependence | — | 0 |
| K1 | First-order body-bias Vth shift due to Vertical Non-uniform doping | — | 0 |
| K1L | Length dependence coefficient of K1 | — | 0 |
| K1LEXP | Length dependence exponent coefficient of K1 | — | 1 |
| K1W | Width dependence coefficient of K1 | — | 0 |
| K1WEXP | Width dependence exponent coefficient of K1 | — | 1 |
| K1WL | Width-Length dependence coefficient of K1 | — | 0 |
| K1WLEXP | Width-Length dependence exponent coefficient of K1 | — | 1 |
| K2 | Vth shift due to Vertical Non-uniform doping | — | 0 |
| K2L | Length dependence coefficient of K2 | — | 0 |
| K2LEXP | Length dependence exponent coefficient of K2 | — | 1 |
| K2W | Width dependence coefficient of K2 | — | 0 |
| K2WE | | — | 0 |
| K2WEXP | Width dependence exponent coefficient of K2 | — | 1 |

Table 2.85: BSIM6 Device Model Parameters

| Parameter | Description | Units | Default |
|---|---|---|---|
| K2WL | Width-Length dependence coefficient of K2 | — | 0 |
| K2WLEXP | Width-Length dependence exponent coefficient of K2 | — | 1 |
| KT1 | Temperature coefficient for Vth | — | -0.11 |
| KT1EDGE | | — | 0 |
| KT1EXP | Temperature coefficient for Vth | — | 1 |
| KT1EXPEDGE | | — | 0 |
| KT1L | Temperature coefficient for Vth | — | 0 |
| KT1LEDGE | | — | 0 |
| KT2 | Temperature coefficient for Vth | — | 0.022 |
| KT2EDGE | | — | 0 |
| KU0 | Mobility degradation/enhancement Parameter for Stress Effect | — | 0 |
| KU0WE | | — | 0 |
| KVSAT | Saturation Velocity degradation/enhancement Parameter for Stress Effect | — | 0 |
| KVTH0 | Threshold Shift parameter for stress effect | — | 0 |
| KVTH0WE | | — | 0 |
| L | | m | 1e-05 |
| LA1 | | — | 0 |
| LA11 | | — | 0 |
| LA2 | | — | 0 |
| LA21 | | — | 0 |
| LAGIDL | | — | 0 |
| LAGISL | | — | 0 |
| LAIGBACC | | — | 0 |
| LAIGBINV | | — | 0 |
| LAIGC | | — | 0 |
| LAIGD | | — | 0 |
| LAIGS | | — | 0 |
| LALPHA0 | | — | 0 |
| LAT | | — | 0 |
| LBETA0 | | — | 0 |
| LBGIDL | | — | 0 |
| LBGISL | | — | 0 |
| LBIGBACC | | — | 0 |

Table 2.85: BSIM6 Device Model Parameters

| Parameter | Description | Units | Default |
|---|---|---|---|
| LBIGBINV | | — | 0 |
| LBIGC | | — | 0 |
| LBIGD | | — | 0 |
| LBIGS | | — | 0 |
| LCDSCB | | — | 0 |
| LCDSCD | | — | 0 |
| LCDSCDR | | — | 0 |
| LCF | | F | 0 |
| LCGDL | | — | 0 |
| LCGIDL | | — | 0 |
| LCGISL | | — | 0 |
| LCGSL | | — | 0 |
| LCIGBACC | | — | 0 |
| LCIGBINV | | — | 0 |
| LCIGC | | — | 0 |
| LCIGD | | — | 0 |
| LCIGS | | — | 0 |
| LCIT | | — | 0 |
| LCKAPPAD | | — | 0 |
| LCKAPPAS | | — | 0 |
| LDELTA | | — | 0 |
| LDLCIG | | — | 0 |
| LDLCIGD | | — | 0 |
| LDVTP0 | | — | 0 |
| LDVTP1 | | — | 0 |
| LDVTP2 | | — | 0 |
| LDVTP3 | | — | 0 |
| LDVTP4 | | — | 0 |
| LDVTP5 | | — | 0 |
| LEGIDL | | — | 0 |
| LEGISL | | — | 0 |
| LEIGBINV | | — | 0 |
| LETA0 | | — | 0 |
| LETA0R | | — | 0 |
| LETAB | | — | 0 |

Table 2.85: BSIM6 Device Model Parameters

| Parameter | Description | Units | Default |
|---|---|---|---|
| LEU | | — | 0 |
| LFPROUT | | — | 0 |
| LIGT | | — | 0 |
| LIIT | | — | 0 |
| LINT | delta L for IV | — | 0 |
| LINTNOI | | — | 0 |
| LK1 | | — | 0 |
| LK2 | | — | 0 |
| LK2WE | | — | 0 |
| LKT1 | | — | 0 |
| LKT2 | | — | 0 |
| LKU0 | Length Dependence of KU0 | — | 0 |
| LKU0WE | | — | 0 |
| LKVTH0 | Length dependence of KVTH0 | — | 0 |
| LKVTH0WE | | — | 0 |
| LL | | — | 0 |
| LLC | | — | 0 |
| LLN | | — | 1 |
| LLODKU0 | Length Parameter for u0 stress effect | — | 0 |
| LLODVTH | Length Parameter for Vth stress effect | — | 0 |
| LLONG | L of extracted Long channel device | m | 1e-05 |
| LMLT | Length Shrinking Parameter | — | 1 |
| LNDEP | | — | 0 |
| LNDEPCV | | — | 0 |
| LNFACTOR | | — | 0 |
| LNGATE | | — | 0 |
| LNIGBACC | | — | 0 |
| LNIGBINV | | — | 0 |
| LNSD | | — | 0 |
| LNTOX | | — | 0 |
| LODETA0 | eta0 modification foator for stress effect | — | 0 |
| LODK2 | K2 shift modification factor for stress effect | — | 0 |
| LP1 | Mobility channel length exponential coefficent | — | 1e-08 |
| LP2 | Mobility channel length exponential coefficent | — | 1e-08 |
| LPCLM | | — | 0 |

Table 2.85: BSIM6 Device Model Parameters

| Parameter | Description | Units | Default |
|---|---|---|---|
| LPCLMCV | | — | 0 |
| LPCLMR | | — | 0 |
| LPDIBLC | | — | 0 |
| LPDIBLCB | | — | 0 |
| LPDIBLCR | | — | 0 |
| LPDITS | | — | 0 |
| LPDITSD | | — | 0 |
| LPHIN | | — | 0 |
| LPOXEDGE | | — | 0 |
| LPRT | | — | 0 |
| LPRWB | | — | 0 |
| LPRWG | | — | 0 |
| LPSAT | | — | 0 |
| LPSATB | | — | 0 |
| LPSATR | | — | 0 |
| LPSCBE1 | | — | 0 |
| LPSCBE2 | | — | 0 |
| LPTWG | | — | 0 |
| LPTWGR | | — | 0 |
| LPTWGT | | — | 0 |
| LPVAG | | — | 0 |
| LRDSW | | — | 0 |
| LRDSWMIN | | — | 0 |
| LRDW | | — | 0 |
| LRDWMIN | | — | 0 |
| LRSW | | — | 0 |
| LRSWMIN | | — | 0 |
| LTGIDL | | — | 0 |
| LU0 | | — | 0 |
| LU0R | | — | 0 |
| LUA | | — | 0 |
| LUA1 | | — | 0 |
| LUAR | | — | 0 |
| LUC | | — | 0 |
| LUC1 | | — | 0 |

Table 2.85: BSIM6 Device Model Parameters

| Parameter | Description | Units | Default |
|---|---|---|---|
| LUCR | | — | 0 |
| LUCS | | — | 0 |
| LUCSR | | — | 0 |
| LUCSTE | | — | 0 |
| LUD | | — | 0 |
| LUD1 | | — | 0 |
| LUDR | | — | 0 |
| LUTE | | — | 0 |
| LVFB | | — | 0 |
| LVFBCV | | — | 0 |
| LVSAT | | — | 0 |
| LVSATCV | | — | 0 |
| LVSATR | | — | 0 |
| LW | | — | 0 |
| LWC | | — | 0 |
| LWL | | — | 0 |
| LWLC | | — | 0 |
| LWN | | — | 1 |
| LWR | | — | 0 |
| LXJ | | — | 0 |
| MJD | Drain bottom junction capacitance grading coefficient | — | 0 |
| MJS | Source bottom junction capacitance grading coefficient | — | 0.5 |
| MJSWD | Drain sidewall junction capacitance grading coefficient | — | 0 |
| MJSWGD | Drain-side gate sidewall junction capacitance grading coefficient | — | 0 |
| MJSWGS | Source-side gate sidewall junction capacitance grading coefficient | — | 0 |
| MJSWS | Source sidewall junction capacitance grading coefficient | — | 0.33 |
| MOBSCALE | Mobility scaling model, 0: Old Model, 1: New Model | — | 0 |
| MULU0 | | — | 1 |
| NDEP | Channel Doping Concentration for IV | $m^{-3}$ | 1e+24 |
| NDEPCV | Channel Doping Concentration for CV | $m^{-3}$ | 0 |

Table 2.85: BSIM6 Device Model Parameters

| Parameter | Description | Units | Default |
|---|---|---|---|
| NDEPCVL1 | Length dependence coefficient of NDEPCV | — | 0 |
| NDEPCVL2 | Length dependence coefficient of NDEPCV - For Short Channel Devices | — | 0 |
| NDEPCVLEXP1 | Length dependence exponent coefficient of NDEPCV | — | 0 |
| NDEPCVLEXP2 | Length dependence exponent coefficient of NDEPCV | — | 0 |
| NDEPCVW | Width dependence coefficient of NDEPCV | — | 0 |
| NDEPCVWEXP | Width dependence exponent coefficient of NDEPCV | — | 0 |
| NDEPCVWL | Width-Length dependence coefficient of NDEPCV | — | 0 |
| NDEPCVWLEXP | Width-Length dependence exponent coefficient of NDEPCV | — | 0 |
| NDEPL1 | Length dependence coefficient of NDEP | — | 0 |
| NDEPL2 | Length dependence of NDEP - For Short Channel Devices | — | 0 |
| NDEPLEXP1 | Length dependence exponent coefficient of NDEP | — | 1 |
| NDEPLEXP2 | Length dependence exponent coefficient of NDEP | — | 2 |
| NDEPW | Width dependence coefficient of NDEP | — | 0 |
| NDEPWEXP | Width dependence exponent coefficient of NDEP | — | 1 |
| NDEPWL | Width-Length dependence coefficient of NDEP | — | 0 |
| NDEPWLEXP | Width-Length dependence exponent coefficient of NDEP | — | 1 |
| NFACTOR | Sub-threshold slope factor | — | 0 |
| NFACTOREDGE | | — | 0 |
| NFACTORL | Length dependence coefficient of NFACTOR | — | 0 |
| NFACTORLEXP | Length dependence exponent coefficient of NFACTOR | — | 1 |
| NFACTORW | Width dependence coefficient of NFACTOR | — | 0 |
| NFACTORWEXP | Width dependence exponent coefficient of NFACTOR | — | 1 |
| NFACTORWL | Width-Length dependence coefficient of NFACTOR | — | 0 |
| NFACTORWLEXP | Width-Length dependence exponent coefficient of NFACTOR | — | 1 |
| NGATE | Gate Doping Concentration | $m^{-3}$ | 5e+25 |

Table 2.85: BSIM6 Device Model Parameters

| Parameter | Description | Units | Default |
|---|---|---|---|
| NGCON | Number of gate contacts | — | 1 |
| NIOSUB | Intrinsic carrier concentration of the substrate at 300.15K | $m^{-3}$ | 1.1e+16 |
| NIGBACC | Parameter for Igbacc slope | — | 1 |
| NIGBINV | Parameter for Igbinv slope | — | 3 |
| NJD | Drain junction emission coefficient | — | 0 |
| NJS | Source junction emission coefficient | — | 1 |
| NJTS | Non-ideality factor for JTSS | — | 20 |
| NJTSD | Non-ideality factor for JTSD | — | 0 |
| NJTSSW | Non-ideality factor for JTSSWS | — | 20 |
| NJTSSWD | Non-ideality factor for JTSSWD | — | 0 |
| NJTSSWG | Non-ideality factor for JTSSWGS | — | 20 |
| NJTSSWGD | Non-ideality factor for JTSSWGD | — | 0 |
| NOIA | | — | 6.25e+40 |
| NOIB | | — | 3.125e+25 |
| NOIC | | — | 8.75e+08 |
| NSD | S/D Doping Concentration | $m^{-3}$ | 1e+26 |
| NTNOI | | — | 1 |
| NTOX | Exponent for Tox ratio | — | 1 |
| PA1 | | — | 0 |
| PA11 | | — | 0 |
| PA2 | | — | 0 |
| PA21 | | — | 0 |
| PAGIDL | | — | 0 |
| PAGISL | | — | 0 |
| PAIGBACC | | — | 0 |
| PAIGBINV | | — | 0 |
| PAIGC | | — | 0 |
| PAIGD | | — | 0 |
| PAIGS | | — | 0 |
| PALPHA0 | | — | 0 |
| PAT | | — | 0 |
| PBD | Drain-side bulk junction built-in potential | — | 0 |
| PBETA0 | | — | 0 |
| PBGIDL | | — | 0 |

Table 2.85: BSIM6 Device Model Parameters

| Parameter | Description | Units | Default |
|---|---|---|---|
| PBGISL | | — | 0 |
| PBIGBACC | | — | 0 |
| PBIGBINV | | — | 0 |
| PBIGC | | — | 0 |
| PBIGD | | — | 0 |
| PBIGS | | — | 0 |
| PBS | Source-side bulk junction built-in potential | — | 1 |
| PBSWD | Built-in potential for Drain-side sidewall junction capacitance | — | 0 |
| PBSWGD | Built-in potential for Drain-side gate sidewall junction capacitance | — | 0 |
| PBSWGS | Built-in potential for Source-side gate sidewall junction capacitance | — | 0 |
| PBSWS | Built-in potential for Source-side sidewall junction capacitance | — | 1 |
| PCDSCB | | — | 0 |
| PCDSCD | | — | 0 |
| PCDSCDR | | — | 0 |
| PCF | | F | 0 |
| PCGDL | | — | 0 |
| PCGIDL | | — | 0 |
| PCGISL | | — | 0 |
| PCGSL | | — | 0 |
| PCIGBACC | | — | 0 |
| PCIGBINV | | — | 0 |
| PCIGC | | — | 0 |
| PCIGD | | — | 0 |
| PCIGS | | — | 0 |
| PCIT | | — | 0 |
| PCKAPPAD | | — | 0 |
| PCKAPPAS | | — | 0 |
| PCLM | CLM prefactor | — | 0 |
| PCLMCV | CLM parameter for CV | — | 0 |
| PCLMCVL | | — | 0 |
| PCLMCVLEXP | | — | 0 |
| PCLMG | CLM prefactor gate voltage dependence | — | 0 |

Table 2.85: BSIM6 Device Model Parameters

| Parameter | Description | Units | Default |
|---|---|---|---|
| PCLML | Length dependence coefficient of PCLM | — | 0 |
| PCLMLEXP | Length dependence exponent coefficient of PCLM | — | 1 |
| PCLMR | CLM prefactor | — | 0 |
| PDELTA | | — | 0 |
| PDIBLC | parameter for DIBL effect on Rout | — | 0 |
| PDIBLCB | parameter for DIBL effect on Rout | — | 0 |
| PDIBLCL | Length dependence coefficient of PDIBLC | — | 0 |
| PDIBLCLEXP | Length dependence exponent coefficient of PDIBLC | — | 1 |
| PDIBLCLEXPR | Length dependence exponent coefficient of PDIBLC | — | 0 |
| PDIBLCLR | Length dependence coefficient of PDIBLC | — | 0 |
| PDIBLCR | parameter for DIBL effect on Rout | — | 0 |
| PDITS | Coefficient for drain-induced Vth shifts | — | 0 |
| PDITSD | Vds dep of drain-induced Vth shifts | — | 0 |
| PDITSL | L dep of drain-induced Vth shifts | — | 0 |
| PDLCIG | | — | 0 |
| PDLCIGD | | — | 0 |
| PDVTP0 | | — | 0 |
| PDVTP1 | | — | 0 |
| PDVTP2 | | — | 0 |
| PDVTP3 | | — | 0 |
| PDVTP4 | | — | 0 |
| PDVTP5 | | — | 0 |
| PEGIDL | | — | 0 |
| PEGISL | | — | 0 |
| PEIGBINV | | — | 0 |
| PERMOD | Whether PS/PD (when given) include gate-edge perimeter | — | 1 |
| PETA0 | | — | 0 |
| PETA0R | | — | 0 |
| PETAB | | — | 0 |
| PEU | | — | 0 |
| PFPROUT | | — | 0 |

Table 2.85: BSIM6 Device Model Parameters

| Parameter | Description | Units | Default |
|---|---|---|---|
| PHIN | Nonuniform vertical doping effect on surface potential, V | V | 0.045 |
| PIGCD | Igc, S/D partition parameter | — | 1 |
| PIGCDL | Length dependence coefficient of PIGCD | — | 0 |
| PIGT | | — | 0 |
| PIIT | | — | 0 |
| PK1 | | — | 0 |
| PK2 | | — | 0 |
| PK2WE | | — | 0 |
| PKT1 | | — | 0 |
| PKT2 | | — | 0 |
| PKU0 | Cross Term Dependence of KU0 | — | 0 |
| PKU0WE | | — | 0 |
| PKVTH0 | Cross-term dependence of KVTH0 | — | 0 |
| PKVTH0WE | | — | 0 |
| PNDEP | | — | 0 |
| PNDEPCV | | — | 0 |
| PNFACTOR | | — | 0 |
| PNGATE | | — | 0 |
| PNIGBACC | | — | 0 |
| PNIGBINV | | — | 0 |
| PNSD | | — | 0 |
| PNTOX | | — | 0 |
| POXEDGE | Factor for the gate edge Tox | — | 1 |
| PPCLM | | — | 0 |
| PPCLMCV | | — | 0 |
| PPCLMR | | — | 0 |
| PPDIBLC | | — | 0 |
| PPDIBLCB | | — | 0 |
| PPDIBLCR | | — | 0 |
| PPDITS | | — | 0 |
| PPDITSD | | — | 0 |
| PPHIN | | — | 0 |
| PPOXEDGE | | — | 0 |
| PPRT | | — | 0 |

Table 2.85: BSIM6 Device Model Parameters

| Parameter | Description | Units | Default |
|---|---|---|---|
| PPRWB | | — | 0 |
| PPRWG | | — | 0 |
| PPSAT | | — | 0 |
| PPSATB | | — | 0 |
| PPSATR | | — | 0 |
| PPSCBE1 | | — | 0 |
| PPSCBE2 | | — | 0 |
| PPTWG | | — | 0 |
| PPTWGR | | — | 0 |
| PPTWGT | | — | 0 |
| PPVAG | | — | 0 |
| PRDSW | | — | 0 |
| PRDSWMIN | | — | 0 |
| PRDW | | — | 0 |
| PRDWMIN | | — | 0 |
| PRSW | | — | 0 |
| PRSWMIN | | — | 0 |
| PRT | Temperature coefficient for resistance | — | 0 |
| PRWB | Body bias dependence of resistance | — | 0 |
| PRWBL | Length dependence coefficient of PPRWB | — | 0 |
| PRWBLEXP | Length dependence exponent coefficient of PPRWB | — | 1 |
| PRWG | gate bias dependence of S/D extension resistance | — | 1 |
| PSAT | Gmsat variation with gate bias | — | 1 |
| PSATB | Body bias effect on Idsat | — | 0 |
| PSATL | | — | 0 |
| PSATLEXP | | — | 1 |
| PSATR | Gmsat variation with gate bias | — | 0 |
| PSATX | | — | 1 |
| PSCBE1 | Substrate current body-effect coeff | — | 4.24e+08 |
| PSCBE2 | Substrate current body-effect coeff | — | 1e-08 |
| PTGIDL | | — | 0 |
| PTWG | Idsat variation with gate bias | — | 0 |
| PTWGL | Length dependence coefficient of PTWG | — | 0 |

Table 2.85: BSIM6 Device Model Parameters

| Parameter | Description | Units | Default |
|---|---|---|---|
| PTWGLEXP | Length dependence exponent coefficient of PTWG | — | 1 |
| PTWGLEXPR | Length dependence exponent coefficient of PTWG | — | 0 |
| PTWGLR | Length dependence coefficient of PTWG | — | 0 |
| PTWGR | Idsat variation with gate bias | — | 0 |
| PTWGT | Temperature coefficient for PTWG | — | 0 |
| PTWGTL | Length Scaling parameter for PTWGT | — | 0 |
| PU0 | | — | 0 |
| PU0R | | — | 0 |
| PUA | | — | 0 |
| PUA1 | | — | 0 |
| PUAR | | — | 0 |
| PUC | | — | 0 |
| PUC1 | | — | 0 |
| PUCR | | — | 0 |
| PUCS | | — | 0 |
| PUCSR | | — | 0 |
| PUCSTE | | — | 0 |
| PUD | | — | 0 |
| PUD1 | | — | 0 |
| PUDR | | — | 0 |
| PUTE | | — | 0 |
| PVAG | Vg dependence of early voltage | — | 1 |
| PVFB | | — | 0 |
| PVFBCV | | — | 0 |
| PVSAT | | — | 0 |
| PVSATCV | | — | 0 |
| PVSATR | | — | 0 |
| PWR | | — | 0 |
| PXJ | | — | 0 |
| QM0 | Charge centroid parameter - starting point for QME in inversion | — | 0.001 |
| RBDB | Resistance between bNode and dbNode | — | 50 |
| RBDBX0 | Scaling prefactor for RBDBX | — | 100 |
| RBDBY0 | Scaling prefactor for RBDBY | — | 100 |

Table 2.85: BSIM6 Device Model Parameters

| Parameter | Description | Units | Default |
|---|---|---|---|
| RBODYMOD | Distributed body R model | — | 0 |
| RBPB | Resistance between bNodePrime and bNode | — | 50 |
| RBPBX0 | | — | 100 |
| RBPBXL | Length Scaling parameter for RBPBX | — | 0 |
| RBPBXNF | Number of fingers Scaling parameter for RBPBX | — | 0 |
| RBPBXW | Width Scaling parameter for RBPBX | — | 0 |
| RBPBY0 | Scaling prefactor for RBPBY | — | 100 |
| RBPBYL | Length Scaling parameter for RBPBY | — | 0 |
| RBPBYNF | Number of fingers Scaling parameter for RBPBY | — | 0 |
| RBPBYW | Width Scaling parameter for RBPBY | — | 0 |
| RBPD | Resistance between bNodePrime and bNode | — | 50 |
| RBPD0 | | — | 50 |
| RBPDL | Length Scaling parameter for RBPD | — | 0 |
| RBPDNF | Number of fingers Scaling parameter for RBPD | — | 0 |
| RBPDW | Width Scaling parameter for RBPD | — | 0 |
| RBPS | Resistance between bNodePrime and sbNode | — | 50 |
| RBPS0 | Scaling prefactor for RBPS 50 Ohms | — | 50 |
| RBPSL | | — | 0 |
| RBPSNF | | — | 0 |
| RBPSW | | — | 0 |
| RBSB | Resistance between bNode and sbNode | — | 50 |
| RBSBX0 | Scaling prefactor for RBSBX | — | 100 |
| RBSBY0 | Scaling prefactor for RBSBY | — | 100 |
| RBSDBXL | Length Scaling parameter for RBSBX and RBDBX | — | 0 |
| RBSDBXNF | Number of fingers Scaling parameter for RBSBX and RBDBX | — | 0 |
| RBSDBXW | Width Scaling parameter for RBSBX and RBDBX | — | 0 |
| RBSDBYL | Length Scaling parameter for RBSBY and RBDBY | — | 0 |
| RBSDBYNF | Number of fingers Scaling parameter for RBSBY and RBDBY | — | 0 |
| RBSDBYW | Width Scaling parameter for RBSBY and RBDBY | — | 0 |
| RDSMOD | 0: Internal bias dependent and external bias independent s/d resistance model, 1: External s/d resistance model, 2: Internal s/d resistance model | — | 0 |

Table 2.85: BSIM6 Device Model Parameters

| Parameter | Description | Units | Default |
|---|---|---|---|
| RDSW | zero bias Resistance (RDSMOD=0 and RDSMOD=2) | — | 20 |
| RDSWL | Geometrical scaling of RDSW (RDSMOD=0 and RDSMOD=2) | — | 0 |
| RDSWLEXP | Geometrical scaling of RDSW (RDSMOD=0 and RDSMOD=2) | — | 1 |
| RDSWMIN | S/D Resistance per unit width at high Vgs (RDSMOD=0 and RDSMOD=2) | — | 0 |
| RDW | zero bias Drain Resistance (RDSMOD=1) | — | 0 |
| RDWL | Geometrical scaling of RDW (RDSMOD=1) | — | 0 |
| RDWLEXP | Geometrical scaling of RDW (RDSMOD=1) | — | 0 |
| RDWMIN | Drain Resistance per unit width at high Vgs (RDSMOD=1) | — | 0 |
| RGATEMOD | Gate resistance model selector | — | 0 |
| RGEOMOD | Geometry-dependent source/drain resistance, 0: RSH-based, 1: Holistic | — | 0 |
| RNOIA | TNOIMOD = 1 | — | 0.577 |
| RNOIB | TNOIMOD = 1 | — | 0.5164 |
| RNOIC | TNOIMOD = 1 | — | 0.395 |
| RSH | Source-drain sheet resistance | — | 0 |
| RSHG | Gate sheet resistance | — | 0.1 |
| RSW | zero bias Source Resistance (RDSMOD=1) | — | 10 |
| RSWL | Geometrical scaling of RSW (RDSMOD=1) | — | 0 |
| RSWLEXP | Geometrical scaling of RSW (RDSMOD=1) | — | 1 |
| RSWMIN | Source Resistance per unit width at high Vgs (RDSMOD=1) | — | 0 |
| RTHO | Thermal resistance | — | 0 |
| SA | Distance between OD edge from Poly from one side | — | 0 |
| SAREF | Reference distance between OD edge from Poly from one side | — | 1e-06 |
| SB | Distance between OD edge from Poly from other side | — | 0 |
| SBREF | Reference distance between OD edge from Poly from other side | — | 1e-06 |
| SC | Distance to a single well edge if ¡=0.0, turn off WPE | — | 0 |
| SCA | | — | 0 |
| SCB | | — | 0 |

Table 2.85: BSIM6 Device Model Parameters

| Parameter | Description | Units | Default |
|---|---|---|---|
| SCC | | — | 0 |
| SCREF | | — | 1e-06 |
| SD | Distance between neighboring fingers | — | 0 |
| SHMOD | 0 : Self heating model OFF, 1 : Self heating model ON | — | 0 |
| STETA0 | eta0 shift related to Vth0 change | — | 0 |
| STK2 | K2 shift factor related to Vth change | — | 0 |
| TBGASUB | Bandgap Temperature Coefficient | — | 0.000473 |
| TBGBSUB | Bandgap Temperature Coefficient | — | 636 |
| TCJ | Temperature coefficient for CJS/CJD | — | 0 |
| TCJSW | Temperature coefficient for CJSWS/CJSWD | — | 0 |
| TCJSWG | Temperature coefficient for CJSWGS/CJSWGD | — | 0 |
| TDELTA | Temperature coefficient for DELTA | — | 0 |
| TETA0 | Temperature coefficient for ETA0 | — | 0 |
| TETA0EDGE | | — | 0 |
| TGIDL | Temperature coefficient for GIDL/GISL | — | 0 |
| TKU0 | Temperature Coefficient for KU0 | — | 0 |
| TNFACTOR | Temperature exponent for NFACTOR | — | 0 |
| TNFACTOREDGE | | — | 0 |
| TNJTS | Temperature coefficient for NJTS | — | 0 |
| TNJTSD | Temperature coefficient for NJTSD | — | 0 |
| TNJTSSW | Temperature coefficient for NJTSSW | — | 0 |
| TNJTSSWD | Temperature coefficient for NJTSSWD | — | 0 |
| TNJTSSWG | Temperature coefficient for NJTSSWG | — | 0 |
| TNJTSSWGD | Temperature coefficient for NJTSSWGD | — | 0 |
| TNOIA | TNOIMOD = 1 | — | 0 |
| TNOIB | TNOIMOD = 1 | — | 0 |
| TNOIC | Correlation coefficient | — | 0 |
| TNOIMOD | Thermal noise model selector | — | 0 |
| TNOM | Temperature at which the model was extracted | — | 27 |
| TOXE | Effective gate dielectric thickness relative to SiO2, m | m | 3e-09 |
| TOXP | Physical gate dielectric thickness,If not given, TOXP is calculated from TOXE and DTOX | m | 0 |
| TOXREF | Target tox value | m | 3e-09 |
| TPB | Temperature coefficient for PBS/PBD | — | 0 |

Table 2.85: BSIM6 Device Model Parameters

| Parameter | Description | Units | Default |
|---|---|---|---|
| TPBSW | Temperature coefficient for PBSWS/PBSWD | — | 0 |
| TPBSWG | Temperature coefficient for PBSWGS/PBSWGD | — | 0 |
| TYPE | | — | 1 |
| U0 | | — | 0.067 |
| U0L | Length dependence coefficient of U0L | — | 0 |
| U0LEXP | Length dependence exponent coefficient of U0L | — | 1 |
| U0R | | — | 0 |
| UA | Mobility reduction coefficient | — | 0.001 |
| UA1 | Temperature coefficient for UA | — | 0.001 |
| UA1L | Length Scaling parameter for UA1 | — | 0 |
| UAL | Length dependence coefficient of UA | — | 0 |
| UALEXP | Length dependence exponent coefficient of UA | — | 1 |
| UAR | Mobility reduction coefficient | — | 0 |
| UAW | Width dependence coefficient of UA | — | 0 |
| UAWEXP | Width dependence exponent coefficient of UA | — | 1 |
| UAWL | Width-Length dependence coefficient of UA | — | 0 |
| UAWLEXP | Width-Length dependence coefficient of UA | — | 1 |
| UC | Mobility reduction with body bias | — | 0 |
| UC1 | Temperature coefficient for UC | — | 5.6e-11 |
| UCL | Length dependence coefficient of UC | — | 0 |
| UCLEXP | Length dependence exponent coefficient of UC | — | 1 |
| UCR | Mobility reduction with body bias | — | 0 |
| UCS | Coulombic scattering parameter | — | 2 |
| UCSR | Coulombic scattering parameter | — | 0 |
| UCSTE | Temperature coefficient for UCS | — | -0.004775 |
| UCW | Width dependence coefficient of UC | — | 0 |
| UCWEXP | Width dependence exponent coefficient of UC | — | 1 |
| UCWL | Width-Length dependence coefficient of UC | — | 0 |
| UCWLEXP | Width-Length dependence exponent coefficient of UC | — | 1 |
| UD | Coulombic scattering parameter | — | 0.001 |
| UD1 | Temperature coefficient for UD | — | 0 |
| UD1L | Length Scaling parameter for UD1 | — | 0 |
| UDL | Length dependence coefficient of UD | — | 0 |
| UDLEXP | Length dependence exponent coefficient of UD | — | 1 |

Table 2.85: BSIM6 Device Model Parameters

| Parameter | Description | Units | Default |
|---|---|---|---|
| UDR | Coulombic scattering parameter | — | 0 |
| UP1 | Mobility channel length coefficent | — | 0 |
| UP2 | Mobility channel length coefficent | — | 0 |
| UTE | Mobility temperature exponent | — | -1.5 |
| UTEL | Length Scaling parameter for UTE | — | 0 |
| VFB | Flat band voltage | V | -0.5 |
| VFBCV | Flat band voltage for CV | — | 0 |
| VFBCVL | Length dependence coefficient of VFBCV | — | 0 |
| VFBCVLEXP | Length dependence exponent coefficient of VFBCV | — | 1 |
| VFBCVW | Width dependence coefficient of VFBCV | — | 0 |
| VFBCVWEXP | Width dependence exponent coefficient of VFBCV | — | 1 |
| VFBCVWL | Width-Length dependence coefficient of VFBCV | — | 0 |
| VFBCVWLEXP | Width-Length dependence coefficient of VFBCV | — | 1 |
| VFBSDOFF | | — | 0 |
| VSAT | Saturation Velocity | — | 100000 |
| VSATCV | VSAT parameter for CV | — | 0 |
| VSATCVL | | — | 0 |
| VSATCVLEXP | | — | 0 |
| VSATCVW | | — | 0 |
| VSATCVWEXP | | — | 0 |
| VSATCVWL | | — | 0 |
| VSATCVWLEXP | | — | 0 |
| VSATL | Length dependence coefficient of of VSAT | — | 0 |
| VSATLEXP | Length dependence exponent coefficient of VSAT | — | 1 |
| VSATR | Saturation Velocity | — | 0 |
| VSATW | Width dependence coefficient of of VSAT | — | 0 |
| VSATWEXP | Width dependence exponent coefficient of of VSAT | — | 1 |
| VSATWL | Width-Length dependence coefficient of of VSAT | — | 0 |
| VSATWLEXP | Width-Length dependence exponent coefficient of of VSAT | — | 1 |
| VTSD | Bottom drain junction trap-assisted current voltage dependent parameter | — | 0 |

Table 2.85: BSIM6 Device Model Parameters

| Parameter | Description | Units | Default |
|---|---|---|---|
| VTSS | Bottom source junction trap-assisted current voltage dependent parameter | — | 10 |
| VTSSWD | Unit length trap-assisted current voltage dependent parameter for sidewall drain junction | — | 0 |
| VTSSWGD | Unit length trap-assisted current voltage dependent parameter for gate-edge sidewall drain junction | — | 0 |
| VTSSWGS | Unit length trap-assisted current voltage dependent parameter for gate-edge sidewall source junction | — | 10 |
| VTSSWS | Unit length trap-assisted current voltage dependent parameter for sidewall source junction | — | 10 |
| WA1 | | — | 0 |
| WA11 | | — | 0 |
| WA2 | | — | 0 |
| WA21 | | — | 0 |
| WAGIDL | | — | 0 |
| WAGISL | | — | 0 |
| WAIGBACC | | — | 0 |
| WAIGBINV | | — | 0 |
| WAIGC | | — | 0 |
| WAIGD | | — | 0 |
| WAIGS | | — | 0 |
| WALPHA0 | | — | 0 |
| WAT | | — | 0 |
| WBETA0 | | — | 0 |
| WBGIDL | | — | 0 |
| WBGISL | | — | 0 |
| WBIGBACC | | — | 0 |
| WBIGBINV | | — | 0 |
| WBIGC | | — | 0 |
| WBIGD | | — | 0 |
| WBIGS | | — | 0 |
| WCDSCB | | — | 0 |
| WCDSCD | | — | 0 |
| WCDSCDR | | — | 0 |
| WCF | | F | 0 |

Table 2.85: BSIM6 Device Model Parameters

| Parameter | Description | Units | Default |
|---|---|---|---|
| WCGDL | | — | 0 |
| WCGIDL | | — | 0 |
| WCGISL | | — | 0 |
| WCGSL | | — | 0 |
| WCIGBACC | | — | 0 |
| WCIGBINV | | — | 0 |
| WCIGC | | — | 0 |
| WCIGD | | — | 0 |
| WCIGS | | — | 0 |
| WCIT | | — | 0 |
| WCKAPPAD | | — | 0 |
| WCKAPPAS | | — | 0 |
| WDELTA | | — | 0 |
| WDLCIG | | — | 0 |
| WDLCIGD | | — | 0 |
| WDVTP0 | | — | 0 |
| WDVTP1 | | — | 0 |
| WDVTP2 | | — | 0 |
| WDVTP3 | | — | 0 |
| WDVTP4 | | — | 0 |
| WDVTP5 | | — | 0 |
| WEB | | — | 0 |
| WEC | | — | 0 |
| WEDGE | | — | 1e-08 |
| WEGIDL | | — | 0 |
| WEGISL | | — | 0 |
| WEIGBINV | | — | 0 |
| WETA0 | | — | 0 |
| WETA0R | | — | 0 |
| WETAB | | — | 0 |
| WEU | | — | 0 |
| WFPROUT | | — | 0 |
| WIGT | | — | 0 |
| WIIT | | — | 0 |
| WINT | delta W for IV | — | 0 |

Table 2.85: BSIM6 Device Model Parameters

| Parameter | Description | Units | Default |
|---|---|---|---|
| WK1 | | — | 0 |
| WK2 | | — | 0 |
| WK2WE | | — | 0 |
| WKT1 | | — | 0 |
| WKT2 | | — | 0 |
| WKU0 | Width Dependence of KU0 | — | 0 |
| WKU0WE | | — | 0 |
| WKVTH0 | Width dependence of KVTH0 | — | 0 |
| WKVTH0WE | | — | 0 |
| WL | | — | 0 |
| WLC | | — | 0 |
| WLN | | — | 1 |
| WLOD | Width Parameter for Stress Effect | — | 0 |
| WLODKU0 | Width Parameter for u0 stress effect | — | 0 |
| WLODVTH | Width Parameter for Vth stress effect | — | 0 |
| WMLT | Width Shrinking Parameter | — | 1 |
| WNDEP | | — | 0 |
| WNDEPCV | | — | 0 |
| WNFACTOR | | — | 0 |
| WNGATE | | — | 0 |
| WNIGBACC | | — | 0 |
| WNIGBINV | | — | 0 |
| WNSD | | — | 0 |
| WNTOX | | — | 0 |
| WPCLM | | — | 0 |
| WPCLMCV | | — | 0 |
| WPCLMR | | — | 0 |
| WPDIBLC | | — | 0 |
| WPDIBLCB | | — | 0 |
| WPDIBLCR | | — | 0 |
| WPDITS | | — | 0 |
| WPDITSD | | — | 0 |
| WPEMOD | Model flag | — | 0 |
| WPHIN | | — | 0 |
| WPOXEDGE | | — | 0 |

Table 2.85: BSIM6 Device Model Parameters

| Parameter | Description | Units | Default |
|---|---|---|---|
| WPRT | | — | 0 |
| WPRWB | | — | 0 |
| WPRWG | | — | 0 |
| WPSAT | | — | 0 |
| WPSATB | | — | 0 |
| WPSATR | | — | 0 |
| WPSCBE1 | | — | 0 |
| WPSCBE2 | | — | 0 |
| WPTWG | | — | 0 |
| WPTWGR | | — | 0 |
| WPTWGT | | — | 0 |
| WPVAG | | — | 0 |
| WR | W dependence parameter of S/D extension resistance | — | 1 |
| WRDSW | | — | 0 |
| WRDSWMIN | | — | 0 |
| WRDW | | — | 0 |
| WRDWMIN | | — | 0 |
| WRSW | | — | 0 |
| WRSWMIN | | — | 0 |
| WTGIDL | | — | 0 |
| WTH0 | Width dependence coefficient for Rth and Cth | — | 0 |
| WU0 | | — | 0 |
| WU0R | | — | 0 |
| WUA | | — | 0 |
| WUA1 | | — | 0 |
| WUAR | | — | 0 |
| WUC | | — | 0 |
| WUC1 | | — | 0 |
| WUCR | | — | 0 |
| WUCS | | — | 0 |
| WUCSR | | — | 0 |
| WUCSTE | | — | 0 |
| WUD | | — | 0 |
| WUD1 | | — | 0 |

Table 2.85: BSIM6 Device Model Parameters

| Parameter | Description | Units | Default |
|---|---|---|---|
| WUDR | | — | 0 |
| WUTE | | — | 0 |
| WVFB | | — | 0 |
| WVFBCV | | — | 0 |
| WVSAT | | — | 0 |
| WVSATCV | | — | 0 |
| WVSATR | | — | 0 |
| WW | | — | 0 |
| WWC | | — | 0 |
| WWIDE | W of extracted Wide channel device | m | 1e-05 |
| WWL | | — | 0 |
| WWLC | | — | 0 |
| WWN | | — | 1 |
| WWR | | — | 0 |
| WXJ | | — | 0 |
| XGL | Variation in Ldrawn | m | 0 |
| XGW | Dist from gate contact center to dev edge [m] | m | 0 |
| XJ | S/D junction depth | — | 1.5e-07 |
| XJBVD | Fitting parameter for drain diode breakdown current | — | 0 |
| XJBVS | Fitting parameter for source diode breakdown current | — | 1 |
| XL | L offset for channel length due to mask/etch effect | — | 0 |
| XRCRG1 | 1st fitting parm the bias-dependent Rg //make it binnable | — | 12 |
| XRCRG2 | 2nd fitting parm the bias-dependent Rg //make it binnable | — | 1 |
| XTID | Drain junction current temperature exponent | — | 0 |
| XTIS | Source junction current temperature exponent | — | 3 |
| XTSD | Power dependence of JTSD on temperature | — | 0 |
| XTSS | Power dependence of JTSS on temperature | — | 0.02 |
| XTSSWD | Power dependence of JTSSWD on temperature | — | 0 |
| XTSSWGD | Power dependence of JTSSWGD on temperature | — | 0 |
| XTSSWGS | Power dependence of JTSSWGS on temperature | — | 0.02 |

Table 2.85: BSIM6 Device Model Parameters

| Parameter | Description | Units | Default |
|---|---|---|---|
| XTSSWS | Power dependence of JTSSWS on temperature | — | 0.02 |
| XW | W offset for channel width due to mask/etch effect | — | 0 |

## Level 102 MOSFET Tables (PSP version 102.5)

**Xyce** includes a legacy version of the PSP MOSFET model, version 102.5. This version is provided because the more recent 103 versions are not backward compatible with the older 102 versions, and some foundries provide model cards that use the version 102. Development of new model cards should be done using the more recent, supported versions of PSP.

Table 2.86: PSP102VA legacy MOSFET 102.5 Device Instance Parameters

| Parameter | Description | Units | Default |
|---|---|---|---|
| ABDRAIN | Bottom area of drain junction | – | 1e-12 |
| ABSOURCE | Bottom area of source junction | – | 1e-12 |
| AD | Bottom area of drain junction | – | 1e-12 |
| AS | Bottom area of source junction | – | 1e-12 |
| DELVTO | Threshold voltage shift parameter | – | 0 |
| FACTUO | Zero-field mobility pre-factor | – | 1 |
| L | Design length | – | 1e-05 |
| LGDRAIN | Gate-edge length of drain junction | – | 1e-06 |
| LGSOURCE | Gate-edge length of source junction | – | 1e-06 |
| LSDRAIN | STI-edge length of drain junction | – | 1e-06 |
| LSSOURCE | STI-edge length of source junction | – | 1e-06 |
| M | Alias for MULT | – | 1 |
| MULT | Number of devices in parallel | – | 1 |
| NF | Number of fingers | – | 1 |
| NGCON | Number of gate contacts | – | 1 |
| PD | Perimeter of drain junction | – | 1e-06 |
| PS | Perimeter of source junction | – | 1e-06 |
| SA | Distance between OD-edge and poly from one side | – | 0 |
| SB | Distance between OD-edge and poly from other side | – | 0 |
| SC | Distance between OD-edge and nearest well edge | – | 0 |
| SCA | Integral of the first distribution function for scattered well dopants | – | 0 |
| SCB | Integral of the second distribution function for scattered well dopants | – | 0 |
| SCC | Integral of the third distribution function for scattered well dopants | – | 0 |
| SD | Distance between neighbouring fingers | – | 0 |
| W | Design width | – | 1e-05 |

Table 2.86: PSP102VA legacy MOSFET 102.5 Device Instance Parameters

| Parameter | Description | Units | Default |
|---|---|---|---|
| XGW | Distance from the gate contact to the channel edge | – | 1e-07 |

Table 2.87: PSP102VA legacy MOSFET 102.5 Device Model Parameters

| Parameter | Description | Units | Default |
|---|---|---|---|
| A1L | Length dependence of A1 | – | 0 |
| A1O | Geometry independent impact-ionization pre-factor | – | 1 |
| A1W | Width dependence of A1 | – | 0 |
| A2O | Impact-ionization exponent at TR | – | 10 |
| A3L | Length dependence of A3 | – | 0 |
| A3O | Geometry independent saturation-voltage dependence of II | – | 1 |
| A3W | Width dependence of A3 | – | 0 |
| A4L | Length dependence of A4 | – | 0 |
| A4O | Geometry independent back-bias dependence of II | – | 0 |
| A4W | Width dependence of A4 | – | 0 |
| AGIDLDW | Width dependence of GIDL pre-factor for drain side | – | 0 |
| AGIDLW | Width dependence of GIDL pre-factor | – | 0 |
| ALP1L1 | Length dependence of CLM enhancement factor above threshold | – | 0 |
| ALP1L2 | Second_order length dependence of ALP1 | – | 0 |
| ALP1LEXP | Exponent for length dependence of ALP1 | – | 0.5 |
| ALP1W | Width dependence of ALP1 | – | 0 |
| ALP2L1 | Length dependence of CLM enhancement factor below threshold | – | 0 |
| ALP2L2 | Second_order length dependence of ALP2 | – | 0 |
| ALP2LEXP | Exponent for length dependence of ALP2 | – | 0.5 |
| ALP2W | Width dependence of ALP2 | – | 0 |
| ALPL | Length dependence of ALP | – | 0.0005 |
| ALPLEXP | Exponent for length dependence of ALP | – | 1 |
| ALPNOI | Exponent for length offset for flicker noise | – | 2 |
| ALPW | Width dependence of ALP | – | 0 |

Table 2.87: PSP102VA legacy MOSFET 102.5 Device Model Parameters

| Parameter | Description | Units | Default |
|---|---|---|---|
| AXL | Length dependence of AX | – | 0.4 |
| AXO | Geometry independent linear/saturation transition factor | – | 18 |
| BETW1 | First higher-order width scaling coefficient of BETN | – | 0 |
| BETW2 | Second higher-order width scaling coefficient of BETN | – | 0 |
| BGIDLDO | GIDL probability factor at TR for drain side | – | 41 |
| BGIDLO | GIDL probability factor at TR | – | 41 |
| CBBTBOT | Band-to-band tunneling prefactor of bottom component for source-bulk junction | – | 1e-12 |
| CBBTBOTD | Band-to-band tunneling prefactor of bottom component for drain-bulk junction | – | 1e-12 |
| CBBTGAT | Band-to-band tunneling prefactor of gate-edge component for source-bulk junction | – | 1e-18 |
| CBBTGATD | Band-to-band tunneling prefactor of gate-edge component for drain-bulk junction | – | 1e-18 |
| CBBTSTI | Band-to-band tunneling prefactor of STI-edge component for source-bulk junction | – | 1e-18 |
| CBBTSTID | Band-to-band tunneling prefactor of STI-edge component for drain-bulk junction | – | 1e-18 |
| CFBO | Back-bias dependence of CF | – | 0 |
| CFL | Length dependence of DIBL-parameter | – | 0 |
| CFLEXP | Exponent for length dependence of CF | – | 2 |
| CFRDW | Outer fringe capacitance for 1 um wide channel for drain side | – | 0 |
| CFRW | Outer fringe capacitance for 1 um wide channel | – | 0 |
| CFW | Width dependence of CF | – | 0 |
| CGBOVL | Oxide capacitance for gate-bulk overlap for 1 um long channel | – | 0 |
| CGIDLDO | Back-bias dependence of GIDL for drain side | – | 0 |
| CGIDLO | Back-bias dependence of GIDL | – | 0 |
| CHIBO | Tunnelling barrier height | – | 3.1 |
| CJORBOT | Zero-bias capacitance per unit-of-area of bottom component for source-bulk junction | – | 0.001 |
| CJORBOTD | Zero-bias capacitance per unit-of-area of bottom component for drain-bulk junction | – | 0.001 |
| CJORGAT | Zero-bias capacitance per unit-of-length of gate-edge component for source-bulk junction | – | 1e-09 |

Table 2.87: PSP102VA legacy MOSFET 102.5 Device Model Parameters

| Parameter | Description | Units | Default |
|---|---|---|---|
| CJORGATD | Zero-bias capacitance per unit-of-length of gate-edge component for drain-bulk junction | – | 1e-09 |
| CJORSTI | Zero-bias capacitance per unit-of-length of STI-edge component for source-bulk junction | – | 1e-09 |
| CJORSTID | Zero-bias capacitance per unit-of-length of STI-edge component for drain-bulk junction | – | 1e-09 |
| CSL | Length dependence of CS | – | 0 |
| CSLEXP | Exponent for length dependence of CS | – | 0 |
| CSLW | Area dependence of CS | – | 0 |
| CSO | Geometry independent coulomb scattering parameter at TR | – | 0 |
| CSRHBOT | Shockley-Read-Hall prefactor of bottom component for source-bulk junction | – | 100 |
| CSRHBOTD | Shockley-Read-Hall prefactor of bottom component for drain-bulk junction | – | 100 |
| CSRHGAT | Shockley-Read-Hall prefactor of gate-edge component for source-bulk junction | – | 0.0001 |
| CSRHGATD | Shockley-Read-Hall prefactor of gate-edge component for drain-bulk junction | – | 0.0001 |
| CSRHSTI | Shockley-Read-Hall prefactor of STI-edge component for source-bulk junction | – | 0.0001 |
| CSRHSTID | Shockley-Read-Hall prefactor of STI-edge component for drain-bulk junction | – | 0.0001 |
| CSW | Width dependence of CS | – | 0 |
| CTATBOT | Trap-assisted tunneling prefactor of bottom component for source-bulk junction | – | 100 |
| CTATBOTD | Trap-assisted tunneling prefactor of bottom component for drain-bulk junction | – | 100 |
| CTATGAT | Trap-assisted tunneling prefactor of gate-edge component for source-bulk junction | – | 0.0001 |
| CTATGATD | Trap-assisted tunneling prefactor of gate-edge component for drain-bulk junction | – | 0.0001 |
| CTATSTI | Trap-assisted tunneling prefactor of STI-edge component for source-bulk junction | – | 0.0001 |
| CTATSTID | Trap-assisted tunneling prefactor of STI-edge component for drain-bulk junction | – | 0.0001 |
| CTL | Length dependence of interface states factor | – | 0 |
| CTLEXP | Exponent for length dependence of interface states factor | – | 1 |
| CTLW | Area dependence of interface states factor | – | 0 |

Table 2.87: PSP102VA legacy MOSFET 102.5 Device Model Parameters

| Parameter | Description | Units | Default |
|---|---|---|---|
| CTO | Geometry-independent interface states factor | – | 0 |
| CTW | Width dependence of interface states factor | – | 0 |
| DLQ | Effective channel length reduction for CV | – | 0 |
| DLSIL | Silicide extension over the physical gate length | – | 0 |
| DNSUBO | Effective doping bias-dependence parameter | – | 0 |
| DPHIBL | Length dependence offset of PHIB | – | 0 |
| DPHIBLEXP | Exponent for length dependence of offset of PHIB | – | 1 |
| DPHIBLW | Area dependence of offset of PHIB | – | 0 |
| DPHIBO | Geometry independent offset of PHIB | – | 0 |
| DPHIBW | Width dependence of offset of PHIB | – | 0 |
| DTA | Temperature offset w.r.t. ambient circuit temperature | – | 0 |
| DWQ | Effective channel width reduction for CV | – | 0 |
| EFO | Flicker noise frequency exponent | – | 1 |
| EPSROXO | Relative permittivity of gate dielectric | – | 3.9 |
| FBBTRBOT | Normalization field at the reference temperature for band-to-band tunneling of bottom component for source-bulk junction | – | 1e+09 |
| FBBTRBOTD | Normalization field at the reference temperature for band-to-band tunneling of bottom component for drain-bulk junction | – | 1e+09 |
| FBBTRGAT | Normalization field at the reference temperature for band-to-band tunneling of gate-edge component for source-bulk junction | – | 1e+09 |
| FBBTRGATD | Normalization field at the reference temperature for band-to-band tunneling of gate-edge component for drain-bulk junction | – | 1e+09 |
| FBBTRSTI | Normalization field at the reference temperature for band-to-band tunneling of STI-edge component for source-bulk junction | – | 1e+09 |
| FBBTRSTID | Normalization field at the reference temperature for band-to-band tunneling of STI-edge component for drain-bulk junction | – | 1e+09 |
| FBET1 | Relative mobility decrease due to first lateral profile | – | 0 |
| FBET1W | Width dependence of relative mobility decrease due to first lateral profile | – | 0 |

Table 2.87: PSP102VA legacy MOSFET 102.5 Device Model Parameters

| Parameter | Description | Units | Default |
|---|---|---|---|
| FBET2 | Relative mobility decrease due to second lateral profile | – | 0 |
| FETA0 | Effective field parameter | – | 1 |
| FJUNQ | Fraction below which source-bulk junction capacitance components are considered negligible | – | 0.03 |
| FJUNQD | Fraction below which drain-bulk junction capacitance components are considered negligible | – | 0.03 |
| FNTEXCL | Length dependence coefficient of excess noise | – | 0 |
| FNT0 | Thermal noise coefficient | – | 1 |
| FOL1 | First length dependence coefficient for short channel body effect | – | 0 |
| FOL2 | Second length dependence coefficient for short channel body effect | – | 0 |
| GC20 | Gate current slope factor | – | 0.375 |
| GC30 | Gate current curvature factor | – | 0.063 |
| GCO0 | Gate tunnelling energy adjustment | – | 0 |
| IDSATRBOT | Saturation current density at the reference temperature of bottom component for source-bulk junction | – | 1e-12 |
| IDSATRBOTD | Saturation current density at the reference temperature of bottom component for drain-bulk junction | – | 1e-12 |
| IDSATRGAT | Saturation current density at the reference temperature of gate-edge component for source-bulk junction | – | 1e-18 |
| IDSATRGATD | Saturation current density at the reference temperature of gate-edge component for drain-bulk junction | – | 1e-18 |
| IDSATRSTI | Saturation current density at the reference temperature of STI-edge component for source-bulk junction | – | 1e-18 |
| IDSATRSTID | Saturation current density at the reference temperature of STI-edge component for drain-bulk junction | – | 1e-18 |
| IGINVLW | Gate channel current pre-factor for 1 um**2 channel area | – | 0 |
| IGOVDW | Gate overlap current pre-factor for 1 um wide channel for drain side | – | 0 |

Table 2.87: PSP102VA legacy MOSFET 102.5 Device Model Parameters

| Parameter | Description | Units | Default |
|---|---|---|---|
| IGOVW | Gate overlap current pre-factor for 1 um wide channel | – | 0 |
| IMAX | Maximum current up to which forward current behaves exponentially | – | 1000 |
| KUO | Mobility degradation/enhancement coefficient | – | 0 |
| KUOWEL | Length dependent mobility degradation factor | – | 0 |
| KUOWELW | Area dependent mobility degradation factor | – | 0 |
| KUOWEO | Geometrical independent mobility degradation factor | – | 0 |
| KUOWEW | Width dependent mobility degradation factor | – | 0 |
| KVSAT | Saturation velocity degradation/enhancement coefficient | – | 0 |
| KVTHO | Threshold shift parameter | – | 0 |
| KVTHOWEL | Length dependent threshold shift parameter | – | 0 |
| KVTHOWELW | Area dependent threshold shift parameter | – | 0 |
| KVTHOWEO | Geometrical independent threshold shift parameter | – | 0 |
| KVTHOWEW | Width dependent threshold shift parameter | – | 0 |
| LAP | Effective channel length reduction per side | – | 0 |
| LEVEL | Model level | – | 1020 |
| LINTNOI | Length offset for flicker noise | – | 0 |
| LKUO | Length dependence of KUO | – | 0 |
| LKVTHO | Length dependence of KVTHO | – | 0 |
| LLODKUO | Length parameter for UO stress effect | – | 0 |
| LLODVTH | Length parameter for VTH-stress effect | – | 0 |
| LODETAO | eta0 shift modification factor for stress effect | – | 1 |
| LOV | Overlap length for gate/drain and gate/source overlap capacitance | – | 0 |
| LOVD | Overlap length for gate/drain overlap capacitance | – | 0 |
| LP1 | Mobility-related characteristic length of first lateral profile | – | 1e-08 |
| LP1W | Width dependence of mobility-related characteristic length of first lateral profile | – | 0 |
| LP2 | Mobility-related characteristic length of second lateral profile | – | 1e-08 |
| LPCK | Char. length of lateral doping profile | – | 1e-08 |

Table 2.87: PSP102VA legacy MOSFET 102.5 Device Model Parameters

| Parameter | Description | Units | Default |
|---|---|---|---|
| LPCKW | Width dependence of char. length of lateral doping profile | – | 0 |
| LVARL | Length dependence of LVAR | – | 0 |
| LVARO | Geom. independent difference between actual and programmed gate length | – | 0 |
| LVARW | Width dependence of LVAR | – | 0 |
| MEFFTATBOT | Effective mass (in units of m0) for trap-assisted tunneling of bottom component for source-bulk junction | – | 0.25 |
| MEFFTATBOTD | Effective mass (in units of m0) for trap-assisted tunneling of bottom component for drain-bulk junction | – | 0.25 |
| MEFFTATGAT | Effective mass (in units of m0) for trap-assisted tunneling of gate-edge component for source-bulk junction | – | 0.25 |
| MEFFTATGATD | Effective mass (in units of m0) for trap-assisted tunneling of gate-edge component for drain-bulk junction | – | 0.25 |
| MEFFTATSTI | Effective mass (in units of m0) for trap-assisted tunneling of STI-edge component for source-bulk junction | – | 0.25 |
| MEFFTATSTID | Effective mass (in units of m0) for trap-assisted tunneling of STI-edge component for drain-bulk junction | – | 0.25 |
| MUEO | Geometry independent mobility reduction coefficient at TR | – | 0.5 |
| MUEW | Width dependence of mobility reduction coefficient at TR | – | 0 |
| NFALW | First coefficient of flicker noise for 1 um**2 channel area | – | 8e+22 |
| NFBLW | Second coefficient of flicker noise for 1 um**2 channel area | – | 3e+07 |
| NFCLW | Third coefficient of flicker noise for 1 um**2 channel area | – | 0 |
| NOVDO | Effective doping of overlap region for drain side | – | 5e+25 |
| NOVO | Effective doping of overlap region | – | 5e+25 |
| NPCK | Pocket doping level | – | 1e+24 |
| NPCKW | Width dependence of pocket doping NPCK due to segregation | – | 0 |
| NPL | Length dependence of gate poly-silicon doping | – | 0 |

Table 2.87: PSP102VA legacy MOSFET 102.5 Device Model Parameters

| Parameter | Description | Units | Default |
|---|---|---|---|
| NPO | Geometry-independent gate poly-silicon doping | – | 1e+26 |
| NSLPO | Effective doping bias-dependence parameter | – | 0.05 |
| NSUBO | Geometry independent substrate doping | – | 3e+23 |
| NSUBW | Width dependence of background doping NSUBO due to segregation | – | 0 |
| PBOT | Grading coefficient of bottom component for source-bulk junction | – | 0.5 |
| PBOTD | Grading coefficient of bottom component for drain-bulk junction | – | 0.5 |
| PBRBOT | Breakdown onset tuning parameter of bottom component for source-bulk junction | – | 4 |
| PBRBOTD | Breakdown onset tuning parameter of bottom component for drain-bulk junction | – | 4 |
| PBRGAT | Breakdown onset tuning parameter of gate-edge component for source-bulk junction | – | 4 |
| PBRGATD | Breakdown onset tuning parameter of gate-edge component for drain-bulk junction | – | 4 |
| PBRSTI | Breakdown onset tuning parameter of STI-edge component for source-bulk junction | – | 4 |
| PBRSTID | Breakdown onset tuning parameter of STI-edge component for drain-bulk junction | – | 4 |
| PGAT | Grading coefficient of gate-edge component for source-bulk junction | – | 0.5 |
| PGATD | Grading coefficient of gate-edge component for drain-bulk junction | – | 0.5 |
| PHIGBOT | Zero-temperature bandgap voltage of bottom component for source-bulk junction | – | 1.16 |
| PHIGBOTD | Zero-temperature bandgap voltage of bottom component for drain-bulk junction | – | 1.16 |
| PHIGGAT | Zero-temperature bandgap voltage of gate-edge component for source-bulk junction | – | 1.16 |
| PHIGGATD | Zero-temperature bandgap voltage of gate-edge component for drain-bulk junction | – | 1.16 |
| PHIGSTI | Zero-temperature bandgap voltage of STI-edge component for source-bulk junction | – | 1.16 |
| PHIGSTID | Zero-temperature bandgap voltage of STI-edge component for drain-bulk junction | – | 1.16 |
| PKUO | Cross-term dependence of KUO | – | 0 |
| PKVTHO | Cross-term dependence of KVTHO | – | 0 |

Table 2.87: PSP102VA legacy MOSFET 102.5 Device Model Parameters

| Parameter | Description | Units | Default |
|---|---|---|---|
| PSTI | Grading coefficient of STI-edge component for source-bulk junction | – | 0.5 |
| PSTID | Grading coefficient of STI-edge component for drain-bulk junction | – | 0.5 |
| QMC | Quantum-mechanical correction factor | – | 1 |
| RBULK0 | Bulk resistance between node BP and BI | – | 0 |
| RG0 | Gate resistance | – | 0 |
| RINT | Contact resistance between silicide and ploy | – | 0 |
| RJUND0 | Drain-side bulk resistance between node BI and BD | – | 0 |
| RJUNS0 | Source-side bulk resistance between node BI and BS | – | 0 |
| RSB0 | Back-bias dependence of series resistance | – | 0 |
| RSG0 | Gate-bias dependence of series resistance | – | 0 |
| RSHG | Gate electrode diffusion sheet resistance | – | 0 |
| RSW1 | Source/drain series resistance for 1 um wide channel at TR | – | 2500 |
| RSW2 | Higher-order width scaling of RS | – | 0 |
| RVPOLY | Vertical poly resistance | – | 0 |
| RWELL0 | Well resistance between node BI and B | – | 0 |
| SAREF | Reference distance between OD-edge and poly from one side | – | 1e-06 |
| SBREF | Reference distance between OD-edge and poly from other side | – | 1e-06 |
| SCREF | Distance between OD-edge and well edge of a reference device | – | 1e-06 |
| STA20 | Temperature dependence of A2 | – | 0 |
| STBETL | Length dependence of temperature dependence of BETN | – | 0 |
| STBETLW | Area dependence of temperature dependence of BETN | – | 0 |
| STBET0 | Geometry independent temperature dependence of BETN | – | 1 |
| STBETW | Width dependence of temperature dependence of BETN | – | 0 |
| STBGIDLD0 | Temperature dependence of BGIDL for drain side | – | 0 |
| STBGIDL0 | Temperature dependence of BGIDL | – | 0 |
| STCS0 | Temperature dependence of CS | – | 0 |

Table 2.87: PSP102VA legacy MOSFET 102.5 Device Model Parameters

| Parameter | Description | Units | Default |
|---|---|---|---|
| STETAO | eta0 shift factor related to VTHO change | – | 0 |
| STFBBTBOT | Temperature scaling parameter for band-to-band tunneling of bottom component for source-bulk junction | – | -0.001 |
| STFBBTBOTD | Temperature scaling parameter for band-to-band tunneling of bottom component for drain-bulk junction | – | -0.001 |
| STFBBTGAT | Temperature scaling parameter for band-to-band tunneling of gate-edge component for source-bulk junction | – | -0.001 |
| STFBBTGATD | Temperature scaling parameter for band-to-band tunneling of gate-edge component for drain-bulk junction | – | -0.001 |
| STFBBTSTI | Temperature scaling parameter for band-to-band tunneling of STI-edge component for source-bulk junction | – | -0.001 |
| STFBBTSTID | Temperature scaling parameter for band-to-band tunneling of STI-edge component for drain-bulk junction | – | -0.001 |
| STIGO | Temperature dependence of IGINV and IGOV | – | 2 |
| STMUEO | Temperature dependence of MUE | – | 0 |
| STRSO | Temperature dependence of RS | – | 1 |
| STTHEMUO | Temperature dependence of THEMU | – | 1.5 |
| STTHESATL | Length dependence of temperature dependence of THESAT | – | 0 |
| STTHESATLW | Area dependence of temperature dependence of THESAT | – | 0 |
| STTHESATO | Geometry independent temperature dependence of THESAT | – | 1 |
| STTHESATW | Width dependence of temperature dependence of THESAT | – | 0 |
| STVFBL | Length dependence of temperature dependence of VFB | – | 0 |
| STVFBLW | Area dependence of temperature dependence of VFB | – | 0 |
| STVFBO | Geometry-independent temperature dependence of VFB | – | 0.0005 |
| STVFBW | Width dependence of temperature dependence of VFB | – | 0 |
| STXCORO | Temperature dependence of XCOR | – | 0 |

Table 2.87: PSP102VA legacy MOSFET 102.5 Device Model Parameters

| Parameter | Description | Units | Default |
|---|---|---|---|
| SWGIDL | Flag for GIDL current, 0=turn off IGIDL | – | 0 |
| SWIGATE | Flag for gate current, 0=turn off IG | – | 0 |
| SWIMPACT | Flag for impact ionization current, 0=turn off II | – | 0 |
| SWJUNASYM | Flag for asymmetric junctions; 0=symmetric, 1=asymmetric | – | 0 |
| SWJUNCAP | Flag for juncap, 0=turn off juncap | – | 0 |
| SWJUNEXP | Flag for JUNCAP-express; 0=full model, 1=express model | – | 0 |
| THEMUO | Mobility reduction exponent at TR | – | 1.5 |
| THESATBO | Back-bias dependence of velocity saturation | – | 0 |
| THESATGO | Gate-bias dependence of velocity saturation | – | 0 |
| THESATL | Length dependence of THESAT | – | 0.05 |
| THESATLEXP | Exponent for length dependence of THESAT | – | 1 |
| THESATLW | Area dependence of velocity saturation parameter | – | 0 |
| THESATO | Geometry independent velocity saturation parameter at TR | – | 0 |
| THESATW | Width dependence of velocity saturation parameter | – | 0 |
| TKUO | Temperature dependence of KUO | – | 0 |
| TOXO | Gate oxide thickness | – | 2e-09 |
| TOXOVDO | Overlap oxide thickness for drain side | – | 2e-09 |
| TOXOVO | Overlap oxide thickness | – | 2e-09 |
| TR | nominal (reference) temperature | – | 21 |
| TRJ | reference temperature | – | 21 |
| TYPE | Channel type parameter, +1=NMOS -1=PMOS | – | 1 |
| UO | Zero-field mobility at TR | – | 0.05 |
| VBIRBOT | Built-in voltage at the reference temperature of bottom component for source-bulk junction | – | 1 |
| VBIRBOTD | Built-in voltage at the reference temperature of bottom component for drain-bulk junction | – | 1 |
| VBIRGAT | Built-in voltage at the reference temperature of gate-edge component for source-bulk junction | – | 1 |
| VBIRGATD | Built-in voltage at the reference temperature of gate-edge component for drain-bulk junction | – | 1 |
| VBIRSTI | Built-in voltage at the reference temperature of STI-edge component for source-bulk junction | – | 1 |

Table 2.87: PSP102VA legacy MOSFET 102.5 Device Model Parameters

| Parameter | Description | Units | Default |
|---|---|---|---|
| VBIRSTID | Built-in voltage at the reference temperature of STI-edge component for drain-bulk junction | – | 1 |
| VBRBOT | Breakdown voltage of bottom component for source-bulk junction | – | 10 |
| VBRBOTD | Breakdown voltage of bottom component for drain-bulk junction | – | 10 |
| VBRGAT | Breakdown voltage of gate-edge component for source-bulk junction | – | 10 |
| VBRGATD | Breakdown voltage of gate-edge component for drain-bulk junction | – | 10 |
| VBRSTI | Breakdown voltage of STI-edge component for source-bulk junction | – | 10 |
| VBRSTID | Breakdown voltage of STI-edge component for drain-bulk junction | – | 10 |
| VFBL | Length dependence of flat-band voltage | – | 0 |
| VFBLW | Area dependence of flat-band voltage | – | 0 |
| VFBO | Geometry-independent flat-band voltage at TR | – | -1 |
| VFBW | Width dependence of flat-band voltage | – | 0 |
| VJUNREF | Typical maximum source-bulk junction voltage; usually about 2*VSUP | – | 2.5 |
| VJUNREFD | Typical maximum drain-bulk junction voltage; usually about 2*VSUP | – | 2.5 |
| VNSUBO | Effective doping bias-dependence parameter | – | 0 |
| VPO | CLM logarithmic dependence parameter | – | 0.05 |
| WBET | Characteristic width for width scaling of BETN | – | 1e-09 |
| WEB | Coefficient for SCB | – | 0 |
| WEC | Coefficient for SCC | – | 0 |
| WKUO | Width dependence of KUO | – | 0 |
| WKVTHO | Width dependence of KVTHO | – | 0 |
| WLOD | Width parameter | – | 0 |
| WLODKUO | Width parameter for UO stress effect | – | 0 |
| WLODVTH | Width parameter for VTH-stress effect | – | 0 |
| WOT | Effective channel width reduction per side | – | 0 |
| WSEG | Char. length of segregation of background doping NSUBO | – | 1e-08 |
| WSEGP | Char. length of segregation of pocket doping NPCK | – | 1e-08 |
| WVARL | Length dependence of WVAR | – | 0 |

Table 2.87: PSP102VA legacy MOSFET 102.5 Device Model Parameters

| Parameter | Description | Units | Default |
|---|---|---|---|
| WVARO | Geom. independent difference between actual and programmed field-oxide opening | – | 0 |
| WVARW | Width dependence of WVAR | – | 0 |
| XCORL | Length dependence of non-universality parameter | – | 0 |
| XCORLW | Area dependence of non-universality parameter | – | 0 |
| XCORO | Geometry independent non-universality parameter | – | 0 |
| XCORW | Width dependence of non-universality parameter | – | 0 |
| XJUNGAT | Junction depth of gate-edge component for source-bulk junction | – | 1e-07 |
| XJUNGATD | Junction depth of gate-edge component for drain-bulk junction | – | 1e-07 |
| XJUNSTI | Junction depth of STI-edge component for source-bulk junction | – | 1e-07 |
| XJUNSTID | Junction depth of STI-edge component for drain-bulk junction | – | 1e-07 |

## Level 103 MOSFET Tables (PSP version 103.4)

**Xyce** includes the PSP MOSFET model, version 103.4 [25]. Full documentation for the PSP model is available on its web site, `http://www.cea.fr/cea-tech/leti/pspsupport`. Instance and model parameters for the PSP model are given in tables 2.88 and 2.89.

Table 2.88: PSP103VA MOSFET Device Instance Parameters

| Parameter | Description | Units | Default |
|---|---|---|---|
| ABDRAIN | Bottom area of drain junction | $m^2$ | 1e-12 |
| ABSOURCE | Bottom area of source junction | $m^2$ | 1e-12 |
| AD | Bottom area of drain junction | $m^2$ | 1e-12 |
| AS | Bottom area of source junction | $m^2$ | 1e-12 |
| DELVTO | Threshold voltage shift parameter | V | 0 |
| DELVTOEDGE | Threshold voltage shift parameter of edge transistor | V | 0 |
| FACTUO | Zero-field mobility pre-factor | — | 1 |
| FACTUOEDGE | Zero-field mobility pre-factor of edge transistor | — | 1 |
| JW | Gate-edge length of source/drain junction | m | 1e-06 |
| L | Design length | m | 1e-05 |

Table 2.88: PSP103VA MOSFET Device Instance Parameters

| Parameter | Description | Units | Default |
|---|---|---|---|
| LGDRAIN | Gate-edge length of drain junction | m | 1e-06 |
| LGSOURCE | Gate-edge length of source junction | m | 1e-06 |
| LSDRAIN | STI-edge length of drain junction | m | 1e-06 |
| LSSOURCE | STI-edge length of source junction | m | 1e-06 |
| M | Alias for MULT | — | 1 |
| MULT | Number of devices in parallel | — | 1 |
| NF | Number of fingers | — | 1 |
| NGCON | Number of gate contacts | — | 1 |
| NRD | Number of squares of drain diffusion | — | 0 |
| NRS | Number of squares of source diffusion | — | 0 |
| PD | Perimeter of drain junction | m | 1e-06 |
| PS | Perimeter of source junction | m | 1e-06 |
| SA | Distance between OD-edge and poly from one side | m | 0 |
| SB | Distance between OD-edge and poly from other side | m | 0 |
| SC | Distance between OD-edge and nearest well edge | m | 0 |
| SCA | Integral of the first distribution function for scattered well dopants | — | 0 |
| SCB | Integral of the second distribution function for scattered well dopants | — | 0 |
| SCC | Integral of the third distribution function for scattered well dopants | — | 0 |
| SD | Distance between neighbouring fingers | m | 0 |
| W | Design width | m | 1e-05 |
| XGW | Distance from the gate contact to the channel edge | m | 1e-07 |

Table 2.89: PSP103VA MOSFET Device Model Parameters

| Parameter | Description | Units | Default |
|---|---|---|---|
| A1 | Impact-ionization pre-factor | — | 1 |
| A1L | Length dependence of A1 | — | 0 |
| A1O | Geometry independent impact-ionization pre-factor | — | 1 |
| A1W | Width dependence of A1 | — | 0 |

Table 2.89: PSP103VA MOSFET Device Model Parameters

| Parameter | Description | Units | Default |
|---|---|---|---|
| A2 | Impact-ionization exponent at TR | V | 10 |
| A20 | Impact-ionization exponent at TR | V | 10 |
| A3 | Saturation-voltage dependence of impact-ionization | — | 1 |
| A3L | Length dependence of A3 | — | 0 |
| A30 | Geometry independent saturation-voltage dependence of II | — | 1 |
| A3W | Width dependence of A3 | — | 0 |
| A4 | Back-bias dependence of impact-ionization | $V^{-1/2}$ | 0 |
| A4L | Length dependence of A4 | — | 0 |
| A40 | Geometry independent back-bias dependence of II | $V^{-1/2}$ | 0 |
| A4W | Width dependence of A4 | — | 0 |
| AGIDL | GIDL pre-factor | $A/V^3$ | 0 |
| AGIDLD | GIDL pre-factor for drain side | $A/V^3$ | 0 |
| AGIDLDW | Width dependence of GIDL pre-factor for drain side | $A/V^3$ | 0 |
| AGIDLW | Width dependence of GIDL pre-factor | $A/V^3$ | 0 |
| ALP | CLM pre-factor | — | 0.01 |
| ALP1 | CLM enhancement factor above threshold | V | 0 |
| ALP1L1 | Length dependence of CLM enhancement factor above threshold | V | 0 |
| ALP1L2 | Second_order length dependence of ALP1 | — | 0 |
| ALP1LEXP | Exponent for length dependence of ALP1 | — | 0.5 |
| ALP1W | Width dependence of ALP1 | — | 0 |
| ALP2 | CLM enhancement factor below threshold | $V^{-1}$ | 0 |
| ALP2L1 | Length dependence of CLM enhancement factor below threshold | $V^{-1}$ | 0 |
| ALP2L2 | Second_order length dependence of ALP2 | — | 0 |
| ALP2LEXP | Exponent for length dependence of ALP2 | — | 0.5 |
| ALP2W | Width dependence of ALP2 | — | 0 |
| ALPL | Length dependence of ALP | — | 0.0005 |
| ALPLEXP | Exponent for length dependence of ALP | — | 1 |
| ALPNOI | Exponent for length offset for flicker noise | — | 2 |
| ALPW | Width dependence of ALP | — | 0 |
| AX | Linear/saturation transition factor | — | 3 |
| AXL | Length dependence of AX | — | 0.4 |

Table 2.89: PSP103VA MOSFET Device Model Parameters

| Parameter | Description | Units | Default |
|---|---|---|---|
| AXO | Geometry independent linear/saturation transition factor | — | 18 |
| BETEDGEW | Width scaling coefficient of edge transistor mobility | — | 0 |
| BETN | Channel aspect ratio times zero-field mobility | $m^2/(Vs)$ | 0.07 |
| BETNEDGE | Channel aspect ratio times zero-field mobility of edge transistor | $m^2/(Vs)$ | 0.0005 |
| BETW1 | First higher-order width scaling coefficient of BETN | — | 0 |
| BETW2 | Second higher-order width scaling coefficient of BETN | — | 0 |
| BGIDL | GIDL probability factor at TR | V | 41 |
| BGIDLD | GIDL probability factor at TR for drain side | V | 41 |
| BGIDLDO | GIDL probability factor at TR for drain side | V | 41 |
| BGIDLO | GIDL probability factor at TR | V | 41 |
| CBBTBOT | Band-to-band tunneling prefactor of bottom component for source-bulk junction | $A/V^3$ | 1e-12 |
| CBBTBOTD | Band-to-band tunneling prefactor of bottom component for drain-bulk junction | $A/V^3$ | 1e-12 |
| CBBTGAT | Band-to-band tunneling prefactor of gate-edge component for source-bulk junction | $Am/V^3$ | 1e-18 |
| CBBTGATD | Band-to-band tunneling prefactor of gate-edge component for drain-bulk junction | $Am/V^3$ | 1e-18 |
| CBBTSTI | Band-to-band tunneling prefactor of STI-edge component for source-bulk junction | $Am/V^3$ | 1e-18 |
| CBBTSTID | Band-to-band tunneling prefactor of STI-edge component for drain-bulk junction | $Am/V^3$ | 1e-18 |
| CF | DIBL-parameter | — | 0 |
| CFB | Back bias dependence of CF | $V^{-1}$ | 0 |
| CFBEDGE | Bulk voltage dependence parameter of DIBL-parameter of edge transistors | $V^{-1}$ | 0 |
| CFBEDGEO | Bulk voltage dependence parameter of DIBL-parameter of edge transistors | $V^{-1}$ | 0 |
| CFBO | Back-bias dependence of CF | $V^{-1}$ | 0 |
| CFD | Drain voltage dependence of CF | $V^{-1}$ | 0 |
| CFDEDGE | Drain voltage dependence parameter of DIBL-parameter of edge transistors | $V^{-1}$ | 0 |
| CFDEDGEO | Drain voltage dependence parameter of DIBL-parameter of edge transistors | $V^{-1}$ | 0 |
| CFDO | Drain voltage dependence of CF | $V^{-1}$ | 0 |

Table 2.89: PSP103VA MOSFET Device Model Parameters

| Parameter | Description | Units | Default |
|---|---|---|---|
| CFEDGE | DIBL parameter of edge transistors | — | 0 |
| CFEDGEL | Length dependence of DIBL-parameter of edge transistors | — | 0 |
| CFEDGELEXP | Exponent for length dependence of DIBL-parameter of edge transistors | — | 2 |
| CFEDGEW | Width dependence of DIBL-parameter of edge transistors | — | 0 |
| CFL | Length dependence of DIBL-parameter | — | 0 |
| CFLEXP | Exponent for length dependence of CF | — | 2 |
| CFR | Outer fringe capacitance | F | 0 |
| CFRD | Outer fringe capacitance for drain side | F | 0 |
| CFRDW | Outer fringe capacitance for 1 um wide channel for drain side | F | 0 |
| CFRW | Outer fringe capacitance for 1 um wide channel | F | 0 |
| CFW | Width dependence of CF | — | 0 |
| CGBOV | Oxide capacitance for gate-bulk overlap | F | 0 |
| CGBOVL | Oxide capacitance for gate-bulk overlap for 1 um long channel | F | 0 |
| CGIDL | Back-bias dependence of GIDL | — | 0 |
| CGIDLD | Back-bias dependence of GIDL for drain side | — | 0 |
| CGIDLDO | Back-bias dependence of GIDL for drain side | — | 0 |
| CGIDLO | Back-bias dependence of GIDL | — | 0 |
| CGOV | Oxide capacitance for gate-drain/source overlap | F | 1e-15 |
| CGOVD | Oxide capacitance for gate-drain overlap | F | 1e-15 |
| CHIB | Tunnelling barrier height | V | 3.1 |
| CHIBO | Tunnelling barrier height | V | 3.1 |
| CJORBOT | Zero-bias capacitance per unit-of-area of bottom component for source-bulk junction | $F/m^2$ | 0.001 |
| CJORBOTD | Zero-bias capacitance per unit-of-area of bottom component for drain-bulk junction | $F/m^2$ | 0.001 |
| CJORGAT | Zero-bias capacitance per unit-of-length of gate-edge component for source-bulk junction | F/m | 1e-09 |
| CJORGATD | Zero-bias capacitance per unit-of-length of gate-edge component for drain-bulk junction | F/m | 1e-09 |
| CJORSTI | Zero-bias capacitance per unit-of-length of STI-edge component for source-bulk junction | F/m | 1e-09 |
| CJORSTID | Zero-bias capacitance per unit-of-length of STI-edge component for drain-bulk junction | F/m | 1e-09 |

Table 2.89: PSP103VA MOSFET Device Model Parameters

| Parameter | Description | Units | Default |
|---|---|---|---|
| COX | Oxide capacitance for intrinsic channel | F | 1e-14 |
| CS | Coulomb scattering parameter at TR | — | 0 |
| CSL | Length dependence of CS | — | 0 |
| CSLEXP | Exponent for length dependence of CS | — | 1 |
| CSLW | Area dependence of CS | — | 0 |
| CSO | Geometry independent coulomb scattering parameter at TR | — | 0 |
| CSRHBOT | Shockley-Read-Hall prefactor of bottom component for source-bulk junction | $A/m^3$ | 100 |
| CSRHBOTD | Shockley-Read-Hall prefactor of bottom component for drain-bulk junction | $A/m^3$ | 100 |
| CSRHGAT | Shockley-Read-Hall prefactor of gate-edge component for source-bulk junction | $A/m^2$ | 0.0001 |
| CSRHGATD | Shockley-Read-Hall prefactor of gate-edge component for drain-bulk junction | $A/m^2$ | 0.0001 |
| CSRHSTI | Shockley-Read-Hall prefactor of STI-edge component for source-bulk junction | $A/m^2$ | 0.0001 |
| CSRHSTID | Shockley-Read-Hall prefactor of STI-edge component for drain-bulk junction | $A/m^2$ | 0.0001 |
| CSW | Width dependence of CS | — | 0 |
| CT | Interface states factor | — | 0 |
| CTATBOT | Trap-assisted tunneling prefactor of bottom component for source-bulk junction | $A/m^3$ | 100 |
| CTATBOTD | Trap-assisted tunneling prefactor of bottom component for drain-bulk junction | $A/m^3$ | 100 |
| CTATGAT | Trap-assisted tunneling prefactor of gate-edge component for source-bulk junction | $A/m^2$ | 0.0001 |
| CTATGATD | Trap-assisted tunneling prefactor of gate-edge component for drain-bulk junction | $A/m^2$ | 0.0001 |
| CTATSTI | Trap-assisted tunneling prefactor of STI-edge component for source-bulk junction | $A/m^2$ | 0.0001 |
| CTATSTID | Trap-assisted tunneling prefactor of STI-edge component for drain-bulk junction | $A/m^2$ | 0.0001 |
| CTEDGE | Interface states factor of edge transistors | — | 0 |
| CTEDGEL | Length dependence of interface states factor of edge transistors | — | 0 |
| CTEDGELEXP | Exponent for length dependence of interface states factor of edge transistors | — | 1 |
| CTEDGEO | Geometry-independent interface states factor of edge transistors | — | 0 |

Table 2.89: PSP103VA MOSFET Device Model Parameters

| Parameter | Description | Units | Default |
|---|---|---|---|
| CTL | Length dependence of interface states factor | — | 0 |
| CTLEXP | Exponent for length dependence of interface states factor | — | 1 |
| CTLW | Area dependence of interface states factor | — | 0 |
| CTO | Geometry-independent interface states factor | — | 0 |
| CTW | Width dependence of interface states factor | — | 0 |
| DELVTAC | Offset parameter for PHIB in separate charge calculation | V | 0 |
| DELVTACL | Length dependence of DELVTAC | V | 0 |
| DELVTACLEXP | Exponent for length dependence of offset of DELVTAC | — | 1 |
| DELVTACLW | Area dependence of DELVTAC | V | 0 |
| DELVTACO | Geom. independent offset parameter for PHIB in separate charge calculation | V | 0 |
| DELVTACW | Width dependence of DELVTAC | V | 0 |
| DLQ | Effective channel length reduction for CV | m | 0 |
| DLSIL | Silicide extension over the physical gate length | m | 0 |
| DNSUB | Effective doping bias-dependence parameter | $V^{-1}$ | 0 |
| DNSUBO | Effective doping bias-dependence parameter | $V^{-1}$ | 0 |
| DPHIB | Offset parameter for PHIB | V | 0 |
| DPHIBEDGE | Offset parameter for PHIB of edge transistors | V | 0 |
| DPHIBEDGEL | Length dependence of edge transistor PHIB offset | V | 0 |
| DPHIBEDGELEXP | Exponent for length dependence of edge transistor PHIB offset | — | 1 |
| DPHIBEDGELW | Area dependence of edge transistor PHIB offset | V | 0 |
| DPHIBEDGEO | Geometry independent of edge transistor PHIB offset | V | 0 |
| DPHIBEDGEW | Width dependence of edge transistor PHIB offset | V | 0 |
| DPHIBL | Length dependence offset of PHIB | V | 0 |
| DPHIBLEXP | Exponent for length dependence of offset of PHIB | — | 1 |
| DPHIBLW | Area dependence of offset of PHIB | V | 0 |
| DPHIBO | Geometry independent offset of PHIB | V | 0 |
| DPHIBW | Width dependence of offset of PHIB | V | 0 |
| DTA | Temperature offset w.r.t. ambient temperature | K | 0 |
| DVSBNUD | Vsb-range for NUD-effect | V | 1 |

Table 2.89: PSP103VA MOSFET Device Model Parameters

| Parameter | Description | Units | Default |
|---|---|---|---|
| DVSBNUDO | Vsb range for NUD-effect | V | 1 |
| DWQ | Effective channel width reduction for CV | m | 0 |
| EF | Flicker noise frequency exponent | — | 1 |
| EFEDGE | Flicker noise frequency exponent of edge transistors | — | 1 |
| EFEDGEO | Flicker noise frequency exponent | — | 1 |
| EFO | Flicker noise frequency exponent | — | 1 |
| EPSROX | Relative permittivity of gate dielectric | — | 3.9 |
| EPSROXO | Relative permittivity of gate dielectric | — | 3.9 |
| FACNEFFAC | Pre-factor for effective substrate doping in separate charge calculation | — | 1 |
| FACNEFFACL | Length dependence of FACNEFFAC | — | 0 |
| FACNEFFACLW | Area dependence of FACNEFFAC | — | 0 |
| FACNEFFACO | Geom. independent pre-factor for effective substrate doping in separate charge calculation | — | 1 |
| FACNEFFACW | Width dependence of FACNEFFAC | — | 0 |
| FBBTRBOT | Normalization field at the reference temperature for band-to-band tunneling of bottom component for source-bulk junction | $Vm^{-1}$ | 1e+09 |
| FBBTRBOTD | Normalization field at the reference temperature for band-to-band tunneling of bottom component for drain-bulk junction | $Vm^{-1}$ | 1e+09 |
| FBBTRGAT | Normalization field at the reference temperature for band-to-band tunneling of gate-edge component for source-bulk junction | $Vm^{-1}$ | 1e+09 |
| FBBTRGATD | Normalization field at the reference temperature for band-to-band tunneling of gate-edge component for drain-bulk junction | $Vm^{-1}$ | 1e+09 |
| FBBTRSTI | Normalization field at the reference temperature for band-to-band tunneling of STI-edge component for source-bulk junction | $Vm^{-1}$ | 1e+09 |
| FBBTRSTID | Normalization field at the reference temperature for band-to-band tunneling of STI-edge component for drain-bulk junction | $Vm^{-1}$ | 1e+09 |
| FBET1 | Relative mobility decrease due to first lateral profile | — | 0 |
| FBET1W | Width dependence of relative mobility decrease due to first lateral profile | — | 0 |
| FBET2 | Relative mobility decrease due to second lateral profile | — | 0 |
| FBETEDGE | Length dependence of edge transistor mobility | — | 0 |

Table 2.89: PSP103VA MOSFET Device Model Parameters

| Parameter | Description | Units | Default |
|---|---|---|---|
| FETA | Effective field parameter | — | 1 |
| FETAO | Effective field parameter | — | 1 |
| FJUNQ | Fraction below which source-bulk junction capacitance components are considered negligible | — | 0.03 |
| FJUNQD | Fraction below which drain-bulk junction capacitance components are considered negligible | — | 0.03 |
| FNT | Thermal noise coefficient | — | 1 |
| FNTEDGE | Thermal noise coefficient of edge transistors | — | 1 |
| FNTEDGEO | Thermal noise coefficient | — | 1 |
| FNTEXC | Excess noise coefficient | — | 0 |
| FNTEXCL | Length dependence coefficient of excess noise | — | 0 |
| FNTO | Thermal noise coefficient | — | 1 |
| FOL1 | First length dependence coefficient for short channel body effect | — | 0 |
| FOL2 | Second length dependence coefficient for short channel body effect | — | 0 |
| FREV | Coefficient for reverse breakdown current limitation | — | 1000 |
| GC2 | Gate current slope factor | — | 0.375 |
| GC2O | Gate current slope factor | — | 0.375 |
| GC3 | Gate current curvature factor | — | 0.063 |
| GC3O | Gate current curvature factor | — | 0.063 |
| GCO | Gate tunnelling energy adjustment | — | 0 |
| GCOO | Gate tunnelling energy adjustment | — | 0 |
| GFACNUD | Body-factor change due to NUD-effect | — | 1 |
| GFACNUDL | Length dependence of GFACNUD | — | 0 |
| GFACNUDLEXP | Exponent for length dependence of GFACNUD | — | 1 |
| GFACNUDLW | Area dependence of GFACNUD | — | 0 |
| GFACNUDO | Geom. independent body-factor change due to NUD-effect | — | 1 |
| GFACNUDW | Width dependence of GFACNUD | — | 0 |
| IDSATRBOT | Saturation current density at the reference temperature of bottom component for source-bulk junction | $A/m^2$ | 1e-12 |
| IDSATRBOTD | Saturation current density at the reference temperature of bottom component for drain-bulk junction | $A/m^2$ | 1e-12 |

Table 2.89: PSP103VA MOSFET Device Model Parameters

| Parameter | Description | Units | Default |
|---|---|---|---|
| IDSATRGAT | Saturation current density at the reference temperature of gate-edge component for source-bulk junction | A/m | 1e-18 |
| IDSATRGATD | Saturation current density at the reference temperature of gate-edge component for drain-bulk junction | A/m | 1e-18 |
| IDSATRSTI | Saturation current density at the reference temperature of STI-edge component for source-bulk junction | A/m | 1e-18 |
| IDSATRSTID | Saturation current density at the reference temperature of STI-edge component for drain-bulk junction | A/m | 1e-18 |
| IGINV | Gate channel current pre-factor | A | 0 |
| IGINVLW | Gate channel current pre-factor for 1 um**2 channel area | A | 0 |
| IGOV | Gate overlap current pre-factor | A | 0 |
| IGOVD | Gate overlap current pre-factor for drain side | A | 0 |
| IGOVDW | Gate overlap current pre-factor for 1 um wide channel for drain side | A | 0 |
| IGOVW | Gate overlap current pre-factor for 1 um wide channel | A | 0 |
| IMAX | Maximum current up to which forward current behaves exponentially | A | 1000 |
| KUO | Mobility degradation/enhancement coefficient | m | 0 |
| KUOWEL | Length dependent mobility degradation factor | — | 0 |
| KUOWELW | Area dependent mobility degradation factor | — | 0 |
| KUOWEO | Geometrical independent mobility degradation factor | — | 0 |
| KUOWEW | Width dependent mobility degradation factor | — | 0 |
| KVSAT | Saturation velocity degradation/enhancement coefficient | m | 0 |
| KVTHO | Threshold shift parameter | Vm | 0 |
| KVTHOWEL | Length dependent threshold shift parameter | — | 0 |
| KVTHOWELW | Area dependent threshold shift parameter | — | 0 |
| KVTHOWEO | Geometrical independent threshold shift parameter | — | 0 |
| KVTHOWEW | Width dependent threshold shift parameter | — | 0 |
| LAP | Effective channel length reduction per side | m | 0 |
| LEVEL | Model level | — | 103 |
| LINTNOI | Length offset for flicker noise | m | 0 |

Table 2.89: PSP103VA MOSFET Device Model Parameters

| Parameter | Description | Units | Default |
|---|---|---|---|
| LKUO | Length dependence of KUO | — | 0 |
| LKVTHO | Length dependence of KVTHO | — | 0 |
| LLODKUO | Length parameter for UO stress effect | — | 0 |
| LLODVTH | Length parameter for VTH-stress effect | — | 0 |
| LMAX | Dummy parameter to label binning set | m | 1 |
| LMIN | Dummy parameter to label binning set | m | 0 |
| LODETAO | Eta0 shift modification factor for stress effect | — | 1 |
| LOV | Overlap length for gate/drain and gate/source overlap capacitance | m | 0 |
| LOVD | Overlap length for gate/drain overlap capacitance | m | 0 |
| LP1 | Mobility-related characteristic length of first lateral profile | m | 1e-08 |
| LP1W | Width dependence of mobility-related characteristic length of first lateral profile | — | 0 |
| LP2 | Mobility-related characteristic length of second lateral profile | m | 1e-08 |
| LPCK | Char. length of lateral doping profile | m | 1e-08 |
| LPCKW | Width dependence of char. length of lateral doping profile | — | 0 |
| LPEDGE | Exponent for length dependence of edge transistor mobility | m | 1e-08 |
| LVARL | Length dependence of LVAR | — | 0 |
| LVARO | Geom. independent difference between actual and programmed gate length | m | 0 |
| LVARW | Width dependence of LVAR | — | 0 |
| MEFFTATBOT | Effective mass (in units of m0) for trap-assisted tunneling of bottom component for source-bulk junction | — | 0.25 |
| MEFFTATBOTD | Effective mass (in units of m0) for trap-assisted tunneling of bottom component for drain-bulk junction | — | 0.25 |
| MEFFTATGAT | Effective mass (in units of m0) for trap-assisted tunneling of gate-edge component for source-bulk junction | — | 0.25 |
| MEFFTATGATD | Effective mass (in units of m0) for trap-assisted tunneling of gate-edge component for drain-bulk junction | — | 0.25 |
| MEFFTATSTI | Effective mass (in units of m0) for trap-assisted tunneling of STI-edge component for source-bulk junction | — | 0.25 |

Table 2.89: PSP103VA MOSFET Device Model Parameters

| Parameter | Description | Units | Default |
|---|---|---|---|
| MEFFTATSTID | Effective mass (in units of m0) for trap-assisted tunneling of STI-edge component for drain-bulk junction | — | 0.25 |
| MUE | Mobility reduction coefficient at TR | m/V | 0.5 |
| MUEO | Geometry independent mobility reduction coefficient at TR | m/V | 0.5 |
| MUEW | Width dependence of mobility reduction coefficient at TR | — | 0 |
| NEFF | Effective substrate doping | $m^{-3}$ | 5e+23 |
| NEFFEDGE | Effective substrate doping of edge transistors | $m^{-3}$ | 5e+23 |
| NFA | First coefficient of flicker noise | — | 8e+22 |
| NFAEDGE | First coefficient of flicker noise of edge transistors | — | 8e+22 |
| NFAEDGELW | First coefficient of flicker noise for 1 um**2 channel area | — | 8e+22 |
| NFALW | First coefficient of flicker noise for 1 um**2 channel area | — | 8e+22 |
| NFB | Second coefficient of flicker noise | — | 3e+07 |
| NFBEDGE | Second coefficient of flicker noise of edge transistors | — | 3e+07 |
| NFBEDGELW | Second coefficient of flicker noise for 1 um**2 channel area | — | 3e+07 |
| NFBLW | Second coefficient of flicker noise for 1 um**2 channel area | — | 3e+07 |
| NFC | Third coefficient of flicker noise | $V^{-1}$ | 0 |
| NFCEDGE | Third coefficient of flicker noise of edge transistors | $V^{-1}$ | 0 |
| NFCEDGELW | Third coefficient of flicker noise for 1 um**2 channel area | $V^{-1}$ | 0 |
| NFCLW | Third coefficient of flicker noise for 1 um**2 channel area | $V^{-1}$ | 0 |
| NOV | Effective doping of overlap region | $m^{-3}$ | 5e+25 |
| NOVD | Effective doping of overlap region for drain side | $m^{-3}$ | 5e+25 |
| NOVDO | Effective doping of overlap region for drain side | $m^{-3}$ | 5e+25 |
| NOVO | Effective doping of overlap region | $m^{-3}$ | 5e+25 |
| NP | Gate poly-silicon doping | $m^{-3}$ | 1e+26 |
| NPCK | Pocket doping level | $m^{-3}$ | 1e+24 |
| NPCKW | Width dependence of pocket doping NPCK due to segregation | — | 0 |

Table 2.89: PSP103VA MOSFET Device Model Parameters

| Parameter | Description | Units | Default |
|---|---|---|---|
| NPL | Length dependence of gate poly-silicon doping | — | 0 |
| NPO | Geometry-independent gate poly-silicon doping | $m^{-3}$ | 1e+26 |
| NSLP | Effective doping bias-dependence parameter | V | 0.05 |
| NSLPO | Effective doping bias-dependence parameter | V | 0.05 |
| NSUBEDGEL | Length dependence of edge transistor substrate doping | — | 0 |
| NSUBEDGELW | Area dependence of edge transistor substrate doping | — | 0 |
| NSUBEDGEO | Geometry independent substrate doping of edge transistors | $m^{-3}$ | 5e+23 |
| NSUBEDGEW | Width dependence of edge transistor substrate doping | — | 0 |
| NSUBO | Geometry independent substrate doping | $m^{-3}$ | 3e+23 |
| NSUBW | Width dependence of background doping NSUBO due to segregation | — | 0 |
| PBOT | Grading coefficient of bottom component for source-bulk junction | — | 0.5 |
| PBOTD | Grading coefficient of bottom component for drain-bulk junction | — | 0.5 |
| PBRBOT | Breakdown onset tuning parameter of bottom component for source-bulk junction | V | 4 |
| PBRBOTD | Breakdown onset tuning parameter of bottom component for drain-bulk junction | V | 4 |
| PBRGAT | Breakdown onset tuning parameter of gate-edge component for source-bulk junction | V | 4 |
| PBRGATD | Breakdown onset tuning parameter of gate-edge component for drain-bulk junction | V | 4 |
| PBRSTI | Breakdown onset tuning parameter of STI-edge component for source-bulk junction | V | 4 |
| PBRSTID | Breakdown onset tuning parameter of STI-edge component for drain-bulk junction | V | 4 |
| PGAT | Grading coefficient of gate-edge component for source-bulk junction | — | 0.5 |
| PGATD | Grading coefficient of gate-edge component for drain-bulk junction | — | 0.5 |
| PHIGBOT | Zero-temperature bandgap voltage of bottom component for source-bulk junction | V | 1.16 |
| PHIGBOTD | Zero-temperature bandgap voltage of bottom component for drain-bulk junction | V | 1.16 |
| PHIGGAT | Zero-temperature bandgap voltage of gate-edge component for source-bulk junction | V | 1.16 |

Table 2.89: PSP103VA MOSFET Device Model Parameters

| Parameter | Description | Units | Default |
|---|---|---|---|
| PHIGGATD | Zero-temperature bandgap voltage of gate-edge component for drain-bulk junction | V | 1.16 |
| PHIGSTI | Zero-temperature bandgap voltage of STI-edge component for source-bulk junction | V | 1.16 |
| PHIGSTID | Zero-temperature bandgap voltage of STI-edge component for drain-bulk junction | V | 1.16 |
| PKUO | Cross-term dependence of KUO | — | 0 |
| PKVTHO | Cross-term dependence of KVTHO | — | 0 |
| PLA1 | Coefficient for the length dependence of A1 | — | 0 |
| PLA3 | Coefficient for the length dependence of A3 | — | 0 |
| PLA4 | Coefficient for the length dependence of A4 | $V^{-1/2}$ | 0 |
| PLAGIDL | Coefficient for the length dependence of AGIDL | $A/V^3$ | 0 |
| PLAGIDLD | Coefficient for the length dependence of AGIDL for drain side | $A/V^3$ | 0 |
| PLALP | Coefficient for the length dependence of ALP | — | 0 |
| PLALP1 | Coefficient for the length dependence of ALP1 | V | 0 |
| PLALP2 | Coefficient for the length dependence of ALP2 | $V^{-1}$ | 0 |
| PLAX | Coefficient for the length dependence of AX | — | 0 |
| PLBETN | Coefficient for the length dependence of BETN | $m^2/(Vs)$ | 0 |
| PLBETNEDGE | Coefficient for the length dependence of BETNEDGE | $m^2/(Vs)$ | 0 |
| PLCF | Coefficient for the length dependence of CF | — | 0 |
| PLCFEDGE | Coefficient for the length dependence of CFEDGE | — | 0 |
| PLCFR | Coefficient for the length dependence of CFR | F | 0 |
| PLCFRD | Coefficient for the length dependence of CFR for drain side | F | 0 |
| PLCGBOV | Coefficient for the length dependence of CGBOV | F | 0 |
| PLCGOV | Coefficient for the length dependence of CGOV | F | 0 |
| PLCGOVD | Coefficient for the length dependence of CGOV for drain side | F | 0 |
| PLCOX | Coefficient for the length dependence of COX | F | 0 |
| PLCS | Coefficient for the length dependence of CS | — | 0 |
| PLCT | Coefficient for the length dependence of CT | — | 0 |
| PLCTEDGE | Coefficient for the length dependence of CTEDGE | — | 0 |
| PLDELVTAC | Coefficient for the length dependence of DELVTAC | V | 0 |

Table 2.89: PSP103VA MOSFET Device Model Parameters

| Parameter | Description | Units | Default |
|---|---|---|---|
| PLDPHIB | Coefficient for the length dependence of DPHIB | V | 0 |
| PLDPHIBEDGE | Coefficient for the length dependence of DPHIBEDGE | V | 0 |
| PLFACNEFFAC | Coefficient for the length dependence of FACNEFFAC | — | 0 |
| PLFNTEXC | Coefficient for the length dependence of FNTEXC | — | 0 |
| PLGFACNUD | Coefficient for the length dependence of GFACNUD | — | 0 |
| PLIGINV | Coefficient for the length dependence of IGINV | A | 0 |
| PLIGOV | Coefficient for the length dependence of IGOV | A | 0 |
| PLIGOVD | Coefficient for the length dependence of IGOV for drain side | A | 0 |
| PLKUOWE | Coefficient for the length dependence part of KUOWE | — | 0 |
| PLKVTHOWE | Coefficient for the length dependence part of KVTHOWE | — | 0 |
| PLMUE | Coefficient for the length dependence of MUE | m/V | 0 |
| PLNEFF | Coefficient for the length dependence of NEFF | $m^{-3}$ | 0 |
| PLNEFFEDGE | Coefficient for the length dependence of NEFFEDGE | $m^{-3}$ | 0 |
| PLNFA | Coefficient for the length dependence of NFA | — | 0 |
| PLNFAEDGE | Coefficient for the length dependence of NFAEDGE | — | 0 |
| PLNFB | Coefficient for the length dependence of NFB | — | 0 |
| PLNFBEDGE | Coefficient for the length dependence of NFBEDGE | — | 0 |
| PLNFC | Coefficient for the length dependence of NFC | $V^{-1}$ | 0 |
| PLNFCEDGE | Coefficient for the length dependence of NFCEDGE | $V^{-1}$ | 0 |
| PLNOV | Coefficient for the length dependence of NOV | $m^{-3}$ | 0 |
| PLNOVD | Coefficient for the length dependence of NOV for drain side | $m^{-3}$ | 0 |
| PLNP | Coefficient for the length dependence of NP | $m^{-3}$ | 0 |
| PLPSCE | Coefficient for the length dependence of PSCE | — | 0 |
| PLPSCEEDGE | Coefficient for the length dependence of PSCEEDGE | — | 0 |
| PLRS | Coefficient for the length dependence of RS | Ω | 0 |
| PLSTBET | Coefficient for the length dependence of STBET | — | 0 |

Table 2.89: PSP103VA MOSFET Device Model Parameters

| Parameter | Description | Units | Default |
|---|---|---|---|
| PLSTBETEDGE | Coefficient for the length dependence of STBETEDGE | — | 0 |
| PLSTTHESAT | Coefficient for the length dependence of STTHESAT | — | 0 |
| PLSTVFB | Coefficient for the length dependence of STVFB | V/K | 0 |
| PLSTVFBEDGE | Coefficient for the length dependence of STVFBEDGE | V/K | 0 |
| PLTHESAT | Coefficient for the length dependence of THESAT | $V^{-1}$ | 0 |
| PLTHESATB | Coefficient for the length dependence of THESATB | $V^{-1}$ | 0 |
| PLTHESATG | Coefficient for the length dependence of THESATG | $V^{-1}$ | 0 |
| PLVFB | Coefficient for the length dependence of VFB | V | 0 |
| PLWA1 | Coefficient for the length times width dependence of A1 | — | 0 |
| PLWA3 | Coefficient for the length times width dependence of A3 | — | 0 |
| PLWA4 | Coefficient for the length times width dependence of A4 | $V^{-1/2}$ | 0 |
| PLWAGIDL | Coefficient for the length times width dependence of AGIDL | $A/V^3$ | 0 |
| PLWAGIDLD | Coefficient for the length times width dependence of AGIDL for drain side | $A/V^3$ | 0 |
| PLWALP | Coefficient for the length times width dependence of ALP | — | 0 |
| PLWALP1 | Coefficient for the length times width dependence of ALP1 | V | 0 |
| PLWALP2 | Coefficient for the length times width dependence of ALP2 | $V^{-1}$ | 0 |
| PLWAX | Coefficient for the length times width dependence of AX | — | 0 |
| PLWBETN | Coefficient for the length times width dependence of BETN | $m^2/(Vs)$ | 0 |
| PLWBETNEDGE | Coefficient for the length times width dependence of BETNEDGE | $m^2/(Vs)$ | 0 |
| PLWCF | Coefficient for the length times width dependence of CF | — | 0 |
| PLWCFEDGE | Coefficient for the length times width dependence of CFEDGE | — | 0 |
| PLWCFR | Coefficient for the length times width dependence of CFR | F | 0 |

Table 2.89: PSP103VA MOSFET Device Model Parameters

| Parameter | Description | Units | Default |
|---|---|---|---|
| PLWCFRD | Coefficient for the length times width dependence of CFR for drain side | F | 0 |
| PLWCGBOV | Coefficient for the length times width dependence of CGBOV | F | 0 |
| PLWCGOV | Coefficient for the length times width dependence of CGOV | F | 0 |
| PLWCGOVD | Coefficient for the length times width dependence of CGOV for drain side | F | 0 |
| PLWCOX | Coefficient for the length times width dependence of COX | F | 0 |
| PLWCS | Coefficient for the length times width dependence of CS | — | 0 |
| PLWCT | Coefficient for the length times width dependence of CT | — | 0 |
| PLWCTEDGE | Coefficient for the length times width dependence of CTEDGE | — | 0 |
| PLWDELVTAC | Coefficient for the length times width dependence of DELVTAC | V | 0 |
| PLWDPHIB | Coefficient for the length times width dependence of DPHIB | V | 0 |
| PLWDPHIBEDGE | Coefficient for the length times width dependence of DPHIBEDGE | V | 0 |
| PLWFACNEFFAC | Coefficient for the length times width dependence of FACNEFFAC | — | 0 |
| PLWFNTEXC | Coefficient for the length times width dependence of FNTEXC | — | 0 |
| PLWGFACNUD | Coefficient for the length times width dependence of GFACNUD | — | 0 |
| PLWIGINV | Coefficient for the length times width dependence of IGINV | A | 0 |
| PLWIGOV | Coefficient for the length times width dependence of IGOV | A | 0 |
| PLWIGOVD | Coefficient for the length times width dependence of IGOV for drain side | A | 0 |
| PLWKUOWE | Coefficient for the length times width dependence part of KUOWE | — | 0 |
| PLWKVTHOWE | Coefficient for the length times width dependence part of KVTHOWE | — | 0 |
| PLWMUE | Coefficient for the length times width dependence of MUE | m/V | 0 |
| PLWNEFF | Coefficient for the length times width dependence of NEFF | $m^{-3}$ | 0 |

Table 2.89: PSP103VA MOSFET Device Model Parameters

| Parameter | Description | Units | Default |
|---|---|---|---|
| PLWNEFFEDGE | Coefficient for the length times width dependence of NEFFEDGE | $m^{-3}$ | 0 |
| PLWNFA | Coefficient for the length times width dependence of NFA | — | 0 |
| PLWNFAEDGE | Coefficient for the length times width dependence of NFAEDGE | — | 0 |
| PLWNFB | Coefficient for the length times width dependence of NFB | — | 0 |
| PLWNFBEDGE | Coefficient for the length times width dependence of NFBEDGE | — | 0 |
| PLWNFC | Coefficient for the length times width dependence of NFC | $V^{-1}$ | 0 |
| PLWNFCEDGE | Coefficient for the length times width dependence of NFCEDGE | $V^{-1}$ | 0 |
| PLWNOV | Coefficient for the length times width dependence of NOV | $m^{-3}$ | 0 |
| PLWNOVD | Coefficient for the length times width dependence of NOV for drain side | $m^{-3}$ | 0 |
| PLWNP | Coefficient for the length times width dependence of NP | $m^{-3}$ | 0 |
| PLWPSCE | Coefficient for the length times width dependence of PSCE | — | 0 |
| PLWPSCEEDGE | Coefficient for the length times width dependence of PSCEEDGE | — | 0 |
| PLWRS | Coefficient for the length times width dependence of RS | Ω | 0 |
| PLWSTBET | Coefficient for the length times width dependence of STBET | — | 0 |
| PLWSTBETEDGE | Coefficient for the length times width dependence of STBETEDGE | — | 0 |
| PLWSTTHESAT | Coefficient for the length times width dependence of STTHESAT | — | 0 |
| PLWSTVFB | Coefficient for the length times width dependence of STVFB | V/K | 0 |
| PLWSTVFBEDGE | Coefficient for the length times width dependence of STVFBEDGE | V/K | 0 |
| PLWTHESAT | Coefficient for the length times width dependence of THESAT | $V^{-1}$ | 0 |
| PLWTHESATB | Coefficient for the length times width dependence of THESATB | $V^{-1}$ | 0 |
| PLWTHESATG | Coefficient for the length times width dependence of THESATG | $V^{-1}$ | 0 |

Table 2.89: PSP103VA MOSFET Device Model Parameters

| Parameter | Description | Units | Default |
|---|---|---|---|
| PLWVFB | Coefficient for the length times width dependence of VFB | V | 0 |
| PLWXCOR | Coefficient for the length times width dependence of XCOR | $V^{-1}$ | 0 |
| PLXCOR | Coefficient for the length dependence of XCOR | $V^{-1}$ | 0 |
| POA1 | Coefficient for the geometry independent part of A1 | — | 1 |
| POA2 | Coefficient for the geometry independent part of A2 | V | 10 |
| POA3 | Coefficient for the geometry independent part of A3 | — | 1 |
| POA4 | Coefficient for the geometry independent part of A4 | $V^{-1/2}$ | 0 |
| POAGIDL | Coefficient for the geometry independent part of AGIDL | $A/V^3$ | 0 |
| POAGIDLD | Coefficient for the geometry independent part of AGIDL for drain side | $A/V^3$ | 0 |
| POALP | Coefficient for the geometry independent part of ALP | — | 0.01 |
| POALP1 | Coefficient for the geometry independent part of ALP1 | V | 0 |
| POALP2 | Coefficient for the geometry independent part of ALP2 | $V^{-1}$ | 0 |
| POAX | Coefficient for the geometry independent part of AX | — | 3 |
| POBETN | Coefficient for the geometry independent part of BETN | $m^2/(Vs)$ | 0.07 |
| POBETNEDGE | Coefficient for the geometry independent part of BETNEDGE | $m^2/(Vs)$ | 0.0005 |
| POBGIDL | Coefficient for the geometry independent part of BGIDL | V | 41 |
| POBGIDLD | Coefficient for the geometry independent part of BGIDL for drain side | V | 41 |
| POCF | Coefficient for the geometry independent part of CF | — | 0 |
| POCFB | Coefficient for the geometry independent part of CFB | $V^{-1}$ | 0 |
| POCFBEDGE | Coefficient for the geometry independent part of CFBEDGE | $V^{-1}$ | 0 |
| POCFD | Coefficient for the geometry independent part of CFD | $V^{-1}$ | 0 |

Table 2.89: PSP103VA MOSFET Device Model Parameters

| Parameter | Description | Units | Default |
|---|---|---|---|
| POCFDEDGE | Coefficient for the geometry independent part of CFDEDGE | $V^{-1}$ | 0 |
| POCFEDGE | Coefficient for the geometry independent part of CFEDGE | — | 0 |
| POCFR | Coefficient for the geometry independent part of CFR | F | 0 |
| POCFRD | Coefficient for the geometry independent part of CFR for drain side | F | 0 |
| POCGBOV | Coefficient for the geometry independent part of CGBOV | F | 0 |
| POCGIDL | Coefficient for the geometry independent part of CGIDL | — | 0 |
| POCGIDLD | Coefficient for the geometry independent part of CGIDL for drain side | — | 0 |
| POCGOV | Coefficient for the geometry independent part of CGOV | F | 1e-15 |
| POCGOVD | Coefficient for the geometry independent part of CGOV for drain side | F | 1e-15 |
| POCHIB | Coefficient for the geometry independent part of CHIB | V | 3.1 |
| POCOX | Coefficient for the geometry independent part of COX | F | 1e-14 |
| POCS | Coefficient for the geometry independent part of CS | — | 0 |
| POCT | Coefficient for the geometry independent part of CT | — | 0 |
| POCTEDGE | Coefficient for the geometry independent part of CTEDGE | — | 0 |
| PODELVTAC | Coefficient for the geometry independent part of DELVTAC | V | 0 |
| PODNSUB | Coefficient for the geometry independent part of DNSUB | $V^{-1}$ | 0 |
| PODPHIB | Coefficient for the geometry independent part of DPHIB | V | 0 |
| PODPHIBEDGE | Coefficient for the geometry independent part of DPHIBEDGE | V | 0 |
| PODVSBNUD | Coefficient for the geometry independent part of DVSBNUD | V | 1 |
| POEF | Coefficient for the flicker noise frequency exponent | — | 1 |
| POEFEDGE | Coefficient for the geometry independent part of EFEDGE | — | 1 |

Table 2.89: PSP103VA MOSFET Device Model Parameters

| Parameter | Description | Units | Default |
|---|---|---|---|
| POEPSROX | Coefficient for the geometry independent part of EPSOX | — | 3.9 |
| POFACNEFFAC | Coefficient for the geometry independent part of FACNEFFAC | — | 1 |
| POFETA | Coefficient for the geometry independent part of FETA | — | 1 |
| POFNT | Coefficient for the geometry independent part of FNT | — | 1 |
| POFNTEDGE | Coefficient for the geometry independent part of FNTEDGE | — | 1 |
| POFNTEXC | Coefficient for the geometry independent part of FNTEXC | — | 0 |
| POGC2 | Coefficient for the geometry independent part of GC2 | — | 0.375 |
| POGC3 | Coefficient for the geometry independent part of GC3 | — | 0.063 |
| POGCO | Coefficient for the geometry independent part of GCO | — | 0 |
| POGFACNUD | Coefficient for the geometry independent part of GFACNUD | — | 1 |
| POIGINV | Coefficient for the geometry independent part of IGINV | A | 0 |
| POIGOV | Coefficient for the geometry independent part of IGOV | A | 0 |
| POIGOVD | Coefficient for the geometry independent part of IGOV for drain side | A | 0 |
| POKUOWE | Coefficient for the geometry independent part of KUOWE | — | 0 |
| POKVTHOWE | Coefficient for the geometry independent part of KVTHOWE | — | 0 |
| POMUE | Coefficient for the geometry independent part of MUE | m/V | 0.5 |
| PONEFF | Coefficient for the geometry independent part of NEFF | $m^{-3}$ | 5e+23 |
| PONEFFEDGE | Coefficient for the geometry independent part of NEFFEDGE | $m^{-3}$ | 5e+23 |
| PONFA | Coefficient for the geometry independent part of NFA | — | 8e+22 |
| PONFAEDGE | Coefficient for the geometry independent part of NFAEDGE | — | 8e+22 |
| PONFB | Coefficient for the geometry independent part of NFB | — | 3e+07 |

Table 2.89: PSP103VA MOSFET Device Model Parameters

| Parameter | Description | Units | Default |
|---|---|---|---|
| PONFBEDGE | Coefficient for the geometry independent part of NFBEDGE | — | 3e+07 |
| PONFC | Coefficient for the geometry independent part of NFC | $V^{-1}$ | 0 |
| PONFCEDGE | Coefficient for the geometry independent part of NFCEDGE | $V^{-1}$ | 0 |
| PONOV | Coefficient for the geometry independent part of NOV | $m^{-3}$ | 5e+25 |
| PONOVD | Coefficient for the geometry independent part of NOV for drain side | $m^{-3}$ | 5e+25 |
| PONP | Coefficient for the geometry independent part of NP | $m^{-3}$ | 1e+26 |
| PONSLP | Coefficient for the geometry independent part of NSLP | V | 0.05 |
| POPSCE | Coefficient for the geometry independent part of PSCE | — | 0 |
| POPSCEB | Coefficient for the geometry independent part of PSCEB | $V^{-1}$ | 0 |
| POPSCEBEDGE | Coefficient for the geometry independent part of PSCEBEDGE | $V^{-1}$ | 0 |
| POPSCED | Coefficient for the geometry independent part of PSCED | $V^{-1}$ | 0 |
| POPSCEDEDGE | Coefficient for the geometry independent part of PSCEDEDGE | $V^{-1}$ | 0 |
| POPSCEEDGE | Coefficient for the geometry independent part of PSCEEDGE | — | 0 |
| PORS | Coefficient for the geometry independent part of RS | Ω | 30 |
| PORSB | Coefficient for the geometry independent part of RSB | $V^{-1}$ | 0 |
| PORSG | Coefficient for the geometry independent part of RSG | $V^{-1}$ | 0 |
| POSTA2 | Coefficient for the geometry independent part of STA2 | V | 0 |
| POSTBET | Coefficient for the geometry independent part of STBET | — | 1 |
| POSTBETEDGE | Coefficient for the geometry independent part of STBETEDGE | — | 1 |
| POSTBGIDL | Coefficient for the geometry independent part of STBGIDL | V/K | 0 |
| POSTBGIDLD | Coefficient for the geometry independent part of STBGIDL for drain side | V/K | 0 |

Table 2.89: PSP103VA MOSFET Device Model Parameters

| Parameter | Description | Units | Default |
|---|---|---|---|
| POSTCS | Coefficient for the geometry independent part of STCS | — | 0 |
| POSTIG | Coefficient for the geometry independent part of STIG | — | 2 |
| POSTMUE | Coefficient for the geometry independent part of STMUE | — | 0 |
| POSTRS | Coefficient for the geometry independent part of STRS | — | 1 |
| POSTTHEMU | Coefficient for the geometry independent part of STTHEMU | — | 1.5 |
| POSTTHESAT | Coefficient for the geometry independent part of STTHESAT | — | 1 |
| POSTVFB | Coefficient for the geometry independent part of STVFB | V/K | 0.0005 |
| POSTVFBEDGE | Coefficient for the geometry independent part of STVFBEDGE | V/K | 0 |
| POSTXCOR | Coefficient for the geometry independent part of STXCOR | — | 0 |
| POTHEMU | Coefficient for the geometry independent part of THEMU | — | 1.5 |
| POTHESAT | Coefficient for the geometry independent part of THESAT | $V^{-1}$ | 1 |
| POTHESATB | Coefficient for the geometry independent part of THESATB | $V^{-1}$ | 0 |
| POTHESATG | Coefficient for the geometry independent part of THESATG | $V^{-1}$ | 0 |
| POTOX | Coefficient for the geometry independent part of TOX | m | 2e-09 |
| POTOXOV | Coefficient for the geometry independent part of TOXOV | m | 2e-09 |
| POTOXOVD | Coefficient for the geometry independent part of TOXOV for drain side | m | 2e-09 |
| POVFB | Coefficient for the geometry independent part of VFB | V | -1 |
| POVFBEDGE | Coefficient for the geometry independent part of VFBEDGE | V | -1 |
| POVNSUB | Coefficient for the geometry independent part of VNSUB | V | 0 |
| POVP | Coefficient for the geometry independent part of VP | V | 0.05 |
| POVSBNUD | Coefficient for the geometry independent part of VSBNUD | V | 0 |

Table 2.89: PSP103VA MOSFET Device Model Parameters

| Parameter | Description | Units | Default |
|---|---|---|---|
| POXCOR | Coefficient for the geometry independent part of XCOR | $V^{-1}$ | 0 |
| PSCE | Subthreshold slope coefficient for short channel transistor | — | 0 |
| PSCEB | Bulk voltage dependence parameter of subthreshold slope coefficient for short channel transistor | $V^{-1}$ | 0 |
| PSCEBEDGE | Bulk voltage dependence parameter of subthreshold slope coefficient for short channel edge transistors | $V^{-1}$ | 0 |
| PSCEBEDGEO | Bulk voltage dependence parameter of subthreshold slope coefficient for short channel edge transistors | $V^{-1}$ | 0 |
| PSCEBO | Bulk voltage dependence parameter of subthreshold slope coefficient for short channel transistor | $V^{-1}$ | 0 |
| PSCED | Drain voltage dependence parameter of subthreshold slope coefficient for short channel transistor | $V^{-1}$ | 0 |
| PSCEDEDGE | Drain voltage dependence parameter of subthreshold slope coefficient for short channel edge transistors | $V^{-1}$ | 0 |
| PSCEDEDGEO | Drain voltage dependence parameter of subthreshold slope coefficient for short channel edge transistors | $V^{-1}$ | 0 |
| PSCEDO | Drain voltage dependence parameter of subthreshold slope coefficient for short channel transistor | $V^{-1}$ | 0 |
| PSCEEDGE | Subthreshold slope coefficient for short channel edge transistors | — | 0 |
| PSCEEDGEL | Length dependence of subthreshold slope coefficient for short channel edge transistors | — | 0 |
| PSCEEDGELEXP | Exponent for length dependence of subthreshold slope coefficient for short channel edge transistors | — | 2 |
| PSCEEDGEW | Exponent for length dependence of subthreshold slope coefficient for short channel edge transistor | — | 0 |
| PSCEL | Length dependence of subthreshold slope coefficient for short channel transistor | — | 0 |
| PSCELEXP | Exponent for length dependence of subthreshold slope coefficient for short channel transistor | — | 2 |
| PSCEW | Exponent for length dependence of subthreshold slope coefficient for short channel transistor | — | 0 |

Table 2.89: PSP103VA MOSFET Device Model Parameters

| Parameter | Description | Units | Default |
|---|---|---|---|
| PSTI | Grading coefficient of STI-edge component for source-bulk junction | — | 0.5 |
| PSTID | Grading coefficient of STI-edge component for drain-bulk junction | — | 0.5 |
| PWA1 | Coefficient for the width dependence of A1 | — | 0 |
| PWA3 | Coefficient for the width dependence of A3 | — | 0 |
| PWA4 | Coefficient for the width dependence of A4 | $V^{-1/2}$ | 0 |
| PWAGIDL | Coefficient for the width dependence of AGIDL | $A/V^3$ | 0 |
| PWAGIDLD | Coefficient for the width dependence of AGIDL for drain side | $A/V^3$ | 0 |
| PWALP | Coefficient for the width dependence of ALP | — | 0 |
| PWALP1 | Coefficient for the width dependence of ALP1 | V | 0 |
| PWALP2 | Coefficient for the width dependence of ALP2 | $V^{-1}$ | 0 |
| PWAX | Coefficient for the width dependence of AX | — | 0 |
| PWBETN | Coefficient for the width dependence of BETN | $m^2/(Vs)$ | 0 |
| PWBETNEDGE | Coefficient for the width dependence of BETNEDGE | $m^2/(Vs)$ | 0 |
| PWCF | Coefficient for the width dependence of CF | — | 0 |
| PWCFEDGE | Coefficient for the width dependence of CFEDGE | — | 0 |
| PWCFR | Coefficient for the width dependence of CFR | F | 0 |
| PWCFRD | Coefficient for the width dependence of CFR for drain side | F | 0 |
| PWCGBOV | Coefficient for the width dependence of CGBOV | F | 0 |
| PWCGOV | Coefficient for the width dependence of CGOV | F | 0 |
| PWCGOVD | Coefficient for the width dependence of CGOV for drain side | F | 0 |
| PWCOX | Coefficient for the width dependence of COX | F | 0 |
| PWCS | Coefficient for the width dependence of CS | — | 0 |
| PWCT | Coefficient for the width dependence of CT | — | 0 |
| PWCTEDGE | Coefficient for the width dependence of CTEDGE | — | 0 |
| PWDELVTAC | Coefficient for the width dependence of DELVTAC | V | 0 |
| PWDPHIB | Coefficient for the width dependence of DPHIB | V | 0 |
| PWDPHIBEDGE | Coefficient for the width dependence of DPHIBEDGE | V | 0 |
| PWFACNEFFAC | Coefficient for the width dependence of FACNEFFAC | — | 0 |
| PWFNTEXC | Coefficient for the width dependence of FNTEXC | — | 0 |

Table 2.89: PSP103VA MOSFET Device Model Parameters

| Parameter | Description | Units | Default |
|---|---|---|---|
| PWGFACNUD | Coefficient for the width dependence of GFACNUD | — | 0 |
| PWIGINV | Coefficient for the width dependence of IGINV | A | 0 |
| PWIGOV | Coefficient for the width dependence of IGOV | A | 0 |
| PWIGOVD | Coefficient for the width dependence of IGOV for drain side | A | 0 |
| PWKUOWE | Coefficient for the width dependence part of KUOWE | — | 0 |
| PWKVTHOWE | Coefficient for the width dependence part of KVTHOWE | — | 0 |
| PWMUE | Coefficient for the width dependence of MUE | m/V | 0 |
| PWNEFF | Coefficient for the width dependence of NEFF | $m^{-3}$ | 0 |
| PWNEFFEDGE | Coefficient for the width dependence of NEFFEDGE | $m^{-3}$ | 0 |
| PWNFA | Coefficient for the width dependence of NFA | — | 0 |
| PWNFAEDGE | Coefficient for the width dependence of NFAEDGE | — | 0 |
| PWNFB | Coefficient for the width dependence of NFB | — | 0 |
| PWNFBEDGE | Coefficient for the width dependence of NFBEDGE | — | 0 |
| PWNFC | Coefficient for the width dependence of NFC | $V^{-1}$ | 0 |
| PWNFCEDGE | Coefficient for the width dependence of NFCEDGE | $V^{-1}$ | 0 |
| PWNOV | Coefficient for the width dependence of NOV | $m^{-3}$ | 0 |
| PWNOVD | Coefficient for the width dependence of NOV for drain side | $m^{-3}$ | 0 |
| PWNP | Coefficient for the width dependence of NP | $m^{-3}$ | 0 |
| PWPSCE | Coefficient for the width dependence of PSCE | — | 0 |
| PWPSCEEDGE | Coefficient for the width dependence of PSCEEDGE | — | 0 |
| PWRS | Coefficient for the width dependence of RS | Ω | 0 |
| PWSTBET | Coefficient for the width dependence of STBET | — | 0 |
| PWSTBETEDGE | Coefficient for the width dependence of STBETEDGE | — | 0 |
| PWSTTHESAT | Coefficient for the width dependence of STTHESAT | — | 0 |
| PWSTVFB | Coefficient for the width dependence of STVFB | V/K | 0 |
| PWSTVFBEDGE | Coefficient for the width dependence of STVFBEDGE | V/K | 0 |

Table 2.89: PSP103VA MOSFET Device Model Parameters

| Parameter | Description | Units | Default |
|---|---|---|---|
| PWTHESAT | Coefficient for the width dependence of THESAT | $V^{-1}$ | 0 |
| PWTHESATB | Coefficient for the width dependence of THESATB | $V^{-1}$ | 0 |
| PWTHESATG | Coefficient for the width dependence of THESATG | $V^{-1}$ | 0 |
| PWVFB | Coefficient for the width dependence of VFB | V | 0 |
| PWXCOR | Coefficient for the width dependence of XCOR | $V^{-1}$ | 0 |
| QMC | Quantum-mechanical correction factor | — | 1 |
| RBULK | Bulk resistance between node BP and BI | Ω | 0 |
| RBULKO | Bulk resistance between node BP and BI | Ω | 0 |
| RDE | External drain resistance | Ω | 0 |
| RG | Gate resistance | Ω | 0 |
| RGO | Gate resistance | Ω | 0 |
| RINT | Contact resistance between silicide and ploy | $\Omega\ m^2$ | 0 |
| RJUND | Drain-side bulk resistance between node BI and BD | Ω | 0 |
| RJUNDO | Drain-side bulk resistance between node BI and BD | Ω | 0 |
| RJUNS | Source-side bulk resistance between node BI and BS | Ω | 0 |
| RJUNSO | Source-side bulk resistance between node BI and BS | Ω | 0 |
| RS | Series resistance at TR | Ω | 30 |
| RSB | Back-bias dependence of series resistance | $V^{-1}$ | 0 |
| RSBO | Back-bias dependence of series resistance | $V^{-1}$ | 0 |
| RSE | External source resistance | Ω | 0 |
| RSG | Gate-bias dependence of series resistance | $V^{-1}$ | 0 |
| RSGO | Gate-bias dependence of series resistance | $V^{-1}$ | 0 |
| RSH | Sheet resistance of source diffusion | Ω/□ | 0 |
| RSHD | Sheet resistance of drain diffusion | Ω/□ | 0 |
| RSHG | Gate electrode diffusion sheet resistance | Ω/□ | 0 |
| RSW1 | Source/drain series resistance for 1 um wide channel at TR | Ω | 50 |
| RSW2 | Higher-order width scaling of RS | — | 0 |
| RVPOLY | Vertical poly resistance | $\Omega\ m^2$ | 0 |
| RWELL | Well resistance between node BI and B | Ω | 0 |
| RWELLO | Well resistance between node BI and B | Ω | 0 |

Table 2.89: PSP103VA MOSFET Device Model Parameters

| Parameter | Description | Units | Default |
|---|---|---|---|
| SAREF | Reference distance between OD-edge and poly from one side | m | 1e-06 |
| SBREF | Reference distance between OD-edge and poly from other side | m | 1e-06 |
| SCREF | Distance between OD-edge and well edge of a reference device | m | 1e-06 |
| STA2 | Temperature dependence of A2 | V | 0 |
| STA2O | Temperature dependence of A2 | V | 0 |
| STBET | Temperature dependence of BETN | — | 1 |
| STBETEDGE | Temperature dependence of BETNEDGE | — | 1 |
| STBETEDGEL | Length dependence of temperature dependence of BETNEDGE | — | 0 |
| STBETEDGELW | Area dependence of temperature dependence of BETNEDGE | — | 0 |
| STBETEDGEO | Geometry independent temperature dependence of BETNEDGE | — | 1 |
| STBETEDGEW | Width dependence of temperature dependence of BETNEDGE | — | 0 |
| STBETL | Length dependence of temperature dependence of BETN | — | 0 |
| STBETLW | Area dependence of temperature dependence of BETN | — | 0 |
| STBETO | Geometry independent temperature dependence of BETN | — | 1 |
| STBETW | Width dependence of temperature dependence of BETN | — | 0 |
| STBGIDL | Temperature dependence of BGIDL | V/K | 0 |
| STBGIDLD | Temperature dependence of BGIDL for drain side | V/K | 0 |
| STBGIDLDO | Temperature dependence of BGIDL for drain side | V/K | 0 |
| STBGIDLO | Temperature dependence of BGIDL | V/K | 0 |
| STCS | Temperature dependence of CS | — | 0 |
| STCSO | Temperature dependence of CS | — | 0 |
| STETAO | Eta0 shift factor related to VTHO change | m | 0 |
| STFBBTBOT | Temperature scaling parameter for band-to-band tunneling of bottom component for source-bulk junction | 1/K | -0.001 |
| STFBBTBOTD | Temperature scaling parameter for band-to-band tunneling of bottom component for drain-bulk junction | 1/K | -0.001 |

Table 2.89: PSP103VA MOSFET Device Model Parameters

| Parameter | Description | Units | Default |
|---|---|---|---|
| STFBBTGAT | Temperature scaling parameter for band-to-band tunneling of gate-edge component for source-bulk junction | 1/K | -0.001 |
| STFBBTGATD | Temperature scaling parameter for band-to-band tunneling of gate-edge component for drain-bulk junction | 1/K | -0.001 |
| STFBBTSTI | Temperature scaling parameter for band-to-band tunneling of STI-edge component for source-bulk junction | 1/K | -0.001 |
| STFBBTSTID | Temperature scaling parameter for band-to-band tunneling of STI-edge component for drain-bulk junction | 1/K | -0.001 |
| STIG | Temperature dependence of IGINV and IGOV | — | 2 |
| STIGO | Temperature dependence of IGINV and IGOV | — | 2 |
| STMUE | Temperature dependence of MUE | — | 0 |
| STMUEO | Temperature dependence of MUE | — | 0 |
| STRS | Temperature dependence of RS | — | 1 |
| STRSO | Temperature dependence of RS | — | 1 |
| STTHEMU | Temperature dependence of THEMU | — | 1.5 |
| STTHEMUO | Temperature dependence of THEMU | — | 1.5 |
| STTHESAT | Temperature dependence of THESAT | — | 1 |
| STTHESATL | Length dependence of temperature dependence of THESAT | — | 0 |
| STTHESATLW | Area dependence of temperature dependence of THESAT | — | 0 |
| STTHESATO | Geometry independent temperature dependence of THESAT | — | 1 |
| STTHESATW | Width dependence of temperature dependence of THESAT | — | 0 |
| STVFB | Temperature dependence of VFB | V/K | 0.0005 |
| STVFBEDGE | Temperature dependence of VFBEDGE | V/K | 0.0005 |
| STVFBEDGEL | Length dependence of temperature dependence of VFBEDGE | V/K | 0 |
| STVFBEDGELW | Area dependence of temperature dependence of VFBEDGE | V/K | 0 |
| STVFBEDGEO | Geometry-independent temperature dependence of VFBEDGE | V/K | 0.0005 |
| STVFBEDGEW | Width dependence of temperature dependence of VFBEDGE | V/K | 0 |

Table 2.89: PSP103VA MOSFET Device Model Parameters

| Parameter | Description | Units | Default |
|---|---|---|---|
| STVFBL | Length dependence of temperature dependence of VFB | V/K | 0 |
| STVFBLW | Area dependence of temperature dependence of VFB | V/K | 0 |
| STVFBO | Geometry-independent temperature dependence of VFB | V/K | 0.0005 |
| STVFBW | Width dependence of temperature dependence of VFB | V/K | 0 |
| STXCOR | Temperature dependence of XCOR | — | 0 |
| STXCORO | Temperature dependence of XCOR | — | 0 |
| SWDELVTAC | Flag for separate capacitance calculation; 0=off, 1=on | — | 0 |
| SWEDGE | Flag for drain current of edge transistors; 0=off, 1=on | — | 0 |
| SWGEO | Flag for geometrical model, 0=local, 1=global, 2=binning | — | 1 |
| SWGIDL | Flag for GIDL current, 0=turn off IGIDL | — | 0 |
| SWIGATE | Flag for gate current, 0=turn off IG | — | 0 |
| SWIGN | Flag for induced gate noise; 0=off, 1=on | — | 1 |
| SWIMPACT | Flag for impact ionization current, 0=turn off II | — | 0 |
| SWJUNASYM | Flag for asymmetric junctions; 0=symmetric, 1=asymmetric | — | 0 |
| SWJUNCAP | Flag for juncap, 0=turn off juncap | — | 0 |
| SWJUNEXP | Flag for JUNCAP-express; 0=full model, 1=express model | — | 0 |
| SWNUD | Flag for NUD-effect; 0=off, 1=on, 2=on+CV-correction | — | 0 |
| THEMU | Mobility reduction exponent at TR | — | 1.5 |
| THEMUO | Mobility reduction exponent at TR | — | 1.5 |
| THESAT | Velocity saturation parameter at TR | $V^{-1}$ | 1 |
| THESATB | Back-bias dependence of velocity saturation | $V^{-1}$ | 0 |
| THESATBO | Back-bias dependence of velocity saturation | $V^{-1}$ | 0 |
| THESATG | Gate-bias dependence of velocity saturation | $V^{-1}$ | 0 |
| THESATGO | Gate-bias dependence of velocity saturation | $V^{-1}$ | 0 |
| THESATL | Length dependence of THESAT | $V^{-1}$ | 0.05 |
| THESATLEXP | Exponent for length dependence of THESAT | — | 1 |
| THESATLW | Area dependence of velocity saturation parameter | — | 0 |

Table 2.89: PSP103VA MOSFET Device Model Parameters

| Parameter | Description | Units | Default |
|---|---|---|---|
| THESATO | Geometry independent velocity saturation parameter at TR | $V^{-1}$ | 0 |
| THESATW | Width dependence of velocity saturation parameter | — | 0 |
| TKUO | Temperature dependence of KUO | — | 0 |
| TOX | Gate oxide thickness | m | 2e-09 |
| TOXO | Gate oxide thickness | m | 2e-09 |
| TOXOV | Overlap oxide thickness | m | 2e-09 |
| TOXOVD | Overlap oxide thickness for drain side | m | 2e-09 |
| TOXOVDO | Overlap oxide thickness for drain side | m | 2e-09 |
| TOXOVO | Overlap oxide thickness | m | 2e-09 |
| TR | nominal (reference) temperature | °C | 21 |
| TRJ | Reference temperature | °C | 21 |
| TYPE | Channel type parameter, +1=NMOS -1=PMOS | — | 1 |
| UO | Zero-field mobility at TR | $m^2/(Vs)$ | 0.05 |
| VBIRBOT | Built-in voltage at the reference temperature of bottom component for source-bulk junction | V | 1 |
| VBIRBOTD | Built-in voltage at the reference temperature of bottom component for drain-bulk junction | V | 1 |
| VBIRGAT | Built-in voltage at the reference temperature of gate-edge component for source-bulk junction | V | 1 |
| VBIRGATD | Built-in voltage at the reference temperature of gate-edge component for drain-bulk junction | V | 1 |
| VBIRSTI | Built-in voltage at the reference temperature of STI-edge component for source-bulk junction | V | 1 |
| VBIRSTID | Built-in voltage at the reference temperature of STI-edge component for drain-bulk junction | V | 1 |
| VBRBOT | Breakdown voltage of bottom component for source-bulk junction | V | 10 |
| VBRBOTD | Breakdown voltage of bottom component for drain-bulk junction | V | 10 |
| VBRGAT | Breakdown voltage of gate-edge component for source-bulk junction | V | 10 |
| VBRGATD | Breakdown voltage of gate-edge component for drain-bulk junction | V | 10 |
| VBRSTI | Breakdown voltage of STI-edge component for source-bulk junction | V | 10 |
| VBRSTID | Breakdown voltage of STI-edge component for drain-bulk junction | V | 10 |

Table 2.89: PSP103VA MOSFET Device Model Parameters

| Parameter | Description | Units | Default |
|---|---|---|---|
| VFB | Flat band voltage at TR | V | -1 |
| VFBEDGE | Flat band voltage of edge transistors at TR | V | -1 |
| VFBEDGEO | Geometry-independent flat-band voltage of edge transistors at TR | V | -1 |
| VFBL | Length dependence of flat-band voltage | V | 0 |
| VFBLW | Area dependence of flat-band voltage | V | 0 |
| VFBO | Geometry-independent flat-band voltage at TR | V | -1 |
| VFBW | Width dependence of flat-band voltage | V | 0 |
| VJUNREF | Typical maximum source-bulk junction voltage; usually about 2*VSUP | V | 2.5 |
| VJUNREFD | Typical maximum drain-bulk junction voltage; usually about 2*VSUP | V | 2.5 |
| VNSUB | Effective doping bias-dependence parameter | V | 0 |
| VNSUBO | Effective doping bias-dependence parameter | V | 0 |
| VP | CLM logarithm dependence factor | V | 0.05 |
| VPO | CLM logarithmic dependence parameter | V | 0.05 |
| VSBNUD | Lower Vsb value for NUD-effect | V | 0 |
| VSBNUDO | Lower Vsb value for NUD-effect | V | 0 |
| WBET | Characteristic width for width scaling of BETN | m | 1e-09 |
| WEB | Coefficient for SCB | — | 0 |
| WEC | Coefficient for SCC | — | 0 |
| WEDGE | Electrical width of edge transistor per side | m | 1e-08 |
| WEDGEW | Width dependence of edge WEDGE | — | 0 |
| WKUO | Width dependence of KUO | — | 0 |
| WKVTHO | Width dependence of KVTHO | — | 0 |
| WLOD | Width parameter | m | 0 |
| WLODKUO | Width parameter for UO stress effect | — | 0 |
| WLODVTH | Width parameter for VTH-stress effect | — | 0 |
| WMAX | Dummy parameter to label binning set | m | 1 |
| WMIN | Dummy parameter to label binning set | m | 0 |
| WOT | Effective channel width reduction per side | m | 0 |
| WSEG | Char. length of segregation of background doping NSUBO | m | 1e-08 |
| WSEGP | Char. length of segregation of pocket doping NPCK | m | 1e-08 |
| WVARL | Length dependence of WVAR | — | 0 |

Table 2.89: PSP103VA MOSFET Device Model Parameters

| Parameter | Description | Units | Default |
|---|---|---|---|
| WVARO | Geom. independent difference between actual and programmed field-oxide opening | m | 0 |
| WVARW | Width dependence of WVAR | — | 0 |
| XCOR | Non-universality factor | $V^{-1}$ | 0 |
| XCORL | Length dependence of non-universality parameter | — | 0 |
| XCORLW | Area dependence of non-universality parameter | — | 0 |
| XCORO | Geometry independent non-universality parameter | $V^{-1}$ | 0 |
| XCORW | Width dependence of non-universality parameter | — | 0 |
| XJUNGAT | Junction depth of gate-edge component for source-bulk junction | m | 1e-07 |
| XJUNGATD | Junction depth of gate-edge component for drain-bulk junction | m | 1e-07 |
| XJUNSTI | Junction depth of STI-edge component for source-bulk junction | m | 1e-07 |
| XJUNSTID | Junction depth of STI-edge component for drain-bulk junction | m | 1e-07 |

## Level 110 MOSFET Tables (BSIM CMG version 110.0.0)

**Xyce** includes the BSIM CMG Common Multi-gate model version 110. The code in **Xyce** was generated from the BSIM group's Verilog-A input using the default "ifdef" lines provided, and therefore supports only the subset of BSIM CMG features those defaults enable. Instance and model parameters for the BSIM CMG model are given in tables 2.90 and 2.91. Details of the model are documented in the BSIM-CMG technical report[26], available from the BSIM web site at `http://bsim.berkeley.edu/models/bsimcmg/`.

Table 2.90: BSIM-CMG FINFET v110.0.0 Device Instance Parameters

| Parameter | Description | Units | Default |
|---|---|---|---|
| ADEJ | Drain junction area (BULKMOD=1 or 2) | $m^2$ | 0 |
| ADEO | Drain-to-substrate overlap area through oxide | $m^2$ | 0 |
| ASEJ | Source junction area (BULKMOD=1 or 2) | $m^2$ | 0 |
| ASEO | Source-to-substrate overlap area through oxide | $m^2$ | 0 |
| CDSP | Constant drain-to-source fringe capacitance (all CGEOMOD) | F | 0 |
| CGDP | Constant gate-to-drain fringe capacitance (CGEOMOD=1) | — | 0 |
| CGSP | Constant gate-to-source fringe capacitance (CGEOMOD=1) | — | 0 |
| COVD | Constant gate-to-drain overlap capacitance (CGEOMOD=1) | — | 0 |
| COVS | Constant gate-to-source overlap capacitance (CGEOMOD=1) | — | 0 |
| D | Diameter of the cylinder (GEOMOD=3) | m | 4e-08 |
| FPITCH | Fin pitch | m | 8e-08 |
| L | Designed gate length | m | 3e-08 |
| LRSD | Length of the source/drain | m | 0 |
| M | multiplicity factor | — | 1 |
| NF | Number of fingers | — | 1 |
| NFIN | Number of fins per finger (real number enables optimization) | — | 1 |
| NFINNOM | Nominal number of fins per finger | — | 1 |
| NGCON | Number of gate contact (1 or 2 sided) | — | 1 |
| NRD | Number of source diffusion squares | — | 0 |
| NRS | Number of source diffusion squares | — | 0 |
| PDEJ | Drain-to-substrate PN junction perimeter (BULKMOD=1 or 2) | m | 0 |
| PDEO | Perimeter of drain-to-substrate overlap region through oxide | m | 0 |

Table 2.90: BSIM-CMG FINFET v110.0.0 Device Instance Parameters

| Parameter | Description | Units | Default |
|---|---|---|---|
| PSEJ | Source-to-substrate PN junction perimeter (BULKMOD=1 or 2) | m | 0 |
| PSEO | Perimeter of source-to-substrate overlap region through oxide | m | 0 |
| TFIN | Body (fin) thickness | m | 1.5e-08 |

Table 2.91: BSIM-CMG FINFET v110.0.0 Device Model Parameters

| Parameter | Description | Units | Default |
|---|---|---|---|
| A1 | Non-saturation effect parameter for strong inversion Region | — | 0 |
| A11 | Temperature dependence of A1 | — | 0 |
| A2 | Non-saturation effect parameter for moderate Inversion Region | — | 0 |
| A21 | Temperature dependence of A2 | — | 0 |
| ACH_UFCM | Area of the channel for the unified Model | $m^2$ | 1 |
| ADEJ | Drain junction area (BULKMOD=1 or 2) | $m^2$ | 0 |
| ADEO | Drain-to-substrate overlap area through oxide | $m^2$ | 0 |
| ADVTP0 | Pre-exponential coefficient for DITS | — | 0 |
| ADVTP1 | Pre-exponential coefficient for DVTP1 | — | 0 |
| AEU | Pre-exponential coefficient for EU | — | 0 |
| AEUR | Reverse-mode pre-exponential coefficient for EU | — | 0 |
| AGIDL | Pre-exponential coefficient for GIDL | — | 0 |
| AGISL | Pre-exponential coefficient for GISL | — | 6.055e-12 |
| AIGBACC | Parameter for Igb in accumulation | — | 0.0136 |
| AIGBACC1 | Parameter for Igb in accumulation | — | 0 |
| AIGBINV | Parameter for Igb in inversion | — | 0.0111 |
| AIGBINV1 | Parameter for Igb in inversion | — | 0 |
| AIGC | Parameter for Igc in inversion | — | 0.0136 |
| AIGC1 | Parameter for Igc in inversion | — | 0 |
| AIGD | Parameter for Igd in inversion | — | 0 |
| AIGD1 | Parameter for Igd in inversion | — | 0 |
| AIGEN | Thermal generation current parameter | — | 0 |
| AIGS | Parameter for Igs in inversion | — | 0.0136 |
| AIGS1 | Parameter for Igs in inversion | — | 0 |

Table 2.91: BSIM-CMG FINFET v110.0.0 Device Model Parameters

| Parameter | Description | Units | Default |
|---|---|---|---|
| ALPHA0 | First parameter of Iii | m/V | 0 |
| ALPHA01 | Temperature dependence of ALPHA0 | — | 0 |
| ALPHA1 | L scaling parameter of Iii | $V^{-1}$ | 0 |
| ALPHA11 | Temperature dependence ALPHA1 | — | 0 |
| ALPHA_UFCM | Mobile charge scaling term taking QM effects into account | — | 0.5556 |
| ALPHAII0 | First parameter of Iii for IIMOD=2 | m/V | 0 |
| ALPHAII01 | Temperature dependence of ALPHAII0 | — | 0 |
| ALPHAII1 | L scaling parameter of Iii for IIMOD=2 | $V^{-1}$ | 0 |
| ALPHAII11 | Temperature dependence of ALPHAII1 | — | 0 |
| AMEXP | Pre-exponential coefficient for MEXP | — | 0 |
| AMEXPR | Pre-exponential coefficient for MEXPR | — | 0 |
| APCLM | Pre-exponential coefficient for PCLM | — | 0 |
| APCLMR | Reverse-mode pre-exponential coefficient for PCLM | — | 0 |
| APSAT | Pre-exponential coefficient for PSAT | — | 0 |
| APSATCV | Pre-exponential coefficient for PSATCV | — | 0 |
| APTWG | Pre-exponential coefficient for PTWG | — | 0 |
| AQMTCEN | Parameter for geometric dependence of Tcen on R/TFIN/HFIN | — | 0 |
| ARDSW | Pre-exponential coefficient for RDSW | — | 0 |
| ARDW | Pre-exponential coefficient for RDW | — | 0 |
| ARSDEND | Extra raised source/drain cross sectional areaat the two ends of the FinFET | $m^2$ | 0 |
| ARSW | Pre-exponential coefficient for RSW | — | 0 |
| ASEJ | Source junction area (BULKMOD=1 or 2) | $m^2$ | 0 |
| ASEO | Source-to-substrate overlap area through oxide | $m^2$ | 0 |
| ASHEXP | Exponent to tune RTH dependence of NFINTOTAL | — | 1 |
| ASILIEND | Extra silicide cross sectional area at the two ends of the FinFET | $m^2$ | 0 |
| ASYMMOD | 0: Turn off asymmetry model - forward mode parameters used; 1: Turn on asymmetry model | — | 0 |
| AT | Saturation velocity temperature coefficient | — | -0.00156 |
| ATCV | Saturation velocity temperature coefficient for CV | — | 0 |
| ATR | Reverse-mode saturation velocity temperature coefficient | — | 0 |

Table 2.91: BSIM-CMG FINFET v110.0.0 Device Model Parameters

| Parameter | Description | Units | Default |
|---|---|---|---|
| AUA | Pre-exponential coefficient for UA | — | 0 |
| AUAR | Reverse-mode pre-exponential coefficient for UA | — | 0 |
| AUD | Pre-exponential coefficient for UD | — | 0 |
| AUDR | Reverse-mode pre-exponential coefficient for UD | — | 0 |
| AVSAT | Pre-exponential coefficient for VSAT | — | 0 |
| AVSAT1 | Pre-exponential coefficient for VSAT1 | — | 0 |
| AVSATCV | Pre-exponential coefficient for VSATCV | — | 0 |
| BDVTP0 | Exponential coefficient for DITS | — | 1e-07 |
| BDVTP1 | Exponential coefficient for DVTP1 | — | 1e-07 |
| BETA0 | Vds dependence parameter of Iii | $V^{-1}$ | 0 |
| BETAII0 | Vds dependence parameter of Iii | $V^{-1}$ | 0 |
| BETAII1 | Vds dependence parameter of Iii | — | 0 |
| BETAII2 | Vds dependence parameter of Iii | V | 0.1 |
| BEU | Exponential coefficient for EU | — | 1e-07 |
| BEUR | Reverse-mode exponential coefficient for EU | — | 0 |
| BG0SUB | Bandgap of substrate at 300.15K | — | 1.12 |
| BGIDL | Exponential coefficient for GIDL | — | 0 |
| BGISL | Exponential coefficient for GISL | — | 3e+08 |
| BIGBACC | Parameter for Igb in accumulation | — | 0.00171 |
| BIGBINV | Parameter for Igb in inversion | — | 0.000949 |
| BIGC | Parameter for Igc in inversion | — | 0.00171 |
| BIGD | Parameter for Igd in inversion | — | 0 |
| BIGEN | Thermal generation current parameter | — | 0 |
| BIGS | Parameter for Igs in inversion | — | 0.00171 |
| BMEXP | Exponential coefficient for MEXP | — | 1 |
| BMEXPR | Exponential coefficient for MEXPR | — | 0 |
| BPCLM | Exponential coefficient for PCLM | — | 1e-07 |
| BPCLMR | Reverse-mode exponential coefficient for PCLM | — | 0 |
| BPSAT | Exponential coefficient for PSAT | — | 1 |
| BPSATCV | Exponential coefficient for PSATCV | — | 0 |
| BPTWG | Exponential coefficient for PTWG | — | 1e-07 |
| BQMTCEN | Parameter for geometric dependence of Tcen on R/TFIN/HFIN | — | 1.2e-08 |
| BRDSW | exponential coefficient for RDSW | — | 1e-07 |

Table 2.91: BSIM-CMG FINFET v110.0.0 Device Model Parameters

| Parameter | Description | Units | Default |
|---|---|---|---|
| BRDW | Exponential coefficient for RDW | — | 1e-07 |
| BRSW | Exponential coefficient for RSW | — | 1e-07 |
| BSHEXP | Exponent to tune RTH dependence of NF | — | 1 |
| BUA | Exponential coefficient for UA | — | 1e-07 |
| BUAR | Reverse-mode exponential coefficient for UAR | — | 0 |
| BUD | Exponential coefficient for UD | — | 5e-08 |
| BUDR | Reverse-mode exponential coefficient for UD | — | 0 |
| BULKMOD | 0: SOI multi-gate; 1: Bulk multi-gate; 2: for decoupled bulk multi-gate | — | 0 |
| BVD | Drain diode breakdown voltage | V | 0 |
| BVS | Source diode breakdown voltage | V | 10 |
| BVSAT | Exponential coefficient for VSAT | — | 1e-07 |
| BVSAT1 | Exponential coefficient for VSAT1 | — | 0 |
| BVSATCV | Exponential coefficient for VSATCV | — | 0 |
| CDSC | Coupling capacitance between S/D and channel | — | 0.007 |
| CDSCD | Drain-bias sensitivity of CDSC | — | 0.007 |
| CDSCDN1 | NFIN dependence of CDSCD | — | 0 |
| CDSCDN2 | NFIN dependence of CDSCD | — | 100000 |
| CDSCDR | Reverse-mode drain-bias sensitivity of CDSC | — | 0 |
| CDSCDRN1 | NFIN dependence of CDSCD | — | 0 |
| CDSCDRN2 | NFIN dependence of CDSCD | — | 0 |
| CDSCN1 | NFIN dependence of CDSC | — | 0 |
| CDSCN2 | NFIN dependence of CDSC | — | 100000 |
| CDSP | Constant drain-to-source fringe capacitance (all CGEOMOD) | F | 0 |
| CFD | Outer fringe capacitance at drain side | — | 0 |
| CFS | Outer fringe capacitance at source side | — | 2.5e-11 |
| CGBL | Bias dependent component of gate-to-substrate overlap capacitance per unit channel length per fin per finger | — | 0 |
| CGBN | Gate-to-substrate overlap capacitance per unit channel length per fin per finger | — | 0 |
| CGBO | Gate-to-substrate overlap capacitance per unit channel length per finger per NGCON | — | 0 |
| CGDL | Overlap capacitance between gate and lightly-doped drain region (for CGEOMOD = 0, 2) | — | 0 |

Table 2.91: BSIM-CMG FINFET v110.0.0 Device Model Parameters

| Parameter | Description | Units | Default |
|---|---|---|---|
| CGDO | Non LDD region drain-gate overlap capacitance per unit channel width | — | 0 |
| CGDP | Constant gate-to-drain fringe capacitance (CGEOMOD=1) | — | 0 |
| CGEO1SW | For CGEOMOD=1 only, this switch enables the parameters COVS, COVD, CGSP, and CGDP to be in F per fin, per gate-finger, per unit channel width | — | 0 |
| CGEOA | Fitting parameter for CGEOMOD=2 | — | 1 |
| CGEOB | Fitting parameter for CGEOMOD=2 | — | 0 |
| CGEOC | Fitting parameter for CGEOMOD=2 | — | 0 |
| CGEOD | Fitting parameter for CGEOMOD=2 | — | 0 |
| CGEOE | Fitting parameter for CGEOMOD=2 | — | 1 |
| CGEOMOD | Geometry-dependent parasitic capacitance model selector | — | 0 |
| CGIDL | Parameter for body-effect of GIDL | — | 0 |
| CGISL | Parameter for body-effect of GISL | — | 0.5 |
| CGSL | Overlap capacitance between gate and lightly-doped source region (for CGEOMOD = 0, 2) | — | 0 |
| CGSO | Non LDD region source-gate overlap capacitance per unit channel width | — | 0 |
| CGSP | Constant gate-to-source fringe capacitance (CGEOMOD=1) | — | 0 |
| CHARGEWF | Average channel charge weighting factor, +1: source-side, 0: middle, -1: drain-side | — | 0 |
| CIGBACC | Parameter for Igb in accumulation | $V^{-1}$ | 0.075 |
| CIGBINV | Parameter for Igb in inversion | $V^{-1}$ | 0.006 |
| CIGC | Parameter for Igc in inversion | $V^{-1}$ | 0.075 |
| CIGD | Parameter for Igd in inversion | $V^{-1}$ | 0 |
| CIGS | Parameter for Igs in inversion | $V^{-1}$ | 0.075 |
| CINS_UFCM | Insulator capacitance for the unified Model | — | 1 |
| CIT | Parameter for interface trap | — | 0 |
| CITR | Parameter for interface trap in reverse mode for asymmetric model | — | 0 |
| CJD | Unit area drain-side junction capacitance at zero bias | — | 0 |
| CJS | Unit area source-side junction capacitance at zero bias | — | 0.0005 |

Table 2.91: BSIM-CMG FINFET v110.0.0 Device Model Parameters

| Parameter | Description | Units | Default |
|---|---|---|---|
| CJSWD | Unit length drain-side sidewall junction capacitance at zero bias | — | 0 |
| CJSWGD | Unit length drain-side gate sidewall junction capacitance at zero bias | — | 0 |
| CJSWGS | Unit length source-side gate sidewall junction capacitance at zero bias | — | 0 |
| CJSWS | Unit length source-side sidewall junction capacitance at zero bias | — | 5e-10 |
| CKAPPAB | Bias dependent gate-to-substrate parasitic capacitance | — | 0.6 |
| CKAPPAD | Coefficient of bias-dependent overlap capacitance for the drain side (for CGEOMOD = 0, 2) | V | 0 |
| CKAPPAS | Coefficient of bias-dependent overlap capacitance for the source side (for CGEOMOD = 0, 2) | V | 0.6 |
| COVD | Constant gate-to-drain overlap capacitance (CGEOMOD=1) | — | 0 |
| COVS | Constant gate-to-source overlap capacitance (CGEOMOD=1) | — | 0 |
| CRATIO | Ratio of the corner area filled with silicon to the total corner area | — | 0.5 |
| CSDESW | Coefficient for source/drain-to-substrate sidewall capacitance | — | 0 |
| CTHO | Thermal capacitance | — | 1e-05 |
| D | Diameter of the cylinder (GEOMOD=3) | m | 4e-08 |
| DELTAPRSD | Change in silicon/silicide interface length due to non-rectangular epi | m | 0 |
| DELTAVSAT | velocity saturation parameter in the linear region | — | 1 |
| DELTAVSATCV | Velocity saturation parameter in the linear region for the capacitance model | — | 0 |
| DELTAW | Change of effective width due to shape of fin/cylinder | m | 0 |
| DELTAWCV | CV change of effective width due to shape of fin/cylinder | m | 0 |
| DELVFBACC | Change in flatband voltage: Vfb_accumulation - Vfb_inversion | V | 0 |
| DELVTRAND | Variability in Vth | V | 0 |
| DEVTYPE | 0: PMOS; 1: NMOS | — | 1 |
| DLBIN | Delta L for binning | m | 0 |

Table 2.91: BSIM-CMG FINFET v110.0.0 Device Model Parameters

| Parameter | Description | Units | Default |
|---|---|---|---|
| DLC | Delta L for C-V model | m | 0 |
| DLCACC | Delta L for C-V model in accumulation region (BULKMOD=1 or 2) | m | 0 |
| DLCIGD | Delta L for Igd model | m | 0 |
| DLCIGS | Delta L for Igs model | m | 0 |
| DROUT | L dependence of DIBL effect on Rout | — | 1.06 |
| DSUB | DIBL exponent coefficient | — | 1.06 |
| DTEMP | Variability in device temperature | °C | 0 |
| DVT0 | SCE coefficient | — | 0 |
| DVT1 | SCE exponent coefficient. After binning it should be within (0:inf) | — | 0.6 |
| DVT1SS | Subthreshold swing exponent coefficient. After binning it should be within (0:inf) | — | 0 |
| DVTP0 | Coefficient for drain-induced Vth shift (DITS) | — | 0 |
| DVTP1 | DITS exponent coefficient | — | 0 |
| DVTP2 | DITS model parameter | — | 0 |
| DVTSHIFT | Vth shift handle | V | 0 |
| DVTSHIFTR | Vth shift handle for asymmetric mode | — | 0 |
| EASUB | Electron affinity of substrate | — | 4.05 |
| EF | Flicker noise frequency exponent | — | 1 |
| EGIDL | Band bending parameter for GIDL | V | 0 |
| EGISL | Band bending parameter for GISL | V | 0.2 |
| EIGBINV | Parameter for Igb in inversion | V | 1.1 |
| EM | Flicker noise parameter | — | 4.1e+07 |
| EMOBT | Temperature coefficient of ETAMOB | — | 0 |
| EOT | Equivalent oxide thickness | m | 1e-09 |
| EOTACC | Equivalent oxide thickness for accumulation region | m | 0 |
| EOTBOX | Equivalent oxide thickness of the buried oxide (SOI FinFET) | m | 1.4e-07 |
| EPSROX | Relative dielectric constant of the gate dielectric | — | 3.9 |
| EPSRSP | Relative dielectric constant of the spacer | — | 3.9 |
| EPSRSUB | Relative dielectric constant of the channel material | — | 11.9 |
| ESATII | Saturation channel E-field for Iii | — | 1e+07 |
| ETA0 | DIBL coefficient | — | 0.6 |

Table 2.91: BSIM-CMG FINFET v110.0.0 Device Model Parameters

| Parameter | Description | Units | Default |
|---|---|---|---|
| ETA0LT | Coupled NFIN and length dependence of ETA0 | — | 0 |
| ETA0N1 | NFIN dependence of ETA0 | — | 0 |
| ETA0N2 | NFIN dependence of ETA0 | — | 100000 |
| ETA0R | Reverse-mode DIBL coefficient | — | 0 |
| ETAMOB | Effective field parameter | — | 2 |
| ETAQM | Bulk charge coefficient for Tcen | — | 0.54 |
| EU | Phonon/surface roughness scattering parameter | — | 2.5 |
| EUR | Reverse-mode phonon/surface roughness scattering parameter | — | 0 |
| FECH | End-channel factor for different orientation/shape | — | 1 |
| FECHCV | CV end-channel factor for different orientation/shape | — | 1 |
| FPITCH | Fin pitch | m | 8e-08 |
| GEOMOD | 0: Double gate; 1: Triple gate; 2: Quadruple gate; 3: Cylindrical gate; 4: Unified fin Shape | — | 0 |
| GIDLMOD | 0: Turn off GIDL/GISL current; 1: Turn on GIDL/GISL current | — | 0 |
| HEPI | Height of the raised source/drain on top of the fin | m | 1e-08 |
| HFIN | Fin height | m | 3e-08 |
| IDS0MULT | Variability in drain current for miscellaneous reasons | — | 1 |
| IGBMOD | 0: Turn off Igb; 1: Turn on Igb | — | 0 |
| IGCLAMP | 0: Disable gate current clamps; 1: Enable gate current clamps | — | 1 |
| IGCMOD | 0: Turn off Igc, Igs and Igd; 1: Turn on Igc, Igs and Igd | — | 0 |
| IGT | Gate current temperature dependence | — | 2.5 |
| IIMOD | 0: Turn off impact ionization current; 1: BSIM4-based model; 2: BSIMSOI-based model | — | 0 |
| IIMOD2CLAMP1 | Clamp1 of SII1*Vg term in IIMOD=2 model | V | 0.1 |
| IIMOD2CLAMP2 | Clamp2 of SII0*Vg term in IIMOD=2 model | V | 0.1 |
| IIMOD2CLAMP3 | Clamp3 of Ratio term in IIMOD=2 model | V | 0.1 |
| IIT | Impact ionization temperature dependence for IIMOD = 1 | — | -0.5 |
| IJTHDFWD | Forward drain diode breakdown limiting current | A | 0 |
| IJTHDREV | Reverse drain diode breakdown limiting current | A | 0 |
| IJTHSFWD | Forward source diode breakdown limiting current | A | 0.1 |

Table 2.91: BSIM-CMG FINFET v110.0.0 Device Model Parameters

| Parameter | Description | Units | Default |
|---|---|---|---|
| IJTHSREV | Reverse source diode breakdown limiting current | A | 0.1 |
| IMIN | Parameter for Vgs clamping for inversion region calculation in accumulation | — | 1e-15 |
| JSD | Bottom drain junction reverse saturation current density | — | 0 |
| JSS | Bottom source junction reverse saturation current density | — | 0.0001 |
| JSWD | Unit length reverse saturation current for sidewall drain junction | — | 0 |
| JSWGD | Unit length reverse saturation current for gate-edge sidewall drain junction | — | 0 |
| JSWGS | Unit length reverse saturation current for gate-edge sidewall source junction | — | 0 |
| JSWS | Unit length reverse saturation current for sidewall source junction | — | 0 |
| JTSD | Bottom drain junction trap-assisted saturation current density | — | 0 |
| JTSS | Bottom source junction trap-assisted saturation current density | — | 0 |
| JTSSWD | Unit length trap-assisted saturation current for sidewall drain junction | — | 0 |
| JTSSWGD | Unit length trap-assisted saturation current for gate-edge sidewall drain junction | — | 0 |
| JTSSWGS | Unit length trap-assisted saturation current for gate-edge sidewall source junction | — | 0 |
| JTSSWS | Unit length trap-assisted saturation current for sidewall source junction | — | 0 |
| JTWEFF | Trap-assisted tunneling current width dependence | m | 0 |
| K0 | Lateral NUD voltage parameter | V | 0 |
| K01 | Temperature dependence of lateral NUD voltage parameter | V/K | 0 |
| K0SI | Correction factor for strong inversion used in Mnud. After binning it should be within (0:inf) | — | 1 |
| K0SI1 | Temperature dependence of K0SI | — | 0 |
| K0SISAT | Correction factor for strong inversion used in Mnud | — | 0 |
| K0SISAT1 | Temperature dependence of K0SISAT | — | 0 |
| K1 | Body effect coefficient for subthreshold region | — | 1e-06 |
| K11 | Temperature dependence of K1 | — | 0 |

Table 2.91: BSIM-CMG FINFET v110.0.0 Device Model Parameters

| Parameter | Description | Units | Default |
|---|---|---|---|
| K1RSCE | K1 for reverse short channel effect calculation | — | 0 |
| K2 | Body effect coefficient for BULKMOD==2 | — | 0 |
| K21 | Temperature dependence of K2 | — | 0 |
| K2SAT | Correction factor for K2 in saturation (high Vds) | — | 0 |
| K2SAT1 | Temperature dependence of K2SAT | — | 0 |
| K2SI | Correction factor for strong inversion used in Mob | — | 0 |
| K2SI1 | Temperature dependence of K2SI | — | 0 |
| K2SISAT | Correction factor for strong inversion used in Mob | — | 0 |
| K2SISAT1 | Temperature dependence of K2SISAT | — | 0 |
| KSATIV | Parameter for long channel Vdsat | — | 1 |
| KSATIVR | KSATIV in asymmetric mode | — | 0 |
| KT1 | Vth temperature coefficient | V | 0 |
| KT1L | Vth temperature L coefficient | — | 0 |
| L | Designed gate length | m | 3e-08 |
| LA1 | | — | 0 |
| LA11 | | — | 0 |
| LA2 | | — | 0 |
| LA21 | | — | 0 |
| LAGIDL | | — | 0 |
| LAGISL | | — | 0 |
| LAIGBACC | | — | 0 |
| LAIGBACC1 | | — | 0 |
| LAIGBINV | | — | 0 |
| LAIGBINV1 | | — | 0 |
| LAIGC | | — | 0 |
| LAIGC1 | | — | 0 |
| LAIGD | | — | 0 |
| LAIGD1 | | — | 0 |
| LAIGEN | | — | 0 |
| LAIGS | | — | 0 |
| LAIGS1 | | — | 0 |
| LALPHA0 | | — | 0 |
| LALPHA1 | | m/V | 0 |
| LALPHAII0 | | — | 0 |

Table 2.91: BSIM-CMG FINFET v110.0.0 Device Model Parameters

| Parameter | Description | Units | Default |
|---|---|---|---|
| LALPHAII1 | | m/V | 0 |
| LAT | | — | 0 |
| LATCV | | — | 0 |
| LATR | | — | 0 |
| LBETA0 | | m/V | 0 |
| LBETAII0 | | m/V | 0 |
| LBETAII1 | | — | 0 |
| LBETAII2 | | — | 0 |
| LBGIDL | | V | 0 |
| LBGISL | | V | 0 |
| LBIGBACC | | — | 0 |
| LBIGBINV | | — | 0 |
| LBIGC | | — | 0 |
| LBIGD | | — | 0 |
| LBIGEN | | — | 0 |
| LBIGS | | — | 0 |
| LCDSC | | — | 0 |
| LCDSCD | | — | 0 |
| LCDSCDR | | — | 0 |
| LCFD | | F | 0 |
| LCFS | | F | 0 |
| LCGBL | | F | 0 |
| LCGDL | | F | 0 |
| LCGIDL | | — | 0 |
| LCGISL | | — | 0 |
| LCGSL | | F | 0 |
| LCIGBACC | | m/V | 0 |
| LCIGBINV | | m/V | 0 |
| LCIGC | | m/V | 0 |
| LCIGD | | m/V | 0 |
| LCIGS | | m/V | 0 |
| LCIT | | — | 0 |
| LCITR | | — | 0 |
| LCKAPPAB | | — | 0 |

Table 2.91: BSIM-CMG FINFET v110.0.0 Device Model Parameters

| Parameter | Description | Units | Default |
|---|---|---|---|
| LCKAPPAD | | — | 0 |
| LCKAPPAS | | — | 0 |
| LCOVD | | F | 0 |
| LCOVS | | F | 0 |
| LDELTAVSAT | | — | 0 |
| LDELTAVSATCV | | — | 0 |
| LDROUT | | — | 0 |
| LDSUB | | — | 0 |
| LDVT0 | | — | 0 |
| LDVT1 | | — | 0 |
| LDVT1SS | | — | 0 |
| LDVTB | | — | 0 |
| LDVTSHIFT | | — | 0 |
| LDVTSHIFTR | | — | 0 |
| LEGIDL | | — | 0 |
| LEGISL | | — | 0 |
| LEIGBINV | | — | 0 |
| LEMOBT | | — | 0 |
| LESATII | | V | 0 |
| LETA0 | | — | 0 |
| LETA0R | | — | 0 |
| LETAMOB | | — | 0 |
| LEU | | — | 0 |
| LEUR | | — | 0 |
| LIGT | | — | 0 |
| LII | Channel length dependence parameter of Iii | — | 5e-10 |
| LIIT | | — | 0 |
| LINT | Length reduction parameter (dopant diffusion effect) | m | 0 |
| LINTIGEN | Lint for thermal generation current | m | 0 |
| LINTNOI | L offset for flicker noise calculation | $m^2$ | 0 |
| LK0 | | — | 0 |
| LK01 | | — | 0 |
| LK0SI | | — | 0 |

Table 2.91: BSIM-CMG FINFET v110.0.0 Device Model Parameters

| Parameter | Description | Units | Default |
|---|---|---|---|
| LK0SI1 | | — | 0 |
| LK0SISAT | | — | 0 |
| LK0SISAT1 | | — | 0 |
| LK1 | | — | 0 |
| LK11 | | — | 0 |
| LK1RSCE | | — | 0 |
| LK2 | | — | 0 |
| LK21 | | — | 0 |
| LK2SAT | | — | 0 |
| LK2SAT1 | | — | 0 |
| LK2SI | | — | 0 |
| LK2SI1 | | — | 0 |
| LK2SISAT | | — | 0 |
| LK2SISAT1 | | — | 0 |
| LKSATIV | | — | 0 |
| LKSATIVR | | — | 0 |
| LKT1 | | — | 0 |
| LL | Length reduction parameter (dopant diffusion effect) | — | 0 |
| LLC | Length reduction parameter (dopant diffusion effect) | — | 0 |
| LLII | | — | 0 |
| LLN | Length reduction parameter (dopant diffusion effect) | — | 1 |
| LLPE0 | | $m^2$ | 0 |
| LLPEB | | — | 0 |
| LMEXP | | — | 0 |
| LMEXPR | | — | 0 |
| LNBODY | | — | 0 |
| LNGATE | | — | 0 |
| LNIGBACC | | — | 0 |
| LNIGBINV | | — | 0 |
| LNTGEN | | — | 0 |
| LNTOX | | — | 0 |
| LPA | Mobility L power coefficient | — | 1 |

Table 2.91: BSIM-CMG FINFET v110.0.0 Device Model Parameters

| Parameter | Description | Units | Default |
|---|---|---|---|
| LPAR | Reverse-mode mobility L power coefficient | — | 0 |
| LPCLM | | — | 0 |
| LPCLMCV | | — | 0 |
| LPCLMG | | — | 0 |
| LPCLMR | | — | 0 |
| LPDIBL1 | | — | 0 |
| LPDIBL1R | | — | 0 |
| LPDIBL2 | | — | 0 |
| LPDIBL2R | | — | 0 |
| LPE0 | Equivalent length of pocket region at zero bias | m | 5e-09 |
| LPGIDL | | — | 0 |
| LPGISL | | — | 0 |
| LPHIBE | | — | 0 |
| LPHIG | | — | 0 |
| LPHIN | | — | 0 |
| LPIGCD | | — | 0 |
| LPOXEDGE | | — | 0 |
| LPRT | | — | 0 |
| LPRWGD | | m/V | 0 |
| LPRWGS | | m/V | 0 |
| LPSAT | | — | 0 |
| LPSATCV | | — | 0 |
| LPTWG | | — | 0 |
| LPTWGR | | — | 0 |
| LPTWGT | | — | 0 |
| LPVAG | | — | 0 |
| LQMFACTOR | | — | 0 |
| LQMTCENCV | | — | 0 |
| LQMTCENCVA | | — | 0 |
| LRDSW | | — | 0 |
| LRDW | | — | 0 |
| LRSD | Length of the source/drain | m | 0 |
| LRSW | | — | 0 |
| LSII0 | | m/V | 0 |

Table 2.91: BSIM-CMG FINFET v110.0.0 Device Model Parameters

| Parameter | Description | Units | Default |
|---|---|---|---|
| LSII1 | | — | 0 |
| LSII2 | | — | 0 |
| LSIID | | — | 0 |
| LSP | Thickness of the gate sidewall spacer | m | 0 |
| LSTTHETASAT | | — | 0 |
| LTGIDL | | — | 0 |
| LTII | | — | 0 |
| LTSS | | — | 0 |
| LU0 | | — | 0 |
| LU0R | | — | 0 |
| LUA | | — | 0 |
| LUA1 | | — | 0 |
| LUA1R | | — | 0 |
| LUAR | | — | 0 |
| LUC | | — | 0 |
| LUC1 | | — | 0 |
| LUC1R | | — | 0 |
| LUCR | | — | 0 |
| LUCS | | — | 0 |
| LUCSTE | | — | 0 |
| LUD | | — | 0 |
| LUD1 | | — | 0 |
| LUD1R | | — | 0 |
| LUDR | | — | 0 |
| LUP | | — | 0 |
| LUPR | | — | 0 |
| LUTE | | — | 0 |
| LUTER | | — | 0 |
| LUTL | | — | 0 |
| LUTLR | | — | 0 |
| LVSAT | | — | 0 |
| LVSAT1 | | — | 0 |
| LVSAT1R | | — | 0 |
| LVSATCV | | — | 0 |

Table 2.91: BSIM-CMG FINFET v110.0.0 Device Model Parameters

| Parameter | Description | Units | Default |
|---|---|---|---|
| LVSATR | | — | 0 |
| LWR | | — | 0 |
| LXRCRG1 | | — | 0 |
| LXRCRG2 | | — | 0 |
| MEXP | Smoothing function factor for Vdsat | — | 4 |
| MEXPR | Reverse-mode smoothing function factor for Vdsat | — | 0 |
| MJD | Drain bottom junction capacitance grading coefficient | — | 0 |
| MJD2 | Drain bottom two-step second junction capacitance grading coefficient | — | 0 |
| MJS | Source bottom junction capacitance grading coefficient | — | 0.5 |
| MJS2 | Source bottom two-step second junction capacitance grading coefficient | — | 0.125 |
| MJSWD | Drain sidewall junction capacitance grading coefficient | — | 0 |
| MJSWD2 | Drain sidewall two-step second junction capacitance grading coefficient | — | 0 |
| MJSWGD | Drain-side gate sidewall junction capacitance grading coefficient | — | 0 |
| MJSWGD2 | Drain-side gate sidewall two-step second junction capacitance grading coefficient | — | 0 |
| MJSWGS | Source-side gate sidewall junction capacitance grading coefficient | — | 0 |
| MJSWGS2 | Source-side gate sidewall two-step second junction capacitance grading coefficient | — | 0 |
| MJSWS | Source sidewall junction capacitance grading coefficient | — | 0.33 |
| MJSWS2 | Source sidewall two-step second junction capacitance grading coefficient | — | 0.083 |
| NA1 | | — | 0 |
| NA11 | | — | 0 |
| NA2 | | — | 0 |
| NA21 | | — | 0 |
| NAGIDL | | — | 0 |
| NAGISL | | — | 0 |
| NAIGBACC | | — | 0 |

Table 2.91: BSIM-CMG FINFET v110.0.0 Device Model Parameters

| Parameter | Description | Units | Default |
|---|---|---|---|
| NAIGBACC1 | | — | 0 |
| NAIGBINV | | — | 0 |
| NAIGBINV1 | | — | 0 |
| NAIGC | | — | 0 |
| NAIGC1 | | — | 0 |
| NAIGD | | — | 0 |
| NAIGD1 | | — | 0 |
| NAIGEN | | — | 0 |
| NAIGS | | — | 0 |
| NAIGS1 | | — | 0 |
| NALPHA0 | | — | 0 |
| NALPHA1 | | m/V | 0 |
| NALPHAII0 | | — | 0 |
| NALPHAII1 | | m/V | 0 |
| NAT | | — | 0 |
| NATCV | | — | 0 |
| NATR | | — | 0 |
| NBETA0 | | m/V | 0 |
| NBETAII0 | | m/V | 0 |
| NBETAII1 | | — | 0 |
| NBETAII2 | | — | 0 |
| NBGIDL | | V | 0 |
| NBGISL | | V | 0 |
| NBIGBACC | | — | 0 |
| NBIGBINV | | — | 0 |
| NBIGC | | — | 0 |
| NBIGD | | — | 0 |
| NBIGEN | | — | 0 |
| NBIGS | | — | 0 |
| NBODY | Channel (body) doping | — | 1e+22 |
| NBODYN1 | NFIN dependence of channel (body) doping | — | 0 |
| NBODYN2 | NFIN dependence of channel (body) doping | — | 100000 |
| NC0SUB | Conduction band density of states | — | 2.86e+25 |
| NCDSC | | — | 0 |

Table 2.91: BSIM-CMG FINFET v110.0.0 Device Model Parameters

| Parameter | Description | Units | Default |
|---|---|---|---|
| NCDSCD | | — | 0 |
| NCDSCDR | | — | 0 |
| NCFD | | F | 0 |
| NCFS | | F | 0 |
| NCGBL | | F | 0 |
| NCGDL | | F | 0 |
| NCGIDL | | — | 0 |
| NCGISL | | — | 0 |
| NCGSL | | F | 0 |
| NCIGBACC | | m/V | 0 |
| NCIGBINV | | m/V | 0 |
| NCIGC | | m/V | 0 |
| NCIGD | | m/V | 0 |
| NCIGS | | m/V | 0 |
| NCIT | | — | 0 |
| NCITR | | — | 0 |
| NCKAPPAB | | — | 0 |
| NCKAPPAD | | — | 0 |
| NCKAPPAS | | — | 0 |
| NCOVD | | F | 0 |
| NCOVS | | F | 0 |
| NDELTAVSAT | | — | 0 |
| NDELTAVSATCV | | — | 0 |
| NDROUT | | — | 0 |
| NDSUB | | — | 0 |
| NDVT0 | | — | 0 |
| NDVT1 | | — | 0 |
| NDVT1SS | | — | 0 |
| NDVTB | | — | 0 |
| NDVTSHIFT | | — | 0 |
| NDVTSHIFTR | | — | 0 |
| NEGIDL | | — | 0 |
| NEGISL | | — | 0 |
| NEIGBINV | | — | 0 |

Table 2.91: BSIM-CMG FINFET v110.0.0 Device Model Parameters

| Parameter | Description | Units | Default |
|---|---|---|---|
| NEMOBT | | — | 0 |
| NESATII | | V | 0 |
| NETA0 | | — | 0 |
| NETAOR | | — | 0 |
| NETAMOB | | — | 0 |
| NEU | | — | 0 |
| NEUR | | — | 0 |
| NF | Number of fingers | — | 1 |
| NFIN | Number of fins per finger (real number enables optimization) | — | 1 |
| NGATE | Parameter for poly gate doping. For metal gate please set NGATE = 0 | — | 0 |
| NGCON | Number of gate contact (1 or 2 sided) | — | 1 |
| NIOSUB | Intrinsic carrier constant at 300.15K | — | 1.1e+16 |
| NIGBACC | Parameter for Igb in accumulation | — | 1 |
| NIGBINV | Parameter for Igb in inversion | — | 3 |
| NIGT | | — | 0 |
| NIIT | | — | 0 |
| NJD | Drain junction emission coefficient | — | 0 |
| NJS | Source junction emission coefficient | — | 1 |
| NJTS | Non-ideality factor for JTSS | — | 20 |
| NJTSD | Non-ideality factor for JTSD | — | 0 |
| NJTSSW | Non-ideality factor for JTSSWS | — | 20 |
| NJTSSWD | Non-ideality factor for JTSSWD | — | 0 |
| NJTSSWG | Non-ideality factor for JTSSWGS | — | 20 |
| NJTSSWGD | Non-ideality factor for JTSSWGD | — | 0 |
| NK0 | | — | 0 |
| NK01 | | — | 0 |
| NK0SI | | — | 0 |
| NK0SI1 | | — | 0 |
| NK0SISAT | | — | 0 |
| NK0SISAT1 | | — | 0 |
| NK1 | | — | 0 |
| NK11 | | — | 0 |
| NK1RSCE | | — | 0 |

Table 2.91: BSIM-CMG FINFET v110.0.0 Device Model Parameters

| Parameter | Description | Units | Default |
|---|---|---|---|
| NK2 | | — | 0 |
| NK21 | | — | 0 |
| NK2SAT | | — | 0 |
| NK2SAT1 | | — | 0 |
| NK2SI | | — | 0 |
| NK2SI1 | | — | 0 |
| NK2SISAT | | — | 0 |
| NK2SISAT1 | | — | 0 |
| NKSATIV | | — | 0 |
| NKSATIVR | | — | 0 |
| NKT1 | | — | 0 |
| NLII | | — | 0 |
| NLPE0 | | $m^2$ | 0 |
| NLPEB | | — | 0 |
| NMEXP | | — | 0 |
| NMEXPR | | — | 0 |
| NNBODY | | — | 0 |
| NNGATE | | — | 0 |
| NNIGBACC | | — | 0 |
| NNIGBINV | | — | 0 |
| NNTGEN | | — | 0 |
| NNTOX | | — | 0 |
| NOIA | Flicker noise parameter | — | 6.25e+39 |
| NOIB | Flicker noise parameter | — | 3.125e+24 |
| NOIC | Flicker noise parameter | — | 8.75e+07 |
| NPCLM | | — | 0 |
| NPCLMCV | | — | 0 |
| NPCLMG | | — | 0 |
| NPCLMR | | — | 0 |
| NPDIBL1 | | — | 0 |
| NPDIBL1R | | — | 0 |
| NPDIBL2 | | — | 0 |
| NPDIBL2R | | — | 0 |
| NPGIDL | | — | 0 |

Table 2.91: BSIM-CMG FINFET v110.0.0 Device Model Parameters

| Parameter | Description | Units | Default |
|---|---|---|---|
| NPGISL | | — | 0 |
| NPHIBE | | — | 0 |
| NPHIG | | — | 0 |
| NPHIN | | — | 0 |
| NPIGCD | | — | 0 |
| NPOXEDGE | | — | 0 |
| NPRT | | — | 0 |
| NPRWGD | | m/V | 0 |
| NPRWGS | | m/V | 0 |
| NPSAT | | — | 0 |
| NPSATCV | | — | 0 |
| NPTWG | | — | 0 |
| NPTWGR | | — | 0 |
| NPTWGT | | — | 0 |
| NPVAG | | — | 0 |
| NQMFACTOR | | — | 0 |
| NQMTCENCV | | — | 0 |
| NQMTCENCVA | | — | 0 |
| NQSMOD | 0: Turn off NQS model; 1: NQS gate resistance (with gi node); 2: NQS charge deficit model from BSIM4 (with q node) | — | 0 |
| NRD | Number of source diffusion squares | — | 0 |
| NRDSW | | — | 0 |
| NRDW | | — | 0 |
| NRS | Number of source diffusion squares | — | 0 |
| NRSW | | — | 0 |
| NSD | Source/drain active doping concentration | — | 2e+26 |
| NSDE | Source/drain active doping concentration at Leff edge | — | 2e+25 |
| NSEG | Number of segments for NQSMOD=3 (3, 5 and 10 supported) | — | 4 |
| NSII0 | | m/V | 0 |
| NSII1 | | — | 0 |
| NSII2 | | — | 0 |
| NSIID | | — | 0 |

Table 2.91: BSIM-CMG FINFET v110.0.0 Device Model Parameters

| Parameter | Description | Units | Default |
|---|---|---|---|
| NSTTHETASAT | | — | 0 |
| NTGEN | Thermal generation current parameter | — | 1 |
| NTGIDL | | — | 0 |
| NTII | | — | 0 |
| NTNOI | Thermal noise parameter | — | 1 |
| NTOX | Exponent for Tox ratio | — | 1 |
| NTSS | | — | 0 |
| NUO | | — | 0 |
| NUOR | | — | 0 |
| NUA | | — | 0 |
| NUA1 | | — | 0 |
| NUA1R | | — | 0 |
| NUAR | | — | 0 |
| NUC | | — | 0 |
| NUC1 | | — | 0 |
| NUC1R | | — | 0 |
| NUCR | | — | 0 |
| NUCS | | — | 0 |
| NUCSTE | | — | 0 |
| NUD | | — | 0 |
| NUD1 | | — | 0 |
| NUD1R | | — | 0 |
| NUDR | | — | 0 |
| NUP | | — | 0 |
| NUPR | | — | 0 |
| NUTE | | — | 0 |
| NUTER | | — | 0 |
| NUTL | | — | 0 |
| NUTLR | | — | 0 |
| NVSAT | | — | 0 |
| NVSAT1 | | — | 0 |
| NVSAT1R | | — | 0 |
| NVSATCV | | — | 0 |
| NVSATR | | — | 0 |

Table 2.91: BSIM-CMG FINFET v110.0.0 Device Model Parameters

| Parameter | Description | Units | Default |
|---|---|---|---|
| NVTM | Subthreshold swing factor multiplied by Vtm. If defined by user, it will overwrite nVtm in the code | V | 0 |
| NWR | | — | 0 |
| NXRCRG1 | | — | 0 |
| NXRCRG2 | | — | 0 |
| PA1 | | — | 0 |
| PA11 | | — | 0 |
| PA2 | | — | 0 |
| PA21 | | — | 0 |
| PAGIDL | | — | 0 |
| PAGISL | | — | 0 |
| PAIGBACC | | — | 0 |
| PAIGBACC1 | | — | 0 |
| PAIGBINV | | — | 0 |
| PAIGBINV1 | | — | 0 |
| PAIGC | | — | 0 |
| PAIGC1 | | — | 0 |
| PAIGD | | — | 0 |
| PAIGD1 | | — | 0 |
| PAIGEN | | — | 0 |
| PAIGS | | — | 0 |
| PAIGS1 | | — | 0 |
| PALPHA0 | | — | 0 |
| PALPHA1 | | — | 0 |
| PALPHAII0 | | — | 0 |
| PALPHAII1 | | — | 0 |
| PAT | | — | 0 |
| PATCV | | — | 0 |
| PATR | | — | 0 |
| PBD | Drain-side bulk junction built-in potential | V | 0 |
| PBETA0 | | — | 0 |
| PBETAII0 | | — | 0 |
| PBETAII1 | | — | 0 |
| PBETAII2 | | — | 0 |

Table 2.91: BSIM-CMG FINFET v110.0.0 Device Model Parameters

| Parameter | Description | Units | Default |
|---|---|---|---|
| PBGIDL | | — | 0 |
| PBGISL | | — | 0 |
| PBIGBACC | | — | 0 |
| PBIGBINV | | — | 0 |
| PBIGC | | — | 0 |
| PBIGD | | — | 0 |
| PBIGEN | | — | 0 |
| PBIGS | | — | 0 |
| PBS | Source-side bulk junction built-in potential | V | 1 |
| PBSWD | Built-in potential for Drain-side sidewall junction capacitance | V | 0 |
| PBSWGD | Built-in potential for Drain-side gate sidewall junction capacitance | V | 0 |
| PBSWGS | Built-in potential for Source-side gate sidewall junction capacitance | V | 0 |
| PBSWS | Built-in potential for Source-side sidewall junction capacitance | V | 1 |
| PCDSC | | F | 0 |
| PCDSCD | | F | 0 |
| PCDSCDR | | F | 0 |
| PCFD | | — | 0 |
| PCFS | | — | 0 |
| PCGBL | | — | 0 |
| PCGDL | | — | 0 |
| PCGIDL | | — | 0 |
| PCGISL | | — | 0 |
| PCGSL | | — | 0 |
| PCIGBACC | | — | 0 |
| PCIGBINV | | — | 0 |
| PCIGC | | — | 0 |
| PCIGD | | — | 0 |
| PCIGS | | — | 0 |
| PCIT | | F | 0 |
| PCITR | | — | 0 |
| PCKAPPAB | | — | 0 |

Table 2.91: BSIM-CMG FINFET v110.0.0 Device Model Parameters

| Parameter | Description | Units | Default |
|---|---|---|---|
| PCKAPPAD | | — | 0 |
| PCKAPPAS | | — | 0 |
| PCLM | Channel length modulation (CLM) parameter | — | 0.013 |
| PCLMCV | CLM parameter for short-channel CV | — | 0 |
| PCLMG | Gate bias dependence parameter for CLM | — | 0 |
| PCLMR | Reverse model PCLM parameter | — | 0 |
| PCOVD | | — | 0 |
| PCOVS | | — | 0 |
| PDEJ | Drain-to-substrate PN junction perimeter (BULKMOD=1 or 2) | m | 0 |
| PDELTAVSAT | | — | 0 |
| PDELTAVSATCV | | — | 0 |
| PDEO | Perimeter of drain-to-substrate overlap region through oxide | m | 0 |
| PDIBL1 | DIBL output conductance parameter - forward mode | — | 1.3 |
| PDIBL1R | DIBL output conductance parameter - reverse mode | — | 0 |
| PDIBL2 | DIBL output conductance parameter | — | 0.0002 |
| PDIBL2R | DIBL output conductance parameter - reverse mode | — | 0 |
| PDROUT | | — | 0 |
| PDSUB | | — | 0 |
| PDVT0 | | — | 0 |
| PDVT1 | | — | 0 |
| PDVT1SS | | — | 0 |
| PDVTB | | — | 0 |
| PDVTSHIFT | | — | 0 |
| PDVTSHIFTR | | — | 0 |
| PEGIDL | | — | 0 |
| PEGISL | | — | 0 |
| PEIGBINV | | — | 0 |
| PEMOBT | | — | 0 |
| PESATII | | — | 0 |
| PETA0 | | — | 0 |
| PETA0R | | — | 0 |

Table 2.91: BSIM-CMG FINFET v110.0.0 Device Model Parameters

| Parameter | Description | Units | Default |
|---|---|---|---|
| PETAMOB | | — | 0 |
| PEU | | — | 0 |
| PEUR | | — | 0 |
| PGIDL | Parameter for body-bias effect on GIDL | — | 0 |
| PGISL | Parameter for body-bias effect on GISL | — | 1 |
| PHIBE | Body effect voltage parameter. After binning it should be within [0.2:1.2] | V | 0.7 |
| PHIG | Gate workfunction | — | 4.61 |
| PHIGL | Length dependence of gate workfunction | — | 0 |
| PHIGLT | Coupled NFIN and length dependence of gate workfunction | — | 0 |
| PHIGN1 | NFIN dependence of gate workfunction | — | 0 |
| PHIGN2 | NFIN dependence of gate workfunction | — | 100000 |
| PHIN | Nonuniform vertical doping effect on surface potential | V | 0.05 |
| PIGCD | Parameter for Igc partition | — | 1 |
| PIGT | | — | 0 |
| PIIT | | — | 0 |
| PK0 | | — | 0 |
| PK01 | | — | 0 |
| PK0SI | | — | 0 |
| PK0SI1 | | — | 0 |
| PK0SISAT | | — | 0 |
| PK0SISAT1 | | — | 0 |
| PK1 | | — | 0 |
| PK11 | | — | 0 |
| PK1RSCE | | — | 0 |
| PK2 | | — | 0 |
| PK21 | | — | 0 |
| PK2SAT | | — | 0 |
| PK2SAT1 | | — | 0 |
| PK2SI | | — | 0 |
| PK2SI1 | | — | 0 |
| PK2SISAT | | — | 0 |
| PK2SISAT1 | | — | 0 |

Table 2.91: BSIM-CMG FINFET v110.0.0 Device Model Parameters

| Parameter | Description | Units | Default |
|---|---|---|---|
| PKSATIV | | — | 0 |
| PKSATIVR | | — | 0 |
| PKT1 | | — | 0 |
| PLII | | — | 0 |
| PLPE0 | | — | 0 |
| PLPEB | | — | 0 |
| PMEXP | | — | 0 |
| PMEXPR | | — | 0 |
| PNBODY | | — | 0 |
| PNGATE | | — | 0 |
| PNIGBACC | | — | 0 |
| PNIGBINV | | — | 0 |
| PNTGEN | | — | 0 |
| PNTOX | | — | 0 |
| POXEDGE | Factor for the gate edge Tox | — | 1 |
| PPCLM | | — | 0 |
| PPCLMCV | | — | 0 |
| PPCLMG | | — | 0 |
| PPCLMR | | — | 0 |
| PPDIBL1 | | — | 0 |
| PPDIBL1R | | — | 0 |
| PPDIBL2 | | — | 0 |
| PPDIBL2R | | — | 0 |
| PPGIDL | | — | 0 |
| PPGISL | | — | 0 |
| PPHIBE | | — | 0 |
| PPHIG | | — | 0 |
| PPHIN | | — | 0 |
| PPIGCD | | — | 0 |
| PPOXEDGE | | — | 0 |
| PPRT | | — | 0 |
| PPRWGD | | — | 0 |
| PPRWGS | | — | 0 |
| PPSAT | | — | 0 |

Table 2.91: BSIM-CMG FINFET v110.0.0 Device Model Parameters

| Parameter | Description | Units | Default |
|---|---|---|---|
| PPSATCV | | — | 0 |
| PPTWG | | — | 0 |
| PPTWGR | | — | 0 |
| PPTWGT | | — | 0 |
| PPVAG | | — | 0 |
| PQM | Slope of normalized Tcen in inversion | — | 0.66 |
| PQMACC | Slope of normalized Tcen in accumulation | — | 0.66 |
| PQMFACTOR | | — | 0 |
| PQMTCENCV | | — | 0 |
| PQMTCENCVA | | — | 0 |
| PRDDR | Drain-side quasi-saturation parameter | — | 0 |
| PRDSW | | — | 0 |
| PRDW | | — | 0 |
| PRSDEND | Extra silicon/silicide interface perimeter at the two ends of the FinFET | m | 0 |
| PRSDR | Source-side quasi-saturation parameter | — | 1 |
| PRSW | | — | 0 |
| PRT | Series resistance temperature coefficient | — | 0.001 |
| PRWGD | Gate bias dependence of drain extension resistance | $V^{-1}$ | 0 |
| PRWGS | Gate bias dependence of source extension resistance | $V^{-1}$ | 0 |
| PSAT | Velocity saturation exponent, after binnig should be from [2.0:inf) | — | 2 |
| PSATCV | Velocity saturation exponent for C-V | — | 0 |
| PSEJ | Source-to-substrate PN junction perimeter (BULKMOD=1 or 2) | m | 0 |
| PSEO | Perimeter of source-to-substrate overlap region through oxide | m | 0 |
| PSII0 | | — | 0 |
| PSII1 | | — | 0 |
| PSII2 | | — | 0 |
| PSIID | | — | 0 |
| PSTTHETASAT | | — | 0 |
| PTGIDL | | — | 0 |
| PTII | | — | 0 |

Table 2.91: BSIM-CMG FINFET v110.0.0 Device Model Parameters

| Parameter | Description | Units | Default |
|---|---|---|---|
| PTSS | | — | 0 |
| PTWG | Gmsat degradation parameter - forward mode | — | 0 |
| PTWGR | Gmsat degradation parameter - reverse mode | — | 0 |
| PTWGT | PTWG temperature coefficient | — | 0.004 |
| PU0 | | — | 0 |
| PU0R | | — | 0 |
| PUA | | — | 0 |
| PUA1 | | — | 0 |
| PUA1R | | — | 0 |
| PUAR | | — | 0 |
| PUC | | — | 0 |
| PUC1 | | — | 0 |
| PUC1R | | — | 0 |
| PUCR | | — | 0 |
| PUCS | | — | 0 |
| PUCSTE | | — | 0 |
| PUD | | — | 0 |
| PUD1 | | — | 0 |
| PUD1R | | — | 0 |
| PUDR | | — | 0 |
| PUP | | — | 0 |
| PUPR | | — | 0 |
| PUTE | | — | 0 |
| PUTER | | — | 0 |
| PUTL | | — | 0 |
| PUTLR | | — | 0 |
| PVAG | Vgs dependence on early voltage | — | 1 |
| PVSAT | | — | 0 |
| PVSAT1 | | — | 0 |
| PVSAT1R | | — | 0 |
| PVSATCV | | — | 0 |
| PVSATR | | — | 0 |
| PWR | | — | 0 |
| PXRCRG1 | | — | 0 |

Table 2.91: BSIM-CMG FINFET v110.0.0 Device Model Parameters

| Parameter | Description | Units | Default |
|---|---|---|---|
| PXRCRG2 | | — | 0 |
| QM0 | Knee-point for Tcen in inversion (Charge normalized to Cox) | V | 0.001 |
| QM0ACC | Knee-point for Tcen in accumulation (Charge normalized to Cox) | V | 0.001 |
| QMFACTOR | Prefactor + switch for QM Vth correction | — | 0 |
| QMFACTORCV | Charge dependence taking QM effects into account | — | 0 |
| QMTCENCV | Prefactor + switch for QM Width and Toxeff correction for CV | — | 0 |
| QMTCENCVA | Prefactor + switch for QM Width and Toxeff correction for CV (accumulation region) | — | 0 |
| RDDR | Drain-side drift resistance parameter - forward mode | — | 0 |
| RDDRR | Drain-side drift resistance parameter - reverse mode | — | 0 |
| RDSMOD | 0: Internal S/D resistance model; 1: External S/D resistance model; 2: Both bias dependent and independent part of S/D resistance internal | — | 0 |
| RDSW | RDSMOD = 0 zero bias S/D extension resistance per unit width | — | 100 |
| RDSWMIN | RDSMOD = 0 S/D extension resistance per unit width at high Vgs | — | 0 |
| RDW | RDSMOD = 1 zero bias drain extension resistance per unit width | — | 50 |
| RDWMIN | RDSMOD = 1 drain extension resistance per unit width at high Vgs | — | 0 |
| RGATEMOD | 0: Turn off gate electrode resistance (without ge node); 1: Turn on gate electrode resistance (with ge node) | — | 0 |
| RGEOA | Fitting parameter for RGEOMOD=1 | — | 1 |
| RGEOB | Fitting parameter for RGEOMOD=1 | — | 0 |
| RGEOC | Fitting parameter for RGEOMOD=1 | — | 0 |
| RGEOD | Fitting parameter for RGEOMOD=1 | — | 0 |
| RGEOE | Fitting parameter for RGEOMOD=1 | — | 0 |
| RGEOMOD | Geometry-dependent source/drain resistance; 0: RSH-based; 1: Holistic | — | 0 |
| RGEXT | Effective gate electrode external resistance | — | 0 |
| RGFIN | Effective gate electrode per finger per fin resistance | — | 0.001 |

Table 2.91: BSIM-CMG FINFET v110.0.0 Device Model Parameters

| Parameter | Description | Units | Default |
|---|---|---|---|
| RHOC | Contact resistivity at the silicon/silicide interface | — | 1e-12 |
| RHORSD | Average resistivity of silicon in the raised source/drain region | — | 1 |
| RNOIA | Thermal noise coefficient | — | 0.577 |
| RNOIB | Thermal noise coefficient | — | 0.37 |
| RNOIC | Thermal noise coefficient for TNOIMOD=1 | — | 0.395 |
| RSDR | Source-side drift resistance parameter - forward mode | — | 0 |
| RSDRR | Source-side drift resistance parameter - reverse mode | — | 0 |
| RSHD | Drain-side sheet resistance | — | 0 |
| RSHS | Source-side sheet resistance | — | 0 |
| RSW | RDSMOD = 1 zero bias source extension resistance per unit width | — | 50 |
| RSWMIN | RDSMOD = 1 source extension resistance per unit width at high Vgs | — | 0 |
| RTH0 | Thermal resistance | — | 0.01 |
| SCALEN | Noise scaling parameter for TNOIMOD=1 | — | 100000 |
| SDTERM | Indicator of whether the source/drain are terminated with silicide | — | 0 |
| SH_WARN | 0: Disable self-heating warnings; 1: Enable self-heating warnings | — | 0 |
| SHMOD | 0: Turn off self-heating; 1: Turn on self-heating | — | 0 |
| SII0 | Vgs dependence parameter of Iii | $V^{-1}$ | 0.5 |
| SII1 | 1st Vgs dependence parameter of Iii | — | 0.1 |
| SII2 | 2nd Vgs dependence parameter of Iii | V | 0 |
| SIID | 3rd Vds dependence parameter of Iii | V | 0 |
| SJD | Constant for drain-side two-step second junction | — | 0 |
| SJS | Constant for source-side two-step second junction | — | 0 |
| SJSWD | Constant for drain-side sidewall two-step second junction | — | 0 |
| SJSWGD | Constant for source-side gate sidewall two-step second junction | — | 0 |
| SJSWGS | Constant for source-side gate sidewall two-step second junction | — | 0 |
| SJSWS | Constant for source-side sidewall two-step second junction | — | 0 |

Table 2.91: BSIM-CMG FINFET v110.0.0 Device Model Parameters

| Parameter | Description | Units | Default |
|---|---|---|---|
| TBGASUB | Bandgap temperature coefficient | — | 0.000702 |
| TBGBSUB | Bandgap temperature coefficient | K | 1108 |
| TCJ | Temperature coefficient for CJS/CJD | — | 0 |
| TCJSW | Temperature coefficient for CJSWS/CJSWD | — | 0 |
| TCJSWG | Temperature coefficient for CJSWGS/CJSWGD | — | 0 |
| TEMPMOD | 1: Change temperature dependence of specific parameters | — | 0 |
| TETA0 | Temperature dependence of DIBL coefficient | — | 0 |
| TETA0R | Temperature dependence of reverse-mode DIBL coefficient | — | 0 |
| TFIN | Body (fin) thickness | m | 1.5e-08 |
| TFIN_BASE | Base body (fin) thickness for trapezoidal triple gate | m | 1.5e-08 |
| TFIN_TOP | Top body (fin) thickness for trapezoidal triple gate | m | 1.5e-08 |
| TGATE | Gate height on top of the hard mask | m | 3e-08 |
| TGIDL | GIDL/GISL temperature dependence | — | -0.003 |
| THETADIBL | DIBL length dependence. If defined by user, will overwrite Theta_DIBL in the code | — | 0 |
| THETASCE | Vth roll-off length dependence. If defined by user, it will overwrite Theta_SCE in the code | — | 0 |
| THETASW | Subthreshold swing length dependence. If defined by user, it will overwrite Theta_SW in the code | — | 0 |
| TII | Impact ionization temperature dependence for IIMOD = 2 | — | 0 |
| TMASK | Height of hard mask on top of the fin | m | 3e-08 |
| TMEXP | Temperature coefficient for Vdseff smoothing | — | 0 |
| TMEXPR | Reverse-mode temperature coefficient for Vdseff smoothing | — | 0 |
| TNJTS | Temperature coefficient for NJTS | — | 0 |
| TNJTSD | Temperature coefficient for NJTSD | — | 0 |
| TNJTSSW | Temperature coefficient for NJTSSW | — | 0 |
| TNJTSSWD | Temperature coefficient for NJTSSWD | — | 0 |
| TNJTSSWG | Temperature coefficient for NJTSSWG | — | 0 |
| TNJTSSWGD | Temperature coefficient for NJTSSWGD | — | 0 |
| TNOIA | Thermal noise parameter | — | 1.5 |
| TNOIB | Thermal noise parameter | — | 3.5 |

Table 2.91: BSIM-CMG FINFET v110.0.0 Device Model Parameters

| Parameter | Description | Units | Default |
|---|---|---|---|
| TNOIC | Thermal noise parameter for TNOIMOD=1 | — | 3.5 |
| TNOIMOD | 0: Charge-based, 1: Correlated thermal noise model | — | 0 |
| TNOM | Temperature at which the model is extracted | — | 27 |
| TOXG | Oxide thickness for gate current model | m | 0 |
| TOXP | Physical oxide thickness | m | 1.2e-09 |
| TOXREF | Target tox value | m | 1.2e-09 |
| TPB | Temperature coefficient for PBS/PBD | — | 0 |
| TPBSW | Temperature coefficient for PBSWS/PBSWD | — | 0 |
| TPBSWG | Temperature coefficient for PBSWGS/PBSWGD | — | 0 |
| TRDDR | Drain-side drift resistance temperature coefficient | — | 0 |
| TRSDR | Source-side drift resistance temperature coefficient | — | 0 |
| TSILI | Thickness of the silicide on top of the raised source/drain | m | 1e-08 |
| TSS | Swing temperature coefficient | — | 0 |
| TYPE | 0: PMOS; 1: NMOS | — | 0 |
| U0 | Low-field mobility | — | 0.03 |
| U0LT | Coupled NFIN and length dependence of U0 | — | 0 |
| U0MULT | Variability in carrier mobility | — | 1 |
| U0N1 | NFIN dependence of U0 | — | 0 |
| U0N1R | Reverse-mode NFIN dependence of U0 | — | 0 |
| U0N2 | NFIN dependence of U0 | — | 100000 |
| U0N2R | Reverse-mode NFIN dependence of U0 | — | 0 |
| U0R | Reverse-mode low-field mobility | — | 0 |
| UA | Phonon/surface roughness scattering parameter | — | 0.3 |
| UA1 | Mobility temperature coefficient for UA | — | 0.001032 |
| UA1R | Reverse-mode mobility temperature coefficient for UA | — | 0 |
| UAR | Reverse-mode phonon/surface roughness scattering parameter | — | 0 |
| UC | Body effect for mobility degradation parameter - BULKMOD=1 or 2 | — | 0 |
| UC1 | Mobility temperature coefficient for UC | — | 5.6e-11 |
| UC1R | Reverse-mode mobility temperature coefficient for UC | — | 0 |

Table 2.91: BSIM-CMG FINFET v110.0.0 Device Model Parameters

| Parameter | Description | Units | Default |
|---|---|---|---|
| UCR | Reverse-mode body effect for mobility degradation parameter - BULKMOD=1 or 2 | — | 0 |
| UCS | Columbic scattering parameter | — | 1 |
| UCSTE | Mobility temperature coefficient | — | -0.004775 |
| UD | Columbic scattering parameter | — | 0 |
| UD1 | Mobility temperature coefficient for UC | — | 0 |
| UD1R | Reverse-mode mobility temperature coefficient for UD | — | 0 |
| UDR | Reverse-mode columbic scattering parameter | — | 0 |
| UP | Mobility L coefficient | — | 0 |
| UPR | Reverse-mode mobility L coefficient | — | 0 |
| UTE | Mobility temperature coefficient | — | 0 |
| UTER | Reverse-mode for mobility temperature coefficient | — | 0 |
| UTL | Mobility temperature coefficient | — | -0.0015 |
| UTLR | Reverse-mode for mobility temperature coefficient | — | 0 |
| VFBSD | Flatband voltage for S/D region | V | 0 |
| VFBSDCV | Flatband voltage for S/D region for C-V calculations | V | 0 |
| VSAT | Saturation velocity for the saturation region | — | 85000 |
| VSAT1 | Velocity saturation parameter for Ion degradation - forward mode | — | 0 |
| VSAT1N1 | NFIN dependence of VSAT1 | — | 0 |
| VSAT1N2 | NFIN dependence of VSAT1 | — | 0 |
| VSAT1R | Velocity saturation parameter for Ion degradation - reverse mode | — | 0 |
| VSAT1RN1 | NFIN dependence of VSAT1R | — | 0 |
| VSAT1RN2 | NFIN dependence of VSAT1R | — | 0 |
| VSATCV | Velocity saturation parameter for CV | — | 0 |
| VSATN1 | NFIN dependence of VSAT | — | 0 |
| VSATN2 | NFIN dependence of VSAT | — | 100000 |
| VSATR | Saturation velocity for the saturation region in the reverse mode | — | 0 |
| VSATRN1 | NFIN dependence of VSATR | — | 0 |
| VSATRN2 | NFIN dependence of VSATR | — | 0 |

Table 2.91: BSIM-CMG FINFET v110.0.0 Device Model Parameters

| Parameter | Description | Units | Default |
|---|---|---|---|
| VTSD | Bottom drain junction trap-assisted current voltage dependent parameter | V | 0 |
| VTSS | Bottom source junction trap-assisted current voltage dependent parameter | V | 10 |
| VTSSWD | Unit length trap-assisted current voltage dependent parameter for sidewall drain junction | V | 0 |
| VTSSWGD | Unit length trap-assisted current voltage dependent parameter for gate-edge sidewall drain junction | V | 0 |
| VTSSWGS | Unit length trap-assisted current voltage dependent parameter for gate-edge sidewall source junction | V | 10 |
| VTSSWS | Unit length trap-assisted current voltage dependent parameter for sidewall source junction | V | 10 |
| W_UFCM | Effective channel width for the unified Model | m | 1 |
| WR | W dependence parameter of S/D extension resistance | — | 1 |
| WTH0 | Width dependence coefficient for Rth and Cth | m | 0 |
| XJBVD | Fitting parameter for drain diode breakdown current | — | 0 |
| XJBVS | Fitting parameter for source diode breakdown current | — | 1 |
| XL | L offset for channel length due to mask/etch effect | m | 0 |
| XRCRG1 | Parameter for non-quasistatic gate resistance (NQSMOD = 1) and NQSMOD = 2 | — | 12 |
| XRCRG2 | Parameter for non-quasistatic gate resistance (NQSMOD = 1) and NQSMOD = 2 | — | 1 |
| XTID | Drain junction current temperature exponent | — | 0 |
| XTIS | Source junction current temperature exponent | — | 3 |
| XTSD | Power dependence of JTSD on temperature | — | 0 |
| XTSS | Power dependence of JTSS on temperature | — | 0.02 |
| XTSSWD | Power dependence of JTSSWD on temperature | — | 0 |
| XTSSWGD | Power dependence of JTSSWGD on temperature | — | 0 |
| XTSSWGS | Power dependence of JTSSWGS on temperature | — | 0.02 |
| XTSSWS | Power dependence of JTSSWS on temperature | — | 0.02 |

## Level 107 MOSFET Tables (BSIM CMG version 107.0.0)

**Xyce** includes the BSIM CMG Common Multi-gate model version 107. This model has been superceded by the level 110 version, but has been retained for backward compatibility with previous versions of Xyce and older model cards. The code in **Xyce** was generated from the BSIM group's Verilog-A input using the default "ifdef" lines provided, and therefore supports only the subset of BSIM CMG features those defaults enable. Instance and model parameters for the BSIM CMG model are given in tables 2.92 and 2.93. Details of the model are documented in the BSIM-CMG technical report[26], available from the BSIM web site at `http://bsim.berkeley.edu/models/bsimcmg/`.

Table 2.92: BSIM-CMG FINFET v107.0.0 Device Instance Parameters

| Parameter | Description | Units | Default |
|---|---|---|---|
| ADEJ | Drain junction area (BULKMOD=1) | – | 0 |
| ADEO | Drain to substrate overlap area through oxide | – | 0 |
| ASEJ | Source junction area (BULKMOD=1) | – | 0 |
| ASEO | Source to substrate overlap area through oxide | – | 0 |
| CDSP | Constant drain-to-source fringe capacitance (All CGEOMOD) | – | 0 |
| CGDP | Constant gate-to-drain fringe capacitance (CGEOMOD=1) | – | 0 |
| CGSP | Constant gate-to-source fringe capacitance (CGEOMOD=1) | – | 0 |
| COVD | Constant g/d overlap capacitance (CGEOMOD=1) | – | 0 |
| COVS | Constant g/s overlap capacitance (CGEOMOD=1) | – | 0 |
| D | Diameter of the cylinder (GEOMOD=3) | – | 4e-08 |
| FPITCH | Fin pitch | – | 8e-08 |
| L | Designed Gate Length | – | 3e-08 |
| LRSD | Length of the source/drain | – | 0 |
| NFIN | Number of fins per finger (real number enables optimization) | – | 1 |
| NGCON | number of gate contact (1 or 2 sided) | – | 1 |
| NRD | Number of source diffusion squares | – | 0 |
| NRS | Number of source diffusion squares | – | 0 |
| PDEJ | Drain to substrate PN junction perimeter (BULKMOD=1) | – | 0 |
| PDEO | Perimeter of drain to substrate overlap region through oxide | – | 0 |
| PSEJ | Source to substrate PN junction perimeter (BULKMOD=1) | – | 0 |

Table 2.92: BSIM-CMG FINFET v107.0.0 Device Instance Parameters

| Parameter | Description | Units | Default |
|---|---|---|---|
| PSEO | Perimeter of source to substrate overlap region through oxide | – | 0 |
| TFIN | Body (Fin) thickness | – | 1.5e-08 |

Table 2.93: BSIM-CMG FINFET v107.0.0 Device Model Parameters

| Parameter | Description | Units | Default |
|---|---|---|---|
| A1 | Non-saturation effect parameter for strong inversion region | – | 0 |
| A11 | Temperature dependence of A1 | – | 0 |
| A2 | Non-saturation effect parameter for moderate inversion region | – | 0 |
| A21 | Temperature dependence of A2 | – | 0 |
| ADEJ | Drain junction area (BULKMOD=1) | – | 0 |
| ADEO | Drain to substrate overlap area through oxide | – | 0 |
| AEU | | – | 0 |
| AGIDL | pre-exponential coeff. for GIDL in mho | – | 0 |
| AGISL | pre-exponential coeff. for GISL in mho | – | 6.055e-12 |
| AIGBACC | parameter for Igb in accumulation | – | 0.0136 |
| AIGBACC1 | parameter for Igb in accumulation | – | 0 |
| AIGBINV | parameter for Igb in inversion | – | 0.0111 |
| AIGBINV1 | parameter for Igb in inversion | – | 0 |
| AIGC | parameter for Igc in inversion | – | 0.0136 |
| AIGC1 | parameter for Igc in inversion | – | 0 |
| AIGD | parameter for Igd in inversion | – | 0 |
| AIGD1 | parameter for Igd in inversion | – | 0 |
| AIGEN | Thermal Generation Current Parameter | – | 0 |
| AIGS | parameter for Igs in inversion | – | 0.0136 |
| AIGS1 | parameter for Igs in inversion | – | 0 |
| ALPHA0 | first parameter of Iii | m/V | 0 |
| ALPHA01 | Temperature dependence of ALPHA0, m/V/degrees | – | 0 |
| ALPHA1 | L scaling parameter of Iii | $V^{-1}$ | 0 |
| ALPHA11 | Temperature dependence ALPHA1, 1/V/degree | – | 0 |
| ALPHAII0 | first parameter of Iii for IIMOD=2, m/V | – | 0 |

Table 2.93: BSIM-CMG FINFET v107.0.0 Device Model Parameters

| Parameter | Description | Units | Default |
|---|---|---|---|
| ALPHAII01 | Temperature dependence of ALPHAII0, m/V/degrees | – | 0 |
| ALPHAII1 | L scaling parameter of Iii for IIMOD=2 | $V^{-1}$ | 0 |
| ALPHAII11 | Temperature dependence of ALPHAII1, 1/V/degrees | – | 0 |
| AMEXP | | – | 0 |
| AMEXPR | | – | 0 |
| APCLM | | – | 0 |
| APSAT | | – | 0 |
| APSATCV | | – | 0 |
| APTWG | | – | 0 |
| AQMTCEN | Parameter for Geometric dependence of Tcen on R/TFIN/HFIN | – | 0 |
| ARDSW | | – | 0 |
| ARDW | | – | 0 |
| ARSDEND | | – | 0 |
| ARSW | | – | 0 |
| ASEJ | Source junction area (BULKMOD=1) | – | 0 |
| ASEO | Source to substrate overlap area through oxide | – | 0 |
| ASILIEND | | – | 0 |
| ASYMMOD | Asymmetric model selector | – | 0 |
| AT | | – | -0.00156 |
| AUA | | – | 0 |
| AUD | | – | 0 |
| AVSAT | | – | 0 |
| AVSAT1 | | – | 0 |
| AVSATCV | | – | 0 |
| BETA0 | Vds dependent parameter of Iii | $V^{-1}$ | 0 |
| BETAII0 | Vds dependent parameter of Iii | $V^{-1}$ | 0 |
| BETAII1 | Vds dependent parameter of Iii | – | 0 |
| BETAII2 | Vds dependent parameter of Iii, V | – | 0.1 |
| BEU | | – | 1e-07 |
| BG0SUB | Band gap of substrate at 300.15K, eV | – | 1.12 |
| BGIDL | exponential coeff. for GIDL | V/m | 0 |
| BGISL | exponential coeff. for GISL | V/m | 3e+08 |

Table 2.93: BSIM-CMG FINFET v107.0.0 Device Model Parameters

| Parameter | Description | Units | Default |
|---|---|---|---|
| BIGBACC | parameter for Igb in accumulation | – | 0.00171 |
| BIGBINV | parameter for Igb in inversion | – | 0.000949 |
| BIGC | parameter for Igc in inversion | – | 0.00171 |
| BIGD | parameter for Igd in inversion | – | 0 |
| BIGEN | Thermal Generation Current Parameter | – | 0 |
| BIGS | parameter for Igs in inversion | – | 0.00171 |
| BMEXP | | – | 1 |
| BMEXPR | | – | 0 |
| BPCLM | | – | 1e-07 |
| BPSAT | | – | 1 |
| BPSATCV | | – | 0 |
| BPTWG | | – | 1e-07 |
| BQMTCEN | Parameter for Geometric dependence of Tcen on R/TFIN/HFIN | – | 1.2e-08 |
| BRDSW | | – | 1e-07 |
| BRDW | | – | 1e-07 |
| BRSW | | – | 1e-07 |
| BUA | | – | 1e-07 |
| BUD | | – | 5e-08 |
| BULKMOD | Bulk model | – | 0 |
| BVD | Drain diode breakdown voltage | – | 0 |
| BVS | Source diode breakdown voltage | – | 10 |
| BVSAT | | – | 1e-07 |
| BVSAT1 | | – | 0 |
| BVSATCV | | – | 0 |
| CAPMOD | Accumulation region capacitance model selector | – | 0 |
| CDSC | coupling capacitance between S/D and channel | – | 0.007 |
| CDSCD | drain-bias sensitivity of CDSC | – | 0.007 |
| CDSCDN1 | NFIN dependence of CDSCD | – | 0 |
| CDSCDN2 | NFIN dependence of CDSCD | – | 100000 |
| CDSCDR | Reverse-mode drain-bais sensitivity of CDSC (Experimental) | – | 0 |
| CDSCDRN1 | NFIN dependence of CDSCD | – | 0 |
| CDSCDRN2 | NFIN dependence of CDSCD | – | 0 |
| CDSCN1 | NFIN dependence of CDSC | – | 0 |

Table 2.93: BSIM-CMG FINFET v107.0.0 Device Model Parameters

| Parameter | Description | Units | Default |
|---|---|---|---|
| CDSCN2 | NFIN dependence of CDSC | – | 100000 |
| CDSP | Constant drain-to-source fringe capacitance (All CGEOMOD) | – | 0 |
| CFD | Outer Fringe Cap (drain side) | – | 0 |
| CFS | Outer Fringe Cap (source side) | – | 2.5e-11 |
| CGBL | Bias dependent component of Gate to substrate overlap cap | – | 0 |
| CGBN | Gate to substrate overlap cap per unit channel length per fin per finger | – | 0 |
| CGBO | Gate to substrate overlap cap per unit channel length per finger per NGCON | – | 0 |
| CGDL | | – | 0 |
| CGDO | Non LDD region drain-gate overlap capacitance per unit channel width | – | 0 |
| CGDP | Constant gate-to-drain fringe capacitance (CGEOMOD=1) | – | 0 |
| CGEO1SW | | – | 0 |
| CGEOA | Fitting parameter for CGEOMOD=2 | – | 1 |
| CGEOB | Fitting parameter for CGEOMOD=2 | – | 0 |
| CGEOC | Fitting parameter for CGEOMOD=2 | – | 0 |
| CGEOD | Fitting parameter for CGEOMOD=2 | – | 0 |
| CGEOE | Fitting parameter for CGEOMOD=2 | – | 1 |
| CGEOMOD | parasitic capacitance model selector | – | 0 |
| CGIDL | parameter for body-effect of GIDL | $V^3$ | 0 |
| CGISL | parameter for body-effect of GISL | $V^3$ | 0.5 |
| CGSL | | – | 0 |
| CGSO | Non LDD region source-gate overlap capacitance per unit channel width | – | 0 |
| CGSP | Constant gate-to-source fringe capacitance (CGEOMOD=1) | – | 0 |
| CHARGEWF | Average Channel Charge Weighting Factor, +1:source-side, 0:middle, -1:drain-side | – | 0 |
| CIGBACC | parameter for Igb in accumulation | – | 0.075 |
| CIGBINV | parameter for Igb in inversion | – | 0.006 |
| CIGC | parameter for Igc in inversion | – | 0.075 |
| CIGD | parameter for Igd in inversion | – | 0 |
| CIGS | parameter for Igs in inversion | – | 0.075 |

Table 2.93: BSIM-CMG FINFET v107.0.0 Device Model Parameters

| Parameter | Description | Units | Default |
|---|---|---|---|
| CIT | parameter for interface trap | – | 0 |
| CJD | Unit area drain-side junction capacitance at zero bias | – | 0 |
| CJS | Unit area source-side junction capacitance at zero bias | – | 0.0005 |
| CJSWD | Unit length drain-side sidewall junction capacitance at zero bias | – | 0 |
| CJSWGD | Unit length drain-side gate sidewall junction capacitance at zero bias | – | 0 |
| CJSWGS | Unit length source-side gate sidewall junction capacitance at zero bias | – | 0 |
| CJSWS | Unit length source-side sidewall junction capacitance at zero bias | – | 5e-10 |
| CKAPPAB | | – | 0.6 |
| CKAPPAD | | – | 0 |
| CKAPPAS | | – | 0.6 |
| COREMOD | Surface potential algorithm | – | 0 |
| COVD | Constant g/d overlap capacitance (CGEOMOD=1) | – | 0 |
| COVS | Constant g/s overlap capacitance (CGEOMOD=1) | – | 0 |
| CRATIO | | – | 0.5 |
| CSDESW | Coefficient for source/drain to substrate sidewall cap | – | 0 |
| CTH0 | Thermal capacitance | – | 1e-05 |
| D | Diameter of the cylinder (GEOMOD=3) | – | 4e-08 |
| DELTAPRSD | | – | 0 |
| DELTAVSAT | | – | 1 |
| DELTAVSATCV | | – | 0 |
| DELTAW | change of effective width due to shape of fin/cylinder | – | 0 |
| DELTAWCV | CV change of effective width due to shape of fin/cylinder | – | 0 |
| DELVFBACC | Change in Flatband Voltage; Vfb_accumulation-Vfb_inversion | – | 0 |
| DELVTRAND | Variability in Vth | – | 0 |
| DEVTYPE | | – | 1 |
| DLBIN | Delta L for Binning | – | 0 |

Table 2.93: BSIM-CMG FINFET v107.0.0 Device Model Parameters

| Parameter | Description | Units | Default |
|---|---|---|---|
| DLC | Delta L for C-V model | – | 0 |
| DLCACC | Delta L for C-V model in accumulation region (CAPMOD=1, BULKMOD=1) | – | 0 |
| DLCIGD | Delta L for Igd model | – | 0 |
| DLCIGS | Delta L for Igs model | – | 0 |
| DROUT | | – | 1.06 |
| DSUB | DIBL exponent coefficient | – | 1.06 |
| DTEMP | Variability in Device Temperature | – | 0 |
| DVT0 | SCE coefficient | – | 0 |
| DVT1 | SCE exponent coefficient, after binning should be in (0:inf) | – | 0.6 |
| DVT1SS | Subthreshold Swing exponent coefficient, after binning should be in (0:inf) | – | 0 |
| DVTP0 | Coefficient for Drain-Induced Vth Shift (DITS) | – | 0 |
| DVTP1 | DITS exponent coefficient | – | 0 |
| DVTSHIFT | Vth shift handle | – | 0 |
| EASUB | Electron affinity of substrate, eV | – | 4.05 |
| EF | | – | 1 |
| EGIDL | band bending parameter for GIDL | V | 0 |
| EGISL | band bending parameter for GISL | V | 0.2 |
| EIGBINV | parameter for Igb in inversion | – | 1.1 |
| EM | | – | 4.1e+07 |
| EMOBT | | – | 0 |
| EOT | equivalent oxide thickness in meters | – | 1e-09 |
| EOTACC | equivalent oxide thickness for accumulation region in meters | m | 0 |
| EOTBOX | equivalent oxide thickness of the buried oxide (SOI FinFET) or STI (bulk FinFET) in meters | – | 1.4e-07 |
| EPSROX | Relative dielectric constant of the gate dielectric | – | 3.9 |
| EPSRSP | Relative dielectric constant of the spacer | – | 3.9 |
| EPSRSUB | Relative dielectric constant of the channel material | – | 11.9 |
| ESATII | Saturation channel E-Field for Iii | V/m | 1e+07 |
| ETA0 | DIBL coefficient | – | 0.6 |
| ETA0N1 | NFIN dependence of ETA0 | – | 0 |
| ETA0N2 | NFIN dependence of ETA0 | – | 100000 |

Table 2.93: BSIM-CMG FINFET v107.0.0 Device Model Parameters

| Parameter | Description | Units | Default |
|---|---|---|---|
| ETAOR | Reverse-mode DIBL coefficient (Experimental) | – | 0 |
| ETAMOB | | – | 2 |
| ETAQM | Bulk charge coefficient for Tcen | – | 0.54 |
| EU | | – | 2.5 |
| FECH | End-channel factor, for different orientation/shape | – | 1 |
| FECHCV | CV end-channel factor, for different orientaion/shape | – | 1 |
| FPITCH | Fin pitch | – | 8e-08 |
| GEOMOD | Geometry mode selector | – | 1 |
| GIDLMOD | GIDL/GISL current switcher | – | 0 |
| HEPI | Height of the raised source/drain on top of the fin | – | 1e-08 |
| HFIN | Fin height in meters | – | 3e-08 |
| IDSOMULT | Variability in Drain current for misc. reasons | – | 1 |
| IGBMOD | model selector for Igb | – | 0 |
| IGCMOD | model selector for Igc, Igs, and Igd | – | 0 |
| IGT | Gate Current Temperature Dependence | – | 2.5 |
| IIMOD | Impact ionization model switch | – | 0 |
| IIT | Impact Ionization Temperature Dependence, IIMOD=1 | – | -0.5 |
| IJTHDFWD | Forward drain diode breakdown limiting current | – | 0 |
| IJTHDREV | Reverse drain diode breakdown limiting current | – | 0 |
| IJTHSFWD | Forward source diode breakdown limiting current | – | 0.1 |
| IJTHSREV | Reverse source diode breakdown limiting current | – | 0.1 |
| IMIN | Parameter for Vgs Clamping for inversion region calc. in accumulation | – | 1e-15 |
| JSD | Bottom drain junction reverse saturation current density | – | 0 |
| JSS | Bottom source junction reverse saturation current density | – | 0.0001 |
| JSWD | Unit length reverse saturation current for sidewall drain junction | – | 0 |
| JSWGD | Unit length reverse saturation current for gate-edge sidewall drain junction | – | 0 |
| JSWGS | Unit length reverse saturation current for gate-edge sidewall source junction | – | 0 |

Table 2.93: BSIM-CMG FINFET v107.0.0 Device Model Parameters

| Parameter | Description | Units | Default |
|---|---|---|---|
| JSWS | Unit length reverse saturation current for sidewall source junction | – | 0 |
| JTSD | Bottom drain junction trap-assisted saturation current density | – | 0 |
| JTSS | Bottom source junction trap-assisted saturation current density | – | 0 |
| JTSSWD | Unit length trap-assisted saturation current for sidewall drain junction | – | 0 |
| JTSSWGD | Unit length trap-assisted saturation current for gate-edge sidewall drain junction | – | 0 |
| JTSSWGS | Unit length trap-assisted saturation current for gate-edge sidewall source junction | – | 0 |
| JTSSWS | Unit length trap-assisted saturation current for sidewall source junction | – | 0 |
| JTWEFF | Trap assisted tunneling current width dependence | – | 0 |
| K0 | Lateral NUD voltage parameter, V | – | 0 |
| K01 | Temperature dependence of lateral NUD voltage parameter, V/K | – | 0 |
| K0SI | Correction factor for strong inversion, used in Mnud, after binnig should be from (0:inf) | – | 1 |
| K0SI1 | Temperature dependence of K0SI, 1/K | – | 0 |
| K1 | Body effect coefficient for sub-threshold region | – | 0 |
| K11 | Temperature dependence of K1 | – | 0 |
| K1RSCE | K1 for reverse short channel effect calculation | – | 0 |
| K1SAT | Correction factor for K1 in saturation (high Vds) | – | 0 |
| K1SAT1 | Temperature dependence of K1SAT1 | – | 0 |
| K1SI | Correction factor for strong inversion, used in Mob | – | 0 |
| K1SI1 | Temperature dependence of K1SI, 1/K | – | 0 |
| KSATIV | | – | 1 |
| KT1 | Vth Temperature Coefficient (V) | – | 0 |
| KT1L | Vth Temperature L Coefficient (m-V) | – | 0 |
| L | Designed Gate Length | – | 3e-08 |
| LA1 | | – | 0 |
| LA11 | | – | 0 |
| LA2 | | – | 0 |
| LA21 | | – | 0 |

Table 2.93: BSIM-CMG FINFET v107.0.0 Device Model Parameters

| Parameter | Description | Units | Default |
|---|---|---|---|
| LAGIDL | | – | 0 |
| LAGISL | | – | 0 |
| LAIGBACC | | – | 0 |
| LAIGBACC1 | | – | 0 |
| LAIGBINV | | – | 0 |
| LAIGBINV1 | | – | 0 |
| LAIGC | | – | 0 |
| LAIGC1 | | – | 0 |
| LAIGD | | – | 0 |
| LAIGD1 | | – | 0 |
| LAIGEN | | – | 0 |
| LAIGS | | – | 0 |
| LAIGS1 | | – | 0 |
| LALPHA0 | | – | 0 |
| LALPHA1 | | – | 0 |
| LALPHAII0 | | – | 0 |
| LALPHAII1 | | – | 0 |
| LAT | | – | 0 |
| LBETA0 | | – | 0 |
| LBETAII0 | | – | 0 |
| LBETAII1 | | – | 0 |
| LBETAII2 | | – | 0 |
| LBGIDL | | – | 0 |
| LBGISL | | – | 0 |
| LBIGBACC | | – | 0 |
| LBIGBINV | | – | 0 |
| LBIGC | | – | 0 |
| LBIGD | | – | 0 |
| LBIGEN | | – | 0 |
| LBIGS | | – | 0 |
| LCDSC | | – | 0 |
| LCDSCD | | – | 0 |
| LCDSCDR | | – | 0 |
| LCFD | | – | 0 |

Table 2.93: BSIM-CMG FINFET v107.0.0 Device Model Parameters

| Parameter | Description | Units | Default |
|---|---|---|---|
| LCFS | | – | 0 |
| LCGBL | | – | 0 |
| LCGDL | | – | 0 |
| LCGIDL | | – | 0 |
| LCGISL | | – | 0 |
| LCGSL | | – | 0 |
| LCIGBACC | | – | 0 |
| LCIGBINV | | – | 0 |
| LCIGC | | – | 0 |
| LCIGD | | – | 0 |
| LCIGS | | – | 0 |
| LCIT | | – | 0 |
| LCKAPPAB | | – | 0 |
| LCKAPPAD | | – | 0 |
| LCKAPPAS | | – | 0 |
| LCOVD | | – | 0 |
| LCOVS | | – | 0 |
| LDELTAVSAT | | – | 0 |
| LDELTAVSATCV | | – | 0 |
| LDROUT | | – | 0 |
| LDSUB | | – | 0 |
| LDVT0 | | – | 0 |
| LDVT1 | | – | 0 |
| LDVT1SS | | – | 0 |
| LDVTB | | – | 0 |
| LDVTSHIFT | | – | 0 |
| LEGIDL | | – | 0 |
| LEGISL | | – | 0 |
| LEIGBINV | | – | 0 |
| LEMOBT | | – | 0 |
| LESATII | | – | 0 |
| LETA0 | | – | 0 |
| LETA0R | | – | 0 |
| LETAMOB | | – | 0 |

Table 2.93: BSIM-CMG FINFET v107.0.0 Device Model Parameters

| Parameter | Description | Units | Default |
|---|---|---|---|
| LEU | | – | 0 |
| LIGT | | – | 0 |
| LII | Channel length dependent parameter of Iii | Vm | 5e-10 |
| LIIT | | – | 0 |
| LINT | Length reduction parameter (dopant diffusion effect) | – | 0 |
| LINTIGEN | Lint for Thermal Generation Current | – | 0 |
| LINTNOI | | – | 0 |
| LK0 | | – | 0 |
| LK01 | | – | 0 |
| LK0SI | | – | 0 |
| LK0SI1 | | – | 0 |
| LK1 | | – | 0 |
| LK11 | | – | 0 |
| LK1RSCE | | – | 0 |
| LK1SAT | | – | 0 |
| LK1SAT1 | | – | 0 |
| LK1SI | | – | 0 |
| LK1SI1 | | – | 0 |
| LKSATIV | | – | 0 |
| LKT1 | | – | 0 |
| LL | Length reduction parameter (dopant diffusion effect) | – | 0 |
| LLC | Length reduction parameter (dopant diffusion effect) | – | 0 |
| LLII | | – | 0 |
| LLN | Length reduction parameter (dopant diffusion effect) | – | 1 |
| LLPE0 | | – | 0 |
| LLPEB | | – | 0 |
| LMEXP | | – | 0 |
| LMEXPR | | – | 0 |
| LNBODY | | – | 0 |
| LNGATE | | – | 0 |
| LNIGBACC | | – | 0 |

Table 2.93: BSIM-CMG FINFET v107.0.0 Device Model Parameters

| Parameter | Description | Units | Default |
|---|---|---|---|
| LNIGBINV | | – | 0 |
| LNTGEN | | – | 0 |
| LNTOX | | – | 0 |
| LPA | | – | 1 |
| LPCLM | | – | 0 |
| LPCLMCV | | – | 0 |
| LPCLMG | | – | 0 |
| LPDIBL1 | | – | 0 |
| LPDIBL1R | | – | 0 |
| LPDIBL2 | | – | 0 |
| LPE0 | Equivalent length of pocket region at zero bias | – | 5e-09 |
| LPGIDL | | – | 0 |
| LPGISL | | – | 0 |
| LPHIBE | | – | 0 |
| LPHIG | | – | 0 |
| LPHIN | | – | 0 |
| LPIGCD | | – | 0 |
| LPOXEDGE | | – | 0 |
| LPRT | | – | 0 |
| LPRWGD | | – | 0 |
| LPRWGS | | – | 0 |
| LPSAT | | – | 0 |
| LPSATCV | | – | 0 |
| LPTWG | | – | 0 |
| LPTWGR | | – | 0 |
| LPTWGT | | – | 0 |
| LPVAG | | – | 0 |
| LQMFACTOR | | – | 0 |
| LQMTCENCV | | – | 0 |
| LQMTCENCVA | | – | 0 |
| LQMTCENIV | | – | 0 |
| LRDSW | | – | 0 |
| LRDW | | – | 0 |
| LRSD | Length of the source/drain | – | 0 |

Table 2.93: BSIM-CMG FINFET v107.0.0 Device Model Parameters

| Parameter | Description | Units | Default |
|---|---|---|---|
| LRSW | | – | 0 |
| LSII0 | | – | 0 |
| LSII1 | | – | 0 |
| LSII2 | | – | 0 |
| LSIID | | – | 0 |
| LSP | | – | 0 |
| LSTTHETASAT | | – | 0 |
| LTGIDL | | – | 0 |
| LTII | | – | 0 |
| LTSS | | – | 0 |
| LU0 | | – | 0 |
| LUA | | – | 0 |
| LUA1 | | – | 0 |
| LUC | | – | 0 |
| LUC1 | | – | 0 |
| LUCS | | – | 0 |
| LUCSTE | | – | 0 |
| LUD | | – | 0 |
| LUD1 | | – | 0 |
| LUP | | – | 0 |
| LUTE | | – | 0 |
| LUTL | | – | 0 |
| LVSAT | | – | 0 |
| LVSAT1 | | – | 0 |
| LVSAT1R | | – | 0 |
| LVSATCV | | – | 0 |
| LWR | | – | 0 |
| LXRCRG1 | | – | 0 |
| LXRCRG2 | | – | 0 |
| MEXP | | – | 4 |
| MEXPR | | – | 0 |
| MJD | Drain bottom junction capacitance grading coefficient | – | 0 |
| MJD2 | Drain bottom two-step second junction capacitance grading coefficient | – | 0 |

Table 2.93: BSIM-CMG FINFET v107.0.0 Device Model Parameters

| Parameter | Description | Units | Default |
|---|---|---|---|
| MJS | Source bottom junction capacitance grading coefficient | – | 0.5 |
| MJS2 | Source bottom two-step second junction capacitance grading coefficient | – | 0.125 |
| MJSWD | Drain sidewall junction capacitance grading coefficient | – | 0 |
| MJSWD2 | Drain sidewall two-step second junction capacitance grading coefficient | – | 0 |
| MJSWGD | Drain-side gate sidewall junction capacitance grading coefficient | – | 0 |
| MJSWGD2 | Drain-side gate sidewall two-step | – | 0 |
| MJSWGS | Source-side gate sidewall junction capacitance grading coefficient | – | 0 |
| MJSWGS2 | Source-side gate sidewall two-step | – | 0 |
| MJSWS | Source sidewall junction capacitance grading coefficient | – | 0.33 |
| MJSWS2 | Source sidewall two-step second junction capacitance grading coefficient | – | 0.083 |
| NA1 | | – | 0 |
| NA11 | | – | 0 |
| NA2 | | – | 0 |
| NA21 | | – | 0 |
| NAGIDL | | – | 0 |
| NAGISL | | – | 0 |
| NAIGBACC | | – | 0 |
| NAIGBACC1 | | – | 0 |
| NAIGBINV | | – | 0 |
| NAIGBINV1 | | – | 0 |
| NAIGC | | – | 0 |
| NAIGC1 | | – | 0 |
| NAIGD | | – | 0 |
| NAIGD1 | | – | 0 |
| NAIGEN | | – | 0 |
| NAIGS | | – | 0 |
| NAIGS1 | | – | 0 |
| NALPHA0 | | – | 0 |
| NALPHA1 | | – | 0 |

Table 2.93: BSIM-CMG FINFET v107.0.0 Device Model Parameters

| Parameter | Description | Units | Default |
|---|---|---|---|
| NALPHAII0 | | – | 0 |
| NALPHAII1 | | – | 0 |
| NAT | | – | 0 |
| NBETA0 | | – | 0 |
| NBETAII0 | | – | 0 |
| NBETAII1 | | – | 0 |
| NBETAII2 | | – | 0 |
| NBGIDL | | – | 0 |
| NBGISL | | – | 0 |
| NBIGBACC | | – | 0 |
| NBIGBINV | | – | 0 |
| NBIGC | | – | 0 |
| NBIGD | | – | 0 |
| NBIGEN | | – | 0 |
| NBIGS | | – | 0 |
| NBODY | channel (body) doping | – | 1e+22 |
| NBODYN1 | NFIN dependence of channel (body) doping | – | 0 |
| NBODYN2 | NFIN dependence of channel (body) doping | – | 100000 |
| NC0SUB | Conduction band density of states, m-3 | – | 2.86e+25 |
| NCDSC | | – | 0 |
| NCDSCD | | – | 0 |
| NCDSCDR | | – | 0 |
| NCFD | | – | 0 |
| NCFS | | – | 0 |
| NCGBL | | – | 0 |
| NCGDL | | – | 0 |
| NCGIDL | | – | 0 |
| NCGISL | | – | 0 |
| NCGSL | | – | 0 |
| NCIGBACC | | – | 0 |
| NCIGBINV | | – | 0 |
| NCIGC | | – | 0 |
| NCIGD | | – | 0 |
| NCIGS | | – | 0 |

Table 2.93: BSIM-CMG FINFET v107.0.0 Device Model Parameters

| Parameter | Description | Units | Default |
|---|---|---|---|
| NCIT | | – | 0 |
| NCKAPPAB | | – | 0 |
| NCKAPPAD | | – | 0 |
| NCKAPPAS | | – | 0 |
| NCOVD | | – | 0 |
| NCOVS | | – | 0 |
| NDELTAVSAT | | – | 0 |
| NDELTAVSATCV | | – | 0 |
| NDROUT | | – | 0 |
| NDSUB | | – | 0 |
| NDVT0 | | – | 0 |
| NDVT1 | | – | 0 |
| NDVT1SS | | – | 0 |
| NDVTB | | – | 0 |
| NDVTSHIFT | | – | 0 |
| NEGIDL | | – | 0 |
| NEGISL | | – | 0 |
| NEIGBINV | | – | 0 |
| NEMOBT | | – | 0 |
| NESATII | | – | 0 |
| NETA0 | | – | 0 |
| NETA0R | | – | 0 |
| NETAMOB | | – | 0 |
| NEU | | – | 0 |
| NF | Number of fingers | – | 1 |
| NFIN | Number of fins per finger (real number enables optimization) | – | 1 |
| NGATE | Parameter for Poly Gate Doping, for metal gate please set NGATE = 0 | – | 0 |
| NGCON | number of gate contact (1 or 2 sided) | – | 1 |
| NI0SUB | Intrinsic carrier constant at 300.15K, m-3 | – | 1.1e+16 |
| NIGBACC | parameter for Igb in accumulation | – | 1 |
| NIGBINV | parameter for Igb in inversion | – | 3 |
| NIGT | | – | 0 |
| NIIT | | – | 0 |

Table 2.93: BSIM-CMG FINFET v107.0.0 Device Model Parameters

| Parameter | Description | Units | Default |
|---|---|---|---|
| NJD | Drain junction emission coefficient | – | 0 |
| NJS | Source junction emission coefficient | – | 1 |
| NJTS | Non-ideality factor for JTSS | – | 20 |
| NJTSD | Non-ideality factor for JTSD | – | 0 |
| NJTSSW | Non-ideality factor for JTSSWS | – | 20 |
| NJTSSWD | Non-ideality factor for JTSSWD | – | 0 |
| NJTSSWG | Non-ideality factor for JTSSWGS | – | 20 |
| NJTSSWGD | Non-ideality factor for JTSSWGD | – | 0 |
| NK0 | | – | 0 |
| NK01 | | – | 0 |
| NK0SI | | – | 0 |
| NK0SI1 | | – | 0 |
| NK1 | | – | 0 |
| NK11 | | – | 0 |
| NK1RSCE | | – | 0 |
| NK1SAT | | – | 0 |
| NK1SAT1 | | – | 0 |
| NK1SI | | – | 0 |
| NK1SI1 | | – | 0 |
| NKSATIV | | – | 0 |
| NKT1 | | – | 0 |
| NLII | | – | 0 |
| NLPE0 | | – | 0 |
| NLPEB | | – | 0 |
| NMEXP | | – | 0 |
| NMEXPR | | – | 0 |
| NNBODY | | – | 0 |
| NNGATE | | – | 0 |
| NNIGBACC | | – | 0 |
| NNIGBINV | | – | 0 |
| NNTGEN | | – | 0 |
| NNTOX | | – | 0 |
| NOIA | | – | 6.25e+39 |
| NOIB | | – | 3.125e+24 |

Table 2.93: BSIM-CMG FINFET v107.0.0 Device Model Parameters

| Parameter | Description | Units | Default |
|---|---|---|---|
| NOIC | | – | 8.75e+07 |
| NPCLM | | – | 0 |
| NPCLMCV | | – | 0 |
| NPCLMG | | – | 0 |
| NPDIBL1 | | – | 0 |
| NPDIBL1R | | – | 0 |
| NPDIBL2 | | – | 0 |
| NPGIDL | | – | 0 |
| NPGISL | | – | 0 |
| NPHIBE | | – | 0 |
| NPHIG | | – | 0 |
| NPHIN | | – | 0 |
| NPIGCD | | – | 0 |
| NPOXEDGE | | – | 0 |
| NPRT | | – | 0 |
| NPRWGD | | – | 0 |
| NPRWGS | | – | 0 |
| NPSAT | | – | 0 |
| NPSATCV | | – | 0 |
| NPTWG | | – | 0 |
| NPTWGR | | – | 0 |
| NPTWGT | | – | 0 |
| NPVAG | | – | 0 |
| NQMFACTOR | | – | 0 |
| NQMTCENCV | | – | 0 |
| NQMTCENCVA | | – | 0 |
| NQMTCENIV | | – | 0 |
| NQSMOD | | – | 0 |
| NRD | Number of source diffusion squares | – | 0 |
| NRDSW | | – | 0 |
| NRDW | | – | 0 |
| NRS | Number of source diffusion squares | – | 0 |
| NRSW | | – | 0 |
| NSD | Source/drain active doping concentration in m-3 | – | 2e+26 |

Table 2.93: BSIM-CMG FINFET v107.0.0 Device Model Parameters

| Parameter | Description | Units | Default |
|---|---|---|---|
| NSDE | Source/drain active doping concentration at Leff edge | – | 2e+25 |
| NSEG | Number of segments for NQSMOD=3 (3,5 and 10 supported) | – | 4 |
| NSII0 | | – | 0 |
| NSII1 | | – | 0 |
| NSII2 | | – | 0 |
| NSIID | | – | 0 |
| NSTTHETASAT | | – | 0 |
| NTGEN | Thermal Generation Current Parameter | – | 1 |
| NTGIDL | | – | 0 |
| NTII | | – | 0 |
| NTNOI | | – | 1 |
| NTOX | Exponent for Tox ratio | – | 1 |
| NTSS | | – | 0 |
| NU0 | | – | 0 |
| NUA | | – | 0 |
| NUA1 | | – | 0 |
| NUC | | – | 0 |
| NUC1 | | – | 0 |
| NUCS | | – | 0 |
| NUCSTE | | – | 0 |
| NUD | | – | 0 |
| NUD1 | | – | 0 |
| NUP | | – | 0 |
| NUTE | | – | 0 |
| NUTL | | – | 0 |
| NVSAT | | – | 0 |
| NVSAT1 | | – | 0 |
| NVSAT1R | | – | 0 |
| NVSATCV | | – | 0 |
| NWR | | – | 0 |
| NXRCRG1 | | – | 0 |
| NXRCRG2 | | – | 0 |
| PA1 | | – | 0 |

Table 2.93: BSIM-CMG FINFET v107.0.0 Device Model Parameters

| Parameter | Description | Units | Default |
|---|---|---|---|
| PA11 | | – | 0 |
| PA2 | | – | 0 |
| PA21 | | – | 0 |
| PAGIDL | | – | 0 |
| PAGISL | | – | 0 |
| PAIGBACC | | – | 0 |
| PAIGBACC1 | | – | 0 |
| PAIGBINV | | – | 0 |
| PAIGBINV1 | | – | 0 |
| PAIGC | | – | 0 |
| PAIGC1 | | – | 0 |
| PAIGD | | – | 0 |
| PAIGD1 | | – | 0 |
| PAIGEN | | – | 0 |
| PAIGS | | – | 0 |
| PAIGS1 | | – | 0 |
| PALPHA0 | | – | 0 |
| PALPHA1 | | – | 0 |
| PALPHAII0 | | – | 0 |
| PALPHAII1 | | – | 0 |
| PAT | | – | 0 |
| PBD | Drain-side bulk junction built-in potential | – | 0 |
| PBETA0 | | – | 0 |
| PBETAII0 | | – | 0 |
| PBETAII1 | | – | 0 |
| PBETAII2 | | – | 0 |
| PBGIDL | | – | 0 |
| PBGISL | | – | 0 |
| PBIGBACC | | – | 0 |
| PBIGBINV | | – | 0 |
| PBIGC | | – | 0 |
| PBIGD | | – | 0 |
| PBIGEN | | – | 0 |
| PBIGS | | – | 0 |

Table 2.93: BSIM-CMG FINFET v107.0.0 Device Model Parameters

| Parameter | Description | Units | Default |
|---|---|---|---|
| PBS | Source-side bulk junction built-in potential | – | 1 |
| PBSWD | Built-in potential for Drain-side sidewall junction capacitance | – | 0 |
| PBSWGD | Built-in potential for Drain-side gate sidewall junction capacitance | – | 0 |
| PBSWGS | Built-in potential for Source-side gate sidewall junction capacitance | – | 0 |
| PBSWS | Built-in potential for Source-side sidewall junction capacitance | – | 1 |
| PCDSC | | – | 0 |
| PCDSCD | | – | 0 |
| PCDSCDR | | – | 0 |
| PCFD | | – | 0 |
| PCFS | | – | 0 |
| PCGBL | | – | 0 |
| PCGDL | | – | 0 |
| PCGIDL | | – | 0 |
| PCGISL | | – | 0 |
| PCGSL | | – | 0 |
| PCIGBACC | | – | 0 |
| PCIGBINV | | – | 0 |
| PCIGC | | – | 0 |
| PCIGD | | – | 0 |
| PCIGS | | – | 0 |
| PCIT | | – | 0 |
| PCKAPPAB | | – | 0 |
| PCKAPPAD | | – | 0 |
| PCKAPPAS | | – | 0 |
| PCLM | | – | 0.013 |
| PCLMCV | CLM parameter for Short Channel CV | – | 0 |
| PCLMG | | – | 0 |
| PCOVD | | – | 0 |
| PCOVS | | – | 0 |
| PDEJ | Drain to substrate PN junction perimeter (BULKMOD=1) | – | 0 |
| PDELTAVSAT | | – | 0 |

Table 2.93: BSIM-CMG FINFET v107.0.0 Device Model Parameters

| Parameter | Description | Units | Default |
|---|---|---|---|
| PDELTAVSATCV | | – | 0 |
| PDEO | Perimeter of drain to substrate overlap region through oxide | – | 0 |
| PDIBL1 | DIBL Output Conductance parameter - forward mode | – | 1.3 |
| PDIBL1R | DIBL Output Conductance parameter - reverse mode | – | 0 |
| PDIBL2 | DIBL Output Conductance parameter | – | 0.0002 |
| PDROUT | | – | 0 |
| PDSUB | | – | 0 |
| PDVT0 | | – | 0 |
| PDVT1 | | – | 0 |
| PDVT1SS | | – | 0 |
| PDVTB | | – | 0 |
| PDVTSHIFT | | – | 0 |
| PEGIDL | | – | 0 |
| PEGISL | | – | 0 |
| PEIGBINV | | – | 0 |
| PEMOBT | | – | 0 |
| PESATII | | – | 0 |
| PETA0 | | – | 0 |
| PETA0R | | – | 0 |
| PETAMOB | | – | 0 |
| PEU | | – | 0 |
| PGIDL | parameter for body-bias effect on GIDL | – | 0 |
| PGISL | parameter for body-bias effect on GISL | – | 1 |
| PHIBE | Body effect voltage parameter, V, after binnig should be from [0.2:1.2] | – | 0.7 |
| PHIG | Gate workfunction, eV | – | 4.61 |
| PHIGL | Length dependence of Gate workfunction, eV/m | – | 0 |
| PHIGN1 | NFIN dependence of Gate workfunction | – | 0 |
| PHIGN2 | NFIN dependence of Gate workfunction | – | 100000 |
| PHIN | Nonuniform vertical doping effect on surface potential, V | – | 0.05 |
| PIGCD | parameter for Igc partition | – | 1 |
| PIGT | | – | 0 |

Table 2.93: BSIM-CMG FINFET v107.0.0 Device Model Parameters

| Parameter | Description | Units | Default |
|---|---|---|---|
| PIIT | | – | 0 |
| PK0 | | – | 0 |
| PK01 | | – | 0 |
| PK0SI | | – | 0 |
| PK0SI1 | | – | 0 |
| PK1 | | – | 0 |
| PK11 | | – | 0 |
| PK1RSCE | | – | 0 |
| PK1SAT | | – | 0 |
| PK1SAT1 | | – | 0 |
| PK1SI | | – | 0 |
| PK1SI1 | | – | 0 |
| PKSATIV | | – | 0 |
| PKT1 | | – | 0 |
| PLII | | – | 0 |
| PLPE0 | | – | 0 |
| PLPEB | | – | 0 |
| PMEXP | | – | 0 |
| PMEXPR | | – | 0 |
| PNBODY | | – | 0 |
| PNGATE | | – | 0 |
| PNIGBACC | | – | 0 |
| PNIGBINV | | – | 0 |
| PNTGEN | | – | 0 |
| PNTOX | | – | 0 |
| POXEDGE | Factor for the gate edge Tox | – | 1 |
| PPCLM | | – | 0 |
| PPCLMCV | | – | 0 |
| PPCLMG | | – | 0 |
| PPDIBL1 | | – | 0 |
| PPDIBL1R | | – | 0 |
| PPDIBL2 | | – | 0 |
| PPGIDL | | – | 0 |
| PPGISL | | – | 0 |

Table 2.93: BSIM-CMG FINFET v107.0.0 Device Model Parameters

| Parameter | Description | Units | Default |
|---|---|---|---|
| PPHIBE | | – | 0 |
| PPHIG | | – | 0 |
| PPHIN | | – | 0 |
| PPIGCD | | – | 0 |
| PPOXEDGE | | – | 0 |
| PPRT | | – | 0 |
| PPRWGD | | – | 0 |
| PPRWGS | | – | 0 |
| PPSAT | | – | 0 |
| PPSATCV | | – | 0 |
| PPTWG | | – | 0 |
| PPTWGR | | – | 0 |
| PPTWGT | | – | 0 |
| PPVAG | | – | 0 |
| PQM | Slope of normalized Tcen in inversion | – | 0.66 |
| PQMACC | Slope of normalized Tcen in accumulation | – | 0.66 |
| PQMFACTOR | | – | 0 |
| PQMTCENCV | | – | 0 |
| PQMTCENCVA | | – | 0 |
| PQMTCENIV | | – | 0 |
| PRDDR | Drain side quasi-saturation parameter | – | 0 |
| PRDSW | | – | 0 |
| PRDW | | – | 0 |
| PRSDEND | | – | 0 |
| PRSDR | Source side quasi-saturation parameter | – | 1 |
| PRSW | | – | 0 |
| PRT | | – | 0.001 |
| PRWGD | Gate bias dependence of drain extension resistance | $V^{-1}$ | 0 |
| PRWGS | Gate bias dependence of source extension resistance | $V^{-1}$ | 0 |
| PSAT | Velocity saturation exponent, after binnig should be from [2.0:inf) | – | 2 |
| PSATCV | Velocity saturation exponent for C-V | – | 0 |

Table 2.93: BSIM-CMG FINFET v107.0.0 Device Model Parameters

| Parameter | Description | Units | Default |
|---|---|---|---|
| PSEJ | Source to substrate PN junction perimeter (BULKMOD=1) | – | 0 |
| PSEO | Perimeter of source to substrate overlap region through oxide | – | 0 |
| PSII0 | | – | 0 |
| PSII1 | | – | 0 |
| PSII2 | | – | 0 |
| PSIID | | – | 0 |
| PSTTHETASAT | | – | 0 |
| PTGIDL | | – | 0 |
| PTII | | – | 0 |
| PTSS | | – | 0 |
| PTWG | Gmsat degradation parameter - forward mode | – | 0 |
| PTWGR | Gmsat degradation parameter - reverse mode | – | 0 |
| PTWGT | | – | 0.004 |
| PU0 | | – | 0 |
| PUA | | – | 0 |
| PUA1 | | – | 0 |
| PUC | | – | 0 |
| PUC1 | | – | 0 |
| PUCS | | – | 0 |
| PUCSTE | | – | 0 |
| PUD | | – | 0 |
| PUD1 | | – | 0 |
| PUP | | – | 0 |
| PUTE | | – | 0 |
| PUTL | | – | 0 |
| PVAG | | – | 1 |
| PVSAT | | – | 0 |
| PVSAT1 | | – | 0 |
| PVSAT1R | | – | 0 |
| PVSATCV | | – | 0 |
| PWR | | – | 0 |
| PXRCRG1 | | – | 0 |
| PXRCRG2 | | – | 0 |

Table 2.93: BSIM-CMG FINFET v107.0.0 Device Model Parameters

| Parameter | Description | Units | Default |
|---|---|---|---|
| QM0 | Knee-Point for Tcen in inversion (Charge normalized to Cox) | – | 0.001 |
| QM0ACC | Knee-Point for Tcen in accumulation (Charge normalized to Cox) | – | 0.001 |
| QMFACTOR | Prefactor + switch for QM Vth correction | – | 0 |
| QMTCENCV | Prefactor + switch for QM Width and Toxeff correction for CV | – | 0 |
| QMTCENCVA | Prefactor + switch for QM Width and Toxeff correction for CV (accumulation region) | – | 0 |
| QMTCENIV | Prefactor + switch for QM Width correction for IV | – | 0 |
| RDDR | Drain side drift resistance parameter - forward mode | – | 0 |
| RDDRR | Drain side drift resistance parameter - reverse mode | – | 0 |
| RDSMOD | Resistance model selector | – | 0 |
| RDSW | | – | 100 |
| RDSWMIN | | – | 0 |
| RDW | | – | 50 |
| RDWMIN | | – | 0 |
| RGATEMOD | Gate electrode resistor and ge node switcher — NOT USED IN XYCE | – | 0 |
| RGEOA | Fitting parameter for RGEOMOD=1 | – | 1 |
| RGEOB | Fitting parameter for RGEOMOD=1 | – | 0 |
| RGEOC | Fitting parameter for RGEOMOD=1 | – | 0 |
| RGEOD | Fitting parameter for RGEOMOD=1 | – | 0 |
| RGEOE | Fitting parameter for RGEOMOD=1 | – | 0 |
| RGEOMOD | Bias independent parasitic resistance model selector | – | 0 |
| RGEXT | Effective gate electrode external resistance | – | 0 |
| RGFIN | Effective gate electrode per finger per fin resistance | – | 0.001 |
| RHOC | | – | 1e-12 |
| RHORSD | | – | 1 |
| RSDR | Source side drift resistance parameter - forward mode | – | 0 |
| RSDRR | Source side drift resistance parameter - reverse mode | – | 0 |
| RSHD | Drain-side sheet resistance | – | 0 |

Table 2.93: BSIM-CMG FINFET v107.0.0 Device Model Parameters

| Parameter | Description | Units | Default |
|---|---|---|---|
| RSHS | Source-side sheet resistance | – | 0 |
| RSW | | – | 50 |
| RSWMIN | | – | 0 |
| RTH0 | Thermal resistance | – | 0.01 |
| SDTERM | | – | 0 |
| SHMOD | Self heating and T node switcher — NOT USED IN XYCE | – | 0 |
| SII0 | Vgs dependent parameter of Iii | $V^{-1}$ | 0.5 |
| SII1 | 1st Vgs dependent parameter of Iii | $V^{-1}$ | 0.1 |
| SII2 | 2nd Vgs dependent parameter of Iii | – | 0 |
| SIID | 3rd Vds dependent parameter of Iii | $V^{-1}$ | 0 |
| SJD | Constant for drain-side two-step second junction | – | 0 |
| SJS | Constant for source-side two-step second junction | – | 0 |
| SJSWD | Constant for drain-side sidewall two-step second junction | – | 0 |
| SJSWGD | Constant for source-side gate sidewall two-step second junction | – | 0 |
| SJSWGS | Constant for source-side gate sidewall two-step second junction | – | 0 |
| SJSWS | Constant for source-side sidewall two-step second junction | – | 0 |
| TBGASUB | Bandgap Temperature Coefficient (eV / degrees) | – | 0.000702 |
| TBGBSUB | Bandgap Temperature Coefficient (degrees) | – | 1108 |
| TCJ | Temperature coefficient for CJS/CJD | – | 0 |
| TCJSW | Temperature coefficient for CJSWS/CJSWD | – | 0 |
| TCJSWG | Temperature coefficient for CJSWGS/CJSWGD | – | 0 |
| TETA0 | Temperature dependence of DIBL coefficient, 1/K | – | 0 |
| TETA0R | Temperature dependence of Reverse-mode DIBL coefficient, 1/K | – | 0 |
| TFIN | Body (Fin) thickness | – | 1.5e-08 |
| TGATE | Gate height on top of the hard mask | – | 3e-08 |
| TGIDL | GIDL/GISL Temperature Dependence | – | -0.003 |
| TII | Impact Ionization Temperature Dependence, IIMOD=2 | – | 0 |
| TMASK | Height of hard mask on top of the fin | – | 3e-08 |

Table 2.93: BSIM-CMG FINFET v107.0.0 Device Model Parameters

| Parameter | Description | Units | Default |
|---|---|---|---|
| TMEXP | | – | 0 |
| TMEXPR | | – | 0 |
| TNJTS | Temperature coefficient for NJTS | – | 0 |
| TNJTSD | Temperature coefficient for NJTSD | – | 0 |
| TNJTSSW | Temperature coefficient for NJTSSW | – | 0 |
| TNJTSSWD | NTemperature coefficient for NJTSSWD | – | 0 |
| TNJTSSWG | Temperature coefficient for NJTSSWG | – | 0 |
| TNJTSSWGD | Temperature coefficient for NJTSSWGD | – | 0 |
| TNOM | Temperature at which the model is extracted (degrees) | – | 27 |
| TOXG | oxide thickness for gate current model in meters, Introduced in BSIM-CMG106.1.0 | m | 0 |
| TOXP | physical oxide thickness in meters | – | 1.2e-09 |
| TOXREF | Target tox value [m] | – | 1.2e-09 |
| TPB | Temperature coefficient for PBS/PBD | – | 0 |
| TPBSW | Temperature coefficient for PBSWS/PBSWD | – | 0 |
| TPBSWG | Temperature coefficient for PBSWGS/PBSWGD | – | 0 |
| TRDDR | | – | 0 |
| TRSDR | | – | 0 |
| TSILI | Thickness of the silicide on top of the raised source/drain | – | 1e-08 |
| TSS | SSwing Temperature Coefficient (/ degrees) | – | 0 |
| U0 | | – | 0.03 |
| U0MULT | Variability in carrier mobility | – | 1 |
| U0N1 | NFIN dependence of U0 | – | 0 |
| U0N2 | NFIN dependence of U0 | – | 100000 |
| UA | | – | 0.3 |
| UA1 | | – | 0.001032 |
| UC | Body effect for mobility degradation parameter - BULKMOD=1 | – | 0 |
| UC1 | | – | 5.6e-11 |
| UCS | | – | 1 |
| UCSTE | | – | -0.004775 |
| UD | | – | 0 |
| UD1 | | – | 0 |

Table 2.93: BSIM-CMG FINFET v107.0.0 Device Model Parameters

| Parameter | Description | Units | Default |
|---|---|---|---|
| UP | | – | 0 |
| UTE | | – | 0 |
| UTL | | – | -0.0015 |
| VSAT | | – | 85000 |
| VSAT1 | Velocity Saturation parameter for I_on degradation - forward mode | – | 0 |
| VSAT1N1 | NFIN dependence of VSAT1 | – | 0 |
| VSAT1N2 | NFIN dependence of VSAT1 | – | 0 |
| VSAT1R | Velocity Saturation parameter for I_on degradation - reverse mode | – | 0 |
| VSAT1RN1 | NFIN dependence of VSAT1R | – | 0 |
| VSAT1RN2 | NFIN dependence of VSAT1R | – | 0 |
| VSATCV | Velocity Saturation parameter for CV | – | 0 |
| VSATN1 | NFIN dependence of VSAT | – | 0 |
| VSATN2 | NFIN dependence of VSAT | – | 100000 |
| VTSD | Bottom drain junction trap-assisted current voltage dependent parameter | – | 0 |
| VTSS | Bottom source junction trap-assisted current voltage dependent parameter | – | 10 |
| VTSSWD | Unit length trap-assisted current voltage dependent parameter for sidewall drain junction | – | 0 |
| VTSSWGD | Unit length trap-assisted current voltage dependent parameter for gate-edge sidewall drain junction | – | 0 |
| VTSSWGS | Unit length trap-assisted current voltage dependent parameter for gate-edge sidewall source junction | – | 10 |
| VTSSWS | Unit length trap-assisted current voltage dependent parameter for sidewall source junction | – | 10 |
| WR | | – | 1 |
| WTH0 | Width dependence coefficient for Rth and Cth | – | 0 |
| XJBVD | Fitting parameter for drain diode breakdown current | – | 0 |
| XJBVS | Fitting parameter for source diode breakdown current | – | 1 |
| XL | L offset for channel length due to mask/etch effect | – | 0 |
| XRCRG1 | | – | 12 |

Table 2.93: BSIM-CMG FINFET v107.0.0 Device Model Parameters

| Parameter | Description | Units | Default |
|---|---|---|---|
| XRCRG2 | | – | 1 |
| XTID | Drain junction current temperature exponent | – | 0 |
| XTIS | Source junction current temperature exponent | – | 3 |
| XTSD | Power dependence of JTSD on temperature | – | 0 |
| XTSS | Power dependence of JTSS on temperature | – | 0.02 |
| XTSSWD | Power dependence of JTSSWD on temperature | – | 0 |
| XTSSWGD | Power dependence of JTSSWGD on temperature | – | 0 |
| XTSSWGS | Power dependence of JTSSWGS on temperature | – | 0.02 |
| XTSSWS | Power dependence of JTSSWS on temperature | – | 0.02 |

## Levels 2000 and 2001 MOSFET Tables (MVS version 2.0.0)

**Xyce** includes the MIT Virtual Source (MVS) MOSFET model version 2.0.0 in both ETSOI and HEMT variants. The code in **Xyce** was generated from the MIT Verilog-A input. Model parameters for the MVS model are given in 2.94 and 2.95. The MVS model does not have instance parameters. Details of the model are documented MVS Nanotransistor Model 2.0.0 manual, available from the NEEDS web site at `https://nanohub.org/publications/74/1`.

**NOTE:** Unlike all other MOSFET models in Xyce, the MVS model takes only 3 nodes, the drain, gate and source. It takes no substrate node.

Table 2.94: MVS ETSOI 2.0.0 Device Model Parameters

| Parameter | Description | Units | Default |
|---|---|---|---|
| B | | – | 6.8e-09 |
| BETA | | – | 1.55 |
| CINS | | – | 0.0317 |
| DELTA | | – | 0.12 |
| DLG | | – | 1.05e-08 |
| DQM0 | | – | 4.6e-09 |
| ENERGY_DIFF_VOLT | | – | 0.153 |
| EPS | | – | 13.6 |
| KSEE | | – | 0.1 |
| LGDR | | – | 8e-08 |
| ML | | – | 0.89 |
| MT | | – | 0.19 |
| MU_EFF | | – | 1 |
| N0 | | – | 1.35 |
| ND | | – | 0 |
| NU | | – | 0.7 |
| RS0 | | – | 0.00016 |
| THETA | | – | 2.5 |
| TJUN | | – | 300 |
| TYPE | | – | 1 |
| VERSION | | – | 2 |
| W | | – | 1e-06 |

Table 2.95: MVS HEMT 2.0.0 Device Model Parameters

| Parameter | Description | Units | Default |
|---|---|---|---|
| B | | – | 6.8e-09 |

Table 2.95: MVS HEMT 2.0.0 Device Model Parameters

| Parameter | Description | Units | Default |
|---|---|---|---|
| BETA | | – | 1.55 |
| CINS | | – | 0.0317 |
| DELTA | | – | 0.12 |
| DLG | | – | 1.05e-08 |
| DQM0 | | – | 4.6e-09 |
| ENERGY_DIFF_VOLT | | – | 0.153 |
| EPS | | – | 13.6 |
| KSEE | | – | 0.1 |
| LGDR | | – | 8e-08 |
| MEFF | | – | 0.041 |
| MU_EFF | | – | 1 |
| N0 | | – | 1.35 |
| NACC | | – | 2.25e+16 |
| ND | | – | 0 |
| NP_MASS | | – | 9 |
| RC0 | | – | 0.00016 |
| THETA | | – | 2.5 |
| TJUN | | – | 300 |
| TYPE | | – | 1 |
| VERSION | | – | 2 |
| W | | – | 1e-06 |

## Level 301 MOSFET Tables (EKV version 3.0.1)

**Xyce** includes the EKV MOSFET model, version 3.0.1 [15][27][28], the EKV3 model. Full documentation for the EKV3 model is available on the **Xyce** internal web site; the documentation for the EKV3 model available there may be freely redistributed. Instance and model parameters for the EKV model are given in tables 2.96 and 2.97.

The EKV3 model is developed by the EKV Team of the Electronics Laboratory-TUC (Technical University of Crete). It is included in **Xyce** under license from Technical University of Crete. The official web site of the EKV model is `http://ekv.epfl.ch/`.

**Due to licensing restrictions, the EKV3 mosfet is not available in open-source versions of Xyce. The license for EKV3 authorizes Sandia National Laboratories only to distribute binary versions of code with EKV3 included.**

Table 2.96: EKV3 MOSFET Device Instance Parameters

| Parameter | Description | Units | Default |
|---|---|---|---|
| AD | DRAIN'S AREA | – | 0 |
| AS | SOURCE'S AREA | – | 0 |
| L | GATE'S LENGTH | – | 1e-05 |
| M | NUMBER OF DEVICES IN PARALLEL | – | 1 |
| NF | NUMBER OF FINGERS | – | 1 |
| PD | DRAIN'S PERIMETER | – | 0 |
| PS | SOURCE'S PERIMETER | – | 0 |
| SA | STI PARAMETER; DISTANCE FROM STI | – | 0 |
| SB | STI PARAMETER; DISTANCE FROM STI | – | 0 |
| SD | STI PARAMETER; DISTANCE BETWEEN GATES | – | 0 |
| W | GATE'S WIDTH | – | 1e-05 |

Table 2.97: EKV3 MOSFET Device Model Parameters

| Parameter | Description | Units | Default |
|---|---|---|---|
| ACLM | | – | 0.83 |
| AF | | – | 1 |
| AGAM | | – | 0 |
| AGAMMA | MATCHING PARAMETER FOR BODY FACTOR (GAMMA) | – | 0 |
| AGIDL | | – | 0 |
| AKP | MATCHING PARAMETER FOR MOBILITY (KP) | – | 0 |
| AQMA | | – | 0.5 |
| AQMI | | – | 0.4 |

Table 2.97: EKV3 MOSFET Device Model Parameters

| Parameter | Description | Units | Default |
|---|---|---|---|
| AVT | | – | 0 |
| AVTO | MATCHING PARAMETER FOR THRESHOLD VOLTAGE (VTO) | – | 0 |
| BEX | | – | -1.5 |
| BGIDL | | – | 2.3e+09 |
| BVD | | – | 10 |
| BVS | | – | 10 |
| CGBO | | – | 0 |
| CGDO | | – | 0 |
| CGIDL | | – | 0.5 |
| CGSO | | – | 0 |
| CJD | | – | 0 |
| CJF | | – | 0 |
| CJS | | – | 0 |
| CJSWD | | – | 0 |
| CJSWGD | | – | 0 |
| CJSWGS | | – | 0 |
| CJSWS | | – | 0 |
| COX | | – | 0.012 |
| DDITS | | – | 0.3 |
| DELTA | | – | 2 |
| DFR | | – | 0.001 |
| DGAMMAEDGE | | – | 0 |
| DL | | – | -1e-08 |
| DLC | | – | 0 |
| DPHIEDGE | | – | 0 |
| DW | | – | -1e-08 |
| DWC | | – | 0 |
| E0 | | – | 1e+10 |
| E1 | | – | 3.1e+08 |
| EB | | – | 2.9e+10 |
| EF | | – | 2 |
| EGIDL | | – | 0.8 |
| ETA | | – | 0.5 |
| ETAD | | – | 1 |

Table 2.97: EKV3 MOSFET Device Model Parameters

| Parameter | Description | Units | Default |
|---|---|---|---|
| ETAQM | | – | 0.75 |
| FLR | | – | 0 |
| FPROUT | | – | 1e+06 |
| GAMMA | | – | 0.3 |
| GAMMAG | | – | 4.1 |
| GAMMAGOV | | – | 10 |
| GAMMAOV | | – | 1.6 |
| GC | | – | 1 |
| GMIN | | – | 0 |
| HDIF | | – | 0 |
| IBA | | – | 0 |
| IBB | | – | 3e+08 |
| IBBT | | – | 0.0008 |
| IBN | | – | 1 |
| INFO_LEVEL | | – | 0 |
| JSD | | – | 0 |
| JSS | | – | 0 |
| JSSWD | | – | 0 |
| JSSWGD | | – | 0 |
| JSSWGS | | – | 0 |
| JSSWS | | – | 0 |
| JTSD | | – | 0 |
| JTSS | | – | 0 |
| JTSSWD | | – | 0 |
| JTSSWGD | | – | 0 |
| JTSSWGS | | – | 0 |
| JTSSWS | | – | 0 |
| KA | | – | 0 |
| KB | | – | 0 |
| KETAD | | – | 0 |
| KF | | – | 0 |
| KG | | – | 0 |
| KGAMMA | | – | 0 |
| KGFN | | – | 0 |
| KJF | | – | 0 |

Table 2.97: EKV3 MOSFET Device Model Parameters

| Parameter | Description | Units | Default |
|---|---|---|---|
| KKP | | – | 0 |
| KP | | – | 0.0005 |
| KRGL1 | | – | 0 |
| KUCRIT | | – | 0 |
| KVTO | | – | 0 |
| LA | | – | 1 |
| LAMBDA | | – | 0.5 |
| LB | | – | 1 |
| LDIF | | – | 0 |
| LDPHIEDGE | | – | 0 |
| LDW | | – | 0 |
| LETA | | – | 0.5 |
| LETA0 | | – | 0 |
| LETA2 | | – | 0 |
| LGAM | | – | 1 |
| LKKP | | – | 0 |
| LKVTO | | – | 0 |
| LL | | – | 0 |
| LLN | | – | 1 |
| LLODKKP | | – | 1 |
| LLODKVTO | | – | 1 |
| LNWR | | – | 0 |
| LODKETAD | | – | 1 |
| LODKGAMMA | | – | 1 |
| LOV | | – | 2e-08 |
| LOVIG | | – | 2e-08 |
| LQWR | | – | 0 |
| LR | | – | 5e-08 |
| LVT | | – | 1 |
| LWR | | – | 0 |
| MJD | | – | 0.9 |
| MJS | | – | 0.9 |
| MJSWD | | – | 0.7 |
| MJSWGD | | – | 0.7 |
| MJSWGS | | – | 0.7 |

Table 2.97: EKV3 MOSFET Device Model Parameters

| Parameter | Description | Units | Default |
|---|---|---|---|
| MJSWS | | – | 0.7 |
| NO | | – | 1 |
| NCS | | – | 1 |
| NFVTA | | – | 0 |
| NFVTB | | – | 10000 |
| NJD | | – | 1 |
| NJS | | – | 1 |
| NJTSD | | – | 1 |
| NJTSS | | – | 1 |
| NJTSSWD | | – | 1 |
| NJTSSWGD | | – | 1 |
| NJTSSWGS | | – | 1 |
| NJTSSWS | | – | 1 |
| NLR | | – | 0.01 |
| NQS_NOI | | – | 1 |
| NWR | | – | 0.005 |
| PBD | | – | 0.8 |
| PBS | | – | 0.8 |
| PBSWD | | – | 0.6 |
| PBSWGD | | – | 0.6 |
| PBSWGS | | – | 0.6 |
| PBSWS | | – | 0.6 |
| PDITS | | – | 0 |
| PDITSD | | – | 1 |
| PDITSL | | – | 0 |
| PHIF | FERMI BULK POTENTIAL | – | 0.45 |
| PKKP | | – | 0 |
| PKVTO | | – | 0 |
| QLR | | – | 0.0005 |
| QOFF | | – | 0 |
| QWR | | – | 0.0003 |
| RBN | | – | 0 |
| RBWSH | | – | 0.003 |
| RD | | – | 0 |
| RDBN | | – | 0 |

Table 2.97: EKV3 MOSFET Device Model Parameters

| Parameter | Description | Units | Default |
|---|---|---|---|
| RDBWSH | | – | 0.001 |
| RDSBSH | | – | 1000 |
| RDX | | – | -1 |
| RGSH | | – | 3 |
| RINGTYPE | | – | 1 |
| RLX | EXTERNAL SERIES RESISTANCE | – | -1 |
| RS | | – | 0 |
| RSBN | | – | 0 |
| RSBWSH | | – | 0.001 |
| RSH | | – | 0 |
| RSX | | – | -1 |
| SAREF | | – | 0 |
| SBREF | | – | 0 |
| SCALE | | – | 1 |
| SIGMAD | | – | 1 |
| SIGN | SIGN = 1 FOR NMOS; SIGN = -1 FOR PMOS | – | 1 |
| TCJ | | – | 0 |
| TCJSW | | – | 0 |
| TCJSWG | | – | 0 |
| TCV | | – | 0.0006 |
| TCVL | | – | 0 |
| TCVW | | – | 0 |
| TCVWL | | – | 0 |
| TE0EX | | – | 0.5 |
| TE1EX | | – | 0.5 |
| TETA | | – | -0.0009 |
| TG | TYPE OF GATE: -1 ENHANCEMENT TYPE; 1 DEPLETION TYPE | – | -1 |
| TH_NOI | | – | 0 |
| THC | | – | 0 |
| TKKP | | – | 0 |
| TLAMBDA | | – | 0 |
| TNJTSD | | – | 0 |
| TNJTSS | | – | 0 |
| TNJTSSWD | | – | 0 |

Table 2.97: EKV3 MOSFET Device Model Parameters

| Parameter | Description | Units | Default |
|---|---|---|---|
| TNJTSSWGD | | – | 0 |
| TNJTSSWGS | | – | 0 |
| TNJTSSWS | | – | 0 |
| TNOM | | – | 27 |
| TPB | | – | 0 |
| TPBSW | | – | 0 |
| TPBSWG | | – | 0 |
| TR | | – | 0 |
| TR2 | | – | 0 |
| UCEX | | – | 1.5 |
| UCRIT | | – | 5e+06 |
| VBI | | – | 0 |
| VFBOV | | – | 0 |
| VFR | | – | 0 |
| VOV | | – | 1 |
| VTO | THRESHOLD VOLTAGE | – | 0.3 |
| VTSD | | – | 0 |
| VTSS | | – | 0 |
| VTSSWD | | – | 0 |
| VTSSWGD | | – | 0 |
| VTSSWGS | | – | 0 |
| VTSSWS | | – | 0 |
| WDL | | – | 0 |
| WDPHIEDGE | | – | 0 |
| WE0 | | – | 0 |
| WE1 | | – | 0 |
| WEDGE | | – | 0 |
| WETA | | – | 0.2 |
| WETAD | | – | 0 |
| WGAM | | – | 1 |
| WKKP | | – | 0 |
| WKP1 | | – | 1e-06 |
| WKP2 | | – | 0 |
| WKP3 | | – | 1 |
| WKVTO | | – | 0 |

Table 2.97: EKV3 MOSFET Device Model Parameters

| Parameter | Description | Units | Default |
|---|---|---|---|
| WLAMBDA | | – | 0 |
| WLDGAMMAEDGE | | – | 0 |
| WLDPHIEDGE | | – | 0 |
| WLOD | | – | 0 |
| WLODKKP | | – | 1 |
| WLODKVTO | | – | 1 |
| WLR | | – | 0 |
| WNLR | | – | 0 |
| WQLR | | – | 0 |
| WR | | – | 9e-08 |
| WRLX | | – | 0 |
| WUCEX | | – | 0 |
| WUCRIT | | – | 0 |
| WVT | | – | 1 |
| XB | | – | 3.1 |
| XJ | | – | 2e-08 |
| XJBVD | | – | 0 |
| XJBVS | | – | 0 |
| XL | | – | 0 |
| XTID | | – | 3 |
| XTIS | | – | 3 |
| XTSD | | – | 0 |
| XTSS | | – | 0 |
| XTSSWD | | – | 0 |
| XTSSWGD | | – | 0 |
| XTSSWGS | | – | 0 |
| XTSSWS | | – | 0 |
| XW | | – | 0 |
| ZC | | – | 1e-06 |

## 2.3.20 Lossy Transmission Line (LTRA)

**Symbol**

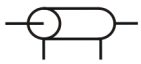

**Instance Form**

```
O<name> <A port (+) node> <A port (-) node>
+ <B port (+) node> <B port (-) node> [model name]
```

**Model Form**

```
.MODEL <model name> LTRA R=<value> L=<value> C=<value>
+ G=<value> LEN=<value> [model parameters]
```

**Examples**

```
Oline1 inp inn outp outn cable1
Oline2 inp inn outp outn cable1
```

**Comments**

The lossy transmission line, or LTRA, device is a two port (`A` and `B`), bi-directional device. The `(+)` and `(-)` nodes define the polarity of a positive voltage at a port.

`R`, `L`, `C`, and `G` are the resistance, inductance, capacitance, and conductance of the transmission line per unit length, respectively. `LEN` is the total length of the transmission line. Supported configurations for the LTRA are `RLC`, `RC`, `LC` (lossless) and `RG`.

### Model Parameters

Table 2.98: Lossy Transmission Line Device Model Parameters

| Parameter | Description | Units | Default |
|---|---|---|---|
| ABS | Abs. rate of change of deriv. for bkpt | – | 1 |
| C | Capacitance per unit length | F/m | 0 |
| COMPACTABS | special abstol for straight line checking | – | 1e-12 |
| COMPACTREL | special reltol for straight line checking | – | 0.001 |
| COMPLEXSTEPCONTROL | do complex time step control using local truncation error estimation | logical (T/F) | false |
| G | Conductance per unit length | $\Omega^{-1}$ $m^{-1}$ | 0 |
| L | Inductance per unit length | $Hm^{-1}$ | 0 |
| LEN | length of line | m | 0 |
| LININTERP | use linear interpolation | logical (T/F) | false |
| MIXEDINTERP | use linear interpolation if quadratic results look unacceptable | logical (T/F) | false |

Table 2.98: Lossy Transmission Line Device Model Parameters

| Parameter | Description | Units | Default |
|---|---|---|---|
| NOSTEPLIMIT | don't limit timestep size based on the time constant of the line | logical (T/F) | false |
| QUADINTERP | use quadratic interpolation | logical (T/F) | true |
| R | Resistance per unit length | $\Omega/m$ | 0 |
| REL | Rel. rate of change of deriv. for bkpt | – | 1 |
| STEPLIMIT | limit timestep size based on the time constant of the line | logical (T/F) | true |
| TRUNCDONTCUT | don't limit timestep to keep impulse response calculation errors low | logical (T/F) | false |
| TRUNCNR | use N-R iterations for step calculation in LTRAtrunc | logical (T/F) | false |

By default time step limiting is on in the LTRA. This means that simulation step sizes will be reduced if required by the LTRA to preserve accuracy. This can be disabled by setting NOSTEPLIMIT=1 and TRUNCDONTCUT=1 on the .MODEL line.

The option most worth experimenting with for increasing the speed of simulation is REL. The default value of 1 is usually safe from the point of view of accuracy but occasionally increases computation time. A value greater than 2 eliminates all breakpoints and may be worth trying depending on the nature of the rest of the circuit, keeping in mind that it might not be safe from the viewpoint of accuracy. Breakpoints may be entirely eliminated if the circuit does not exhibit any sharp discontinuities. Values between 0 and 1 are usually not required but may be used for setting many breakpoints.

COMPACTREL and COMPACTABS are tolerances that control when the device should attempt to compact past history. This can significantly speed up the simulation, and reduce memory usage, but can negatively impact accuracy and in some cases may cause problems with the nonlinear solver. In general this capability should be used with linear type signals, such as square-wave-like voltages. In order to activate this capability the general device option TRYTOCOMPACT=1 must be set, if it is not no history compaction will be performed and the COMPACT options will be ignored.

Example:

```
.OPTIONS DEVICE TRYTOCOMPACT=1
```

## References

See references [29] and [30] for more information about the model.

## 2.3.21 Voltage- or Current-controlled Switch

**Instance Form**

```
S<name> <(+) switch node> <(-) switch node>
+ <(+) control node> <(-) control node>
+ <model name> [ON] [OFF]

W<name> <(+) switch node> <(-) switch node>
+ <control node voltage source>
+ <model name> [ON] [OFF]
```

**Model Form**

```
.MODEL <model name> VSWITCH [model parameters]
.MODEL <model name> ISWITCH [model parameters]
```

**Examples**

```
S1 21 23 12 10 SMOD1
SSET 15 10 1 13 SRELAY
W1 1 2 VCLOCK SWITCHMOD1
W2 3 0 VRAMP SM1 ON
```

**Comments**

The voltage- or current-controlled switch is a particular type of controlled resistor. This model is designed to help reduce numerical issues. See Special considerations below.

The resistance between the `<(+) switch node>` and the `<(-) switch node>` is dependent on either the voltage between the `<(+) control node>` and the `<(-) control node>` or the current through the control node voltage source. The resistance changes in a continuous manner between the `RON` and `ROFF` model parameters.

No resistance is inserted between the control nodes. It is up to the user to make sure that these nodes are not floating.

Even though evaluating the switch model is computationally inexpensive, for transient analysis **Xyce** steps through the transition section using small time-steps in order to calculate the waveform accurately. Thus, a circuit with many switch transitions can result in lengthy run times.

The ON and OFF parameters are used to specify the initial state of the switch at the first step of the operating point calculation; this does not force the switch to be in that state, it only gives the operating point solver an initial state to work with. If it is known that the switch should be in a particular state in the operating point it could help convergence to specify one of these keywords.

The power dissipated in the switch is calculated with $I \cdot \Delta V$ where the voltage drop is calculated as $(V_+ - V_-)$ and positive current flows from $V_+$ to $V_-$. This will essentially be the power dissipated in either `RON` or `ROFF`, since the switch is a particular type of controlled resistor.

## Model Parameters

Table 2.99: Controlled Switch Device Model Parameters

| Parameter | Description | Units | Default |
|---|---|---|---|
| IOFF | Off current | A | 0 |
| ION | On current | A | 0.001 |
| OFF | Off control value | – | 0 |
| ON | On control value | – | 1 |
| ROFF | Off resistance | Ω | 1e+06 |
| RON | On resistance | Ω | 1 |
| VOFF | Off voltage | V | 0 |
| VON | On voltage | V | 1 |

## Special Considerations

- Due to numerical limitations, **Xyce** can only manage a dynamic range of approximately 12 decades. Thus, it is recommended the user limit the ratio $\mathbf{ROFF}/\mathbf{RON}$ to less than $10^{12}$. This soft limitation is not enforced by the code, and larger ratios might converge for some problems.

- Do not set $\mathbf{RON}$ to 0.0, as the code computes the "on" conductance as the inverse of $\mathbf{RON}$. Using 0.0 will cause the simulation to fail when this invalid division results in an infinite conductance. Use a very small, but non-zero, on resistance instead.

- Furthermore, it is a good idea to limit the narrowness of the transition region. This is because in the transition region, the switch has gain and the narrower the region, the higher the gain and the more potential for numerical problems. The smallest value recommended for $\|\mathbf{VON} - \mathbf{VOFF}\|$ or $\|\mathbf{ION} - \mathbf{IOFF}\|$ is $1 \times 10^{-12}$. This recommendation is not a restriction, and you might find for some problems that narrower transition regions might work well.

## Controlled switch equations

The equations in this section use the following variables:

$$
\begin{aligned}
R_s &= \text{switch resistance} \\
V_c &= \text{voltage across control nodes} \\
I_c &= \text{current through control node voltage source} \\
L_m &= \text{log-mean of resistor values} &&= \ln\left(\sqrt{\mathbf{RON} \cdot \mathbf{ROFF}}\right) \\
L_r &= \text{log - ratio of resistor values} &&= \ln\left(\mathbf{RON}/\mathbf{ROFF}\right) \\
V_d &= \text{difference of control voltages} &&= \mathbf{VON} - \mathbf{VOFF} \\
I_d &= \text{difference of control currents} &&= \mathbf{ION} - \mathbf{IOFF}
\end{aligned}
$$

Switch Resistance

To compute the switch resistance, **Xyce** first calculates the "switch state" $S$ as $S = (V_c - \mathbf{VOFF})/V_d$ or $S = (I_c - \mathbf{IOFF})/I_d$. The switch resistance is then:

$$R_s = \begin{cases} \mathbf{RON}, & S \geq 1.0 \\ \mathbf{ROFF}, & S \leq 0.0 \\ \exp\left(L_m + 0.75L_r(2S-1) - 0.25L_r(2S-1)^3\right), & 0 < S < 1 \end{cases}$$

## 2.3.22 Generic Switch

**Instance Form**

```
SW<name> <(+) switch node> <(-) switch node> <model name> [ON] [OFF]
<control =  expression >
```

**Model Form**

```
.MODEL <model name> VSWITCH [model parameters]
.MODEL <model name> ISWITCH [model parameters]
.MODEL <model name> SWITCH [model parameters]
```

**Examples**

```
SW 1 2 SWI OFF CONTROL={I(VMON)}
SW 1 2 SWV OFF CONTROL={V(3)-V(4)}
SW 1 2 SW OFF CONTROL={if(time>0.001,1,0)}
```

**Comments**

The generic switch is similar to the voltage- or current-controlled switch except that the control variable is anything that can be writen as an expression. The examples show how a voltage- or current-controlled switch can be implemented with the generic switch. Also shown is a relay that turns on when a certain time is reached. Model parameters are given in Table 2.99.

The power dissipated in the generic switch is calculated with $I \cdot \Delta V$ where the voltage drop is calculated as $(V_+ - V_-)$ and positive current flows from $V_+$ to $V_-$. This will essentially be the power dissipated in either `RON` or `ROFF`, since the generic switch is a particular type of controlled resistor.

## 2.3.23 Lossless (Ideal) Transmission Line

**Symbol**

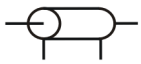

**Instance Form**

```
T<name> <port 1 (+) node> <port 1 (-) node>
+ <port 2 (+) node> <port 2 (-) node>
+ Z0=<value> [TD=<value>] [F=<value> [NL=<value>]]
```

**Examples**

```
Tline inp inn outp outn Z0=50 TD=1us
Tline2 inp inn outp outn Z0=50 F=1meg NL=1.0
```

**Comments**

The lossless transmission line device is a two port (`A` and `B`), bi-directional delay line. The `(+)` and `(-)` nodes define the polarity of a positive voltage at a port.

`Z0` is the characteristic impedance. For user convenience, `ZO` ("Zee Oh") is an allowed synonym for `Z0` ("Zee Zero").

The transmission line's length is specified by either `TD` (a delay in seconds) or by the combination of `F` and `NL` (a frequency in Hz and the relative wavelength at `F`). `NL` defaults to 0.25 (`F` is the quarter-wave frequency). If `F` is given, the time delay is computed as $\frac{NL}{F}$.

While both `TD` and `F` are optional, at least one of them must be given. It is an instance line error if both are given.

Lead currents for the two terminals (1 and 2) of the lossless transmission device (e.g.,for the T device `line2`) are accessed via `I1(Tline2)` and `I2(Tline2)`. The polarity conventions are that positive current flows into the positive node of the specified terminal, and negative current flows out of the positive node of the specified terminal.

Power for the lossless transmission line is calculated as $I_1 \cdot \Delta V_1 + I_2 \cdot \Delta V_2$, where the voltage drops ($\Delta V_1$ and $\Delta V_2$) are the voltage drops between the positive and negative terminals of each port (e.g., $\Delta V = (V_+ - V_-)$). The sign conventions for the lead currents $I_1$ and $I_2$ were given in the previous paragraph. This definition can be viewed as the instantaneous sum of the power flowing into terminal 1 and the power flowing into terminal 2. This definition for power for the lossless transmission line may differ from commercial simulators, such as HSpice.

### Instance Parameters

Table 2.100: Ideal Transmission Line Device Instance Parameters

| Parameter | Description | Units | Default |
|---|---|---|---|
| `F` | Frequency | Hz | 0 |

Table 2.100: Ideal Transmission Line Device Instance Parameters

| Parameter | Description | Units | Default |
|---|---|---|---|
| NL | Length in wavelengths | – | 0.25 |
| TD | Time delay | s | 0 |
| Z0 | Characteristic Impedance | Ω | 0 |
| ZO | Characteristic Impedance | Ω | 0 |

## 2.3.24 Lumped Transmission Line

**Symbol**

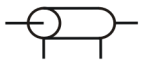

**Instance Form**

```
ytransline <name> <Input port> <Output port> testLine
+ len=<value> lumps=<value>
```

**Model Form**

```
.model testLine transline r=<value> l=<value>
+ c=<value> [model parameters]
```

**Examples**

```
ytransline line1 inn out  testLine len=12.0 lumps=1440
```

**Comments**

The lumped transmission line, device is a two port bi-directional device. The specification is patterned, loosely, from the netlist specification for the LTRA device.

`R`, `L`, and `C` are the resistance, inductance, and capacitance of the transmission line per unit length, respectively. `LEN` is the total length of the transmission line, and `LUMPS` is the number of lumped elements used to discretize the line. Supported configurations for this device are `RLC` and `LC`.

Unlike the LTRA device, which is based on an analytic solution, this device is based on assembling chains of linear R,L and C devices to approximate the solution to the Telegraph equations. It is the functional equivalent of building a transmission line in the netlist using subcircuits of linear elements. The advantage of using this approach is that it automates the mechanics of this process, and thus is less prone to error. It can be used with all analysis types, including harmonic balance (HB).

The model is based on the assumption that the segments of the line are evenly spaced. The number of segments is specified by the parameter `LUMPS` and the larger this number, the more accurate the calculation.

### Device Parameters

Table 2.101: Lumped Transmission Line Device Instance Parameters

| Parameter | Description | Units | Default |
|---|---|---|---|
| `LEN` | length of line | m | 0 |
| `LUMPS` | | – | 1 |

### Model Parameters

Table 2.102: Lumped Transmission Line Device Model Parameters

| Parameter | Description | Units | Default |
|---|---|---|---|
| C | Capacitance per unit length | F/m | 0 |
| ELEV | | – | 2 |
| G | Conductance per unit length | $\Omega^{-1}$ $m^{-1}$ | 0 |
| L | Inductance per unit length | $Hm^{-1}$ | 0 |
| R | Resistance per unit length | $\Omega/m$ | 0 |

## 2.3.25 Behavioral Digital Devices

**Instance Form**

```
U<name> <type>(<num inputs>) [digital power node]
+ [digital ground node] <input node>* <output node>*
+ <model name> [device parameters]
```

**Model Form**

```
.MODEL <model name> DIG [model parameters]
```

**Examples**

```
UMYAND AND(2) DPWR DGND in1 in2 out DMOD IC=TRUE
UTHEINV INV DPWR DGND in out DMOD
.model DMOD DIG (
+ CLO=1e-12  CHI=1e-12
+ S0RLO=5  S0RHI=5  S0TSW=5e-9
+ S0VLO=-1  S0VHI=1.8
+ S1RLO=200  S1RHI=5  S1TSW=5e-9
+ S1VLO=1  S1VHI=3
+ RLOAD=1000
+ CLOAD=1e-12
+ DELAY=20ns )
```

**Parameters and Options**

`type`

Type of digital device. Supported devices are: INV, BUF, AND, NAND, OR, NOR, XOR, NXOR, DFF, JKFF, TFF, DLTCH and ADD. (Note: NOT is an allowed synonym for INV, but will be deprecated in future **Xyce** releases.)

The following gates have a fixed number of inputs. INV and BUF have only one input and one output node. XOR and NXOR have two inputs and one output. ADD has three inputs (in1, in2, carryIn) and two outputs (sumOut and carryOut). DFF has four inputs (PREB, CLRB, Clock and Data) and two outputs ($Q$ and $\bar{Q}$). TFF has two inputs (T and CLK) and two outputs ($Q$ and $\bar{Q}$). The TFF uses "positive" ("rising") edge clocking. The JKFF has five inputs (PREB, CLRB, Clock, J and K) and two outputs ($Q$ and $\bar{Q}$). The JKFF uses "negative" ("falling") edge clocking. DLTCH has four inputs (PREB, CLRB, Enable and Data) and two outputs ($Q$ and $\bar{Q}$).

The AND, NAND, OR and NOR gates have one output but a variable number of inputs. There is no limit on the number of inputs for AND, NAND, OR and NOR gates, but there must be at least two inputs.

`num inputs`

For AND, NAND, OR and NOR gates, with N inputs, the syntax is (N), as shown for the MYAND example given above, where AND(2) is specified. The inclusion of (N) is mandatory for gates with a variable

number of inputs, and both the left and right parentheses must be used to enclose N.

This parameter is optional, and typically omitted, for gates with a fixed number of inputs, such as INV, BUF, XOR, NXOR, DFF, JKFF, TFF, DLTCH and ADD. This is illustrated by the THEINV example given above, where the device type is INV rather than INV(1).

`digital power node`
: Dominant node to be connected to the output node(s) to establish high output state. This node is connected to the output by a resistor and capacitor in parallel, whose values are set by the model. This node must be specified on the instance line.

`digital ground node`
: This node serves two purposes, and must be specified on the instance line. It is the dominant node to be connected to the output node(s) to establish low output state. This node is connected to the output by a resistor and capacitor in parallel, whose values are set by the model. This node is also connected to the input node by a resistor and capacitor in parallel, whose values are set by the model. Determination of the input state is based on the voltage drop between the input node and this node.

`input nodes, output nodes`
: Input and output nodes that connect to the circuit.

`model name`
: Name of the model defined in a .MODEL line.

`device parameters`
: Parameter listed in Table 2.103 may be provided as `<parameter>=<value>` specifications as needed. For devices with more than one output, multiple output initial states may be provided as Boolean values in either a comma separated list (e.g. IC=TRUE,FALSE for a device with two outputs) or individually (e.g. IC1=TRUE IC2=FALSE or IC2=FALSE). Finally, the IC specification must use TRUE and FALSE rather than T and F.

## Device Parameters

Table 2.103: Behavioral Digital Device Instance Parameters

| Parameter | Description | Units | Default |
|---|---|---|---|
| IC1 | Vector of initial values for output(s) | logical (T/F) | false |
| IC2 | | – | false |

## Model Parameters

Table 2.104: Behavioral Digital Device Model Parameters

| Parameter | Description | Units | Default |
|---|---|---|---|
| CHI | Capacitance between output node and high reference | F | 1e-06 |
| CLO | Capacitance between output node and low reference | F | 1e-06 |
| CLOAD | Capacitance between input node and input reference | F | 1e-06 |
| DELAY | Delay time of device | s | 1e-08 |
| RLOAD | Resistance between input node and input reference | Ω | 1000 |
| S0RHI | Low state resitance between output node and high reference | Ω | 100 |
| S0RLO | Low state resistance between output node and low reference | Ω | 100 |
| S0TSW | Switching time transition to low state | s | 1e-08 |
| S0VHI | Maximum voltage to switch to low state | V | 1.7 |
| S0VLO | Minimum voltage to switch to low state | V | -1.5 |
| S1RHI | High state resistance between output node and high reference | Ω | 100 |
| S1RLO | High state resistance between output node and low reference | Ω | 100 |
| S1TSW | Switching time transition to high state | s | 1e-08 |
| S1VHI | Maximum voltage to switch to high state | V | 7 |
| S1VLO | Minimum voltage to switch to high state | V | 0.9 |

## Model Description

The input interface model consists of the input node connected with a resistor and capacitor in parallel to the digital ground node. The values of these are: **RLOAD** and **CLOAD**.

The logical state of any input node is determined by comparing the voltage relative to the reference to the range for the low and high state. The range for the low state is **S0VLO** to **S0VHI**. Similarly, the range for the high state is **S1VLO** to **S1VHI**. The state of an input node will remain fixed as long as its voltage stays within the range for its current state. That input node will transition to the other state only when its state goes outside the voltage range of its current state.

The output interface model is more complex than the input model, but shares the same basic configuration of a resistor and capacitor in parallel to simulate loading. For the output case, there are such parallel RC connections to two nodes, the digital ground node and the digital power node. Both of these nodes must be specified on the instance line.

The capacitance to the high node is specified by **CHI**, and the capacitance to the low node is **CLO**. The resistors in parallel with these capacitors are variable, and have values that depend

on the state. In the low state (S0), the resistance values are: **S0RLO** and **S0RHI**. In the high state (S1) ,the resistance values are: **S1RLO** and **S1RHI**. Transition to the high state occurs exponentially over a time of **S1TSW**, and to the low state **S0TSW**.

The device's delay is given by the model parameter **DELAY**. Any input changes that affect the device's outputs are propagated after this delay.

As a note, the model parameters **VREF**, **VLO** and **VHI** are used by the now deprecated Y-type digital device, but are ignored by the U device. A warning message is emitted if any of these three parameters are used in the model card for a U device.

Another caveat is that closely spaced input transitions to the **Xyce** digital behavioral models may not be accurately reflected in the output states. In particular, input-state changes spaced by more than `DELAY` seconds have independent effects on the output states. However, two input-state changes (S1 and S2) that occur within `DELAY` seconds (e.g., at time=t1 and time=t1+0.5*`DELAY`) have the effect of masking the effects of S1 on the device's output states, and only the effects of S2 are propagated to the device's output states.

## DCOP Calculations for Flip-Flops and Latches

The behavior of the digital devices during the DC Operating Point (DCOP) calculations can be controlled via the `IC1` and `IC2` instance parameters and the `DIGINITSTATE` device option. See 2.1.18 for more details on the syntax for device options. Also, this section applies to the Y-Type Behavioral Digital Devices discussed in 2.3.26.

The `IC1` instance parameter is supported for all gate types. The `IC2` instance parameter is supported for all gate types that have two outputs. These instance parameters allow the outputs of individual gates to be set to known states (either `TRUE (1)` or `FALSE (0)`) during the DCOP calculation, irregardless of their input state(s). There are two caveats. First, the `IC1` and `IC2` settings at a given gate will override the global effects of the `DIGINITSTATE` option, discussed below, at that gate. Second, `IC1` and `IC2` do not support the `X`, or "undetermined", state discussed below.

The `DIGINITSTATE` option only applies to the DLTCH, DFF, JKFF and TFF devices. It was added for improved compatibility with PSpice. It sets the initial state of all flip-flops and latches in the circuit: 0=clear, 1=set, 2=`X`. At present, the use of the `DIGINITSTATE` option during the DCOP is the only place that **Xyce** supports the `X`, or "undetermined", state. The `X` state is modeled in **Xyce** by having the DLTCH, DFF, JKFF and TFF outputs simultaneously "pulled-up" and "pulled-down". That approach typically produces an output level, for the `X` state, that is approximately halfway between the voltage levels for `TRUE` and `FALSE` (e.g., halfway between `V_HI` and `V_LO`). As mentioned above, the `IC1` and `IC2` instance parameters take precedence at a given gate.

**Xyce** also supports a default `DIGINITSTATE`, whose value is 3. For this default value, for the DFF, JKFF, TFF and DLTCH devices, **Xyce** enforces $Q$ and $\bar{Q}$ being different at DCOP, if both `PREB` and `CLRB` are `TRUE` . The behavior of the DFF, JKFF and DLTCH devices at the DCOP for `DIGINITSTATE=3` is shown in Tables 2.105, 2.107 and 2.106. In these three tables, the $X$ state denotes the "Don't Care" condition, where the input state can be 0, 1 or the "undetermined" state. The first row in each truth-table (annotated with $*$) is "unstable", and will change to a state with $Q$ and $\bar{Q}$ being different once both `PREB` and `CLRB` are not both in the `FALSE` state.

The behavior of the TFF device at the DCOP, for the default `DIGINITSTATE` of 3, is simpler, and is not shown as a table. The design decision was to have $Q$ and $\bar{Q}$ be different, with the $Q$ value equal to the state of the $T$ input.

Table 2.105: DFF Truth-Table for DIGINITSTATE=3

| PREB | CLRB | CLOCK | DATA | $Q$ | $\bar{Q}$ (Qbar) |
|---|---|---|---|---|---|
| 0 | 0 | X | X | 1* | 1* |
| 0 | 1 | X | X | 1 | 0 |
| 1 | 0 | X | X | 0 | 1 |
| 1 | 1 | X | 0 | 0 | 1 |
| 1 | 1 | X | 1 | 1 | 0 |

Table 2.106: DLTCH Truth-Table for DIGINITSTATE=3

| PREB | CLRB | ENABLE | DATA | $Q$ | $\bar{Q}$ (Qbar) |
|---|---|---|---|---|---|
| 0 | 0 | X | X | 1* | 1* |
| 0 | 1 | X | X | 1 | 0 |
| 1 | 0 | X | X | 0 | 1 |
| 1 | 1 | X | 0 | 0 | 1 |
| 1 | 1 | X | 1 | 1 | 0 |

Table 2.107: JKFF Truth-Table for DIGINITSTATE=3

| PREB | CLRB | CLOCK | J | K | $Q$ | $\bar{Q}$ (Qbar) |
|---|---|---|---|---|---|---|
| 0 | 0 | X | X | X | 1* | 1* |
| 0 | 1 | X | X | X | 1 | 0 |
| 1 | 0 | X | X | X | 0 | 1 |
| 1 | 1 | X | 0 | X | 0 | 1 |
| 1 | 1 | X | 1 | X | 1 | 0 |

## 2.3.26 Y-Type Behavioral Digital Devices (Deprecated)

**Instance Form**

```
Y<type> <name> [low output node] [high output node]
+ [input reference node] <input node>* <output node>*
+  <model name> [device parameters]
```

**Model Form**

```
.MODEL <model name> DIG [model parameters]
```

**Examples**

```
YAND MYAND in1 in2 out DMOD IC=TRUE
YNOT THENOT in out DMOD
YNOR ANOR2 vlo vhi vref in1 in2 out DDEF
.model DMOD DIG (
+ CLO=1e-12  CHI=1e-12
+ S0RLO=5  S0RHI=5  S0TSW=5e-9
+ S0VLO=-1  S0VHI=1.8
+ S1RLO=200  S1RHI=5  S1TSW=5e-9
+ S1VLO=1  S1VHI=3
+ RLOAD=1000
+ CLOAD=1e-12
+ VREF=0 VLO=0 VHI=3
+ DELAY=20ns )
.MODEL DDEF DIG
```

**Parameters and Options**

`type`

Type of digital device. Supported devices are: NOT, BUF, AND, NAND, OR, NOR, XOR, NXOR, DFF, JKFF, TFF, DLTCH and ADD. (Note: INV is now the preferred synonym for NOT. The NOT device type will be deprecated in future **Xyce** releases.) For Y-type digital devices, all devices have two input nodes and one output node, except for NOT, DFF and ADD. NOT has one input and one output. ADD has three inputs (in1, in2, carryIn) and two outputs (sumOut and carryOut). DFF has four inputs (PREB, CLRB, Clock and Data) and two outputs ($Q$ and $\bar{Q}$). TFF has two inputs (T and Clock) and two outputs ($Q$ and $\bar{Q}$). The TFF uses "positive" ("rising") edge clocking. The JKFF has five inputs (PREB, CLRB, Clock, J and K) and two outputs ($Q$ and $\bar{Q}$). The JKFF uses "negative" ("falling") edge clocking. DLTCH has four inputs (PREB, CLRB, Enable and Data) and two outputs ($Q$ and $\bar{Q}$).

`name`

Name of the device instance. This must be present, and when combined with the `Y<type>`, must be unique in the netlist. In the examples, MYAND, THENOT and ANOR2 have been used as names for the three devices.

`low output node`
: Dominant node to be connected to the output node(s) to establish low output state. This node is connected to the output by a resistor and capacitor in parallel, whose values are set by the model. If specified by the model, this node must be omitted from the instance line and a fixed voltage **VLO** is used instead.

`high output node`
: Dominant node to be connected to the output node(s) to establish high output state. This node is connected to the output by a resistor and capacitor in parallel, whose values are set by the model. If specified by the model, this node must be omitted from the instance line and a fixed voltage **VHI** is used instead.

`input reference node`
: This node is connected to the input node by a resistor and capacitor in parallel, whose values are set by the model. Determination if the input state is based on the voltge drop between the input node and this node. If specified by the model, this node must be omitted from the instance line and a fixed voltage **VREF** is used instead.

`input nodes, output nodes`
: Nodes that connect to the circuit.

`model name`
: Name of the model defined in a .MODEL line.

`device parameters`
: Parameter listed in Table 2.108 may be provided as `<parameter>=<value>` specifications as needed. For devices with more than one output, multiple output initial states may be provided as Boolean values in either a comma separated list (e.g. IC=TRUE,FALSE for a device with two outputs) or individually (e.g. IC1=TRUE IC2=FALSE or IC2=FALSE). Finally, the IC specification must use TRUE and FALSE rather than T and F.

## Device Parameters

Table 2.108: Behavioral Digital Device Instance Parameters

| Parameter | Description | Units | Default |
|---|---|---|---|
| IC1 | Vector of initial values for output(s) | logical (T/F) | false |
| IC2 | | – | false |

## Model Parameters

Table 2.109: Behavioral Digital Device Model Parameters

| Parameter | Description | Units | Default |
|---|---|---|---|
| CHI | Capacitance between output node and high reference | F | 1e-06 |
| CLO | Capacitance between output node and low reference | F | 1e-06 |
| CLOAD | Capacitance between input node and input reference | F | 1e-06 |
| DELAY | Delay time of device | s | 1e-08 |
| RLOAD | Resistance between input node and input reference | Ω | 1000 |
| S0RHI | Low state resitance between output node and high reference | Ω | 100 |
| S0RLO | Low state resistance between output node and low reference | Ω | 100 |
| S0TSW | Switching time transition to low state | s | 1e-08 |
| S0VHI | Maximum voltage to switch to low state | V | 1.7 |
| S0VLO | Minimum voltage to switch to low state | V | -1.5 |
| S1RHI | High state resistance between output node and high reference | Ω | 100 |
| S1RLO | High state resistance between output node and low reference | Ω | 100 |
| S1TSW | Switching time transition to high state | s | 1e-08 |
| S1VHI | Maximum voltage to switch to high state | V | 7 |
| S1VLO | Minimum voltage to switch to high state | V | 0.9 |
| VHI | Internal high state supply voltage | V | 0 |
| VLO | Internal low state supply voltage | V | 0 |
| VREF | Internal reference voltage for inputs | V | 0 |

## Model Description

The input interface model consists of the input node connected with a resistor and capacitor in parallel to the digital ground node. The values of these are: **RLOAD** and **CLOAD**.

The logical state of any input node is determined by comparing the voltage relative to the reference to the range for the low and high state. The range for the low state is **S0VLO** to **S0VHI**. Similarly, the range for the high state is **S1VLO** to **S1VHI**. The state of an input node will remain fixed as long as its voltage stays within the voltage range for its current state. That input node will transition to the other state only when its state goes outside the range of its current state.

The output interface model is more complex than the input model, but shares the same basic configuration of a resistor and capacitor in parallel to simulate loading. For the output case, there are such connections to two nodes, the digital ground node and the digital power node. Both of

these nodes must be specified on the instance line.

The capacitance to the high node is specified by **CHI**, and the capacitance to the low node is **CLO**. The resistors in parallel with these capacitors are variable, and have values that depend on the state. In the low state (S0), the resistance values are: **S0RLO** and **S0RHI**. In the high state (S1) ,the resistance values are: **S1RLO** and **S1RHI**. Transition to the high state occurs exponentially over a time of **S1TSW**, and to the low state **S0TSW**.

The device's delay is given by the model parameter **DELAY**. Any input changes that affect the device's outputs are propagated after this delay.

Another caveat is that closely spaced input transitions to the **Xyce** digital behavioral models may not be accurately reflected in the output states. In particular, input-state changes spaced by more than `DELAY` seconds have independent effects on the output states. However, two input-state changes (S1 and S2) that occur within `DELAY` seconds (e.g., at time=t1 and time=t1+0.5*`DELAY`) have the effect of masking the effects of S1 on the device's output states, and only the effects of S2 are propagated to the device's output states.

### DCOP Calculations for Flip-Flops and Latches

The behavior of the digital devices during the DC Operating Point (DCOP) calculations can be controlled via the `IC1` and `IC2` instance parameters and the `DIGINITSTATE` device option. See 2.3.25 and 2.1.18 for more details on these instance parameters and device option.

### Converting Y-Type Digital Devices to U-Type Digital Devices

**Xyce** is migrating the digital behavioral devices to U devices. The goal is increased compatibility with PSpice netlists. This subsection gives four examples of how to convert an existing **Xyce** netlist using Y-type digital devices to the corresponding U device syntaxes. The conversion process depends on whether the device has a fixed number of inputs or a variable number of inputs. In all cases, the the model parameters **VREF**, **VLO** and **VHI** should be omitted from the U device model card. For U devices, the nodes **vlo** and **vhi** are always specified on the instance line.

Example 1: Fixed number of inputs, Y-device model card contains **VREF**, **VLO** and **VHI**. Assume **VREF**=**VLO**.

```
YNOT THENOT in out DMOD
.model DMOD DIG (
+ CLO=1e-12  CHI=1e-12
+ S0RLO=5  S0RHI=5  S0TSW=5e-9
+ S0VLO=-1  S0VHI=1.8
+ S1RLO=200  S1RHI=5  S1TSW=5e-9
+ S1VLO=1  S1VHI=3
+ RLOAD=1000
+ CLOAD=1e-12
+ VREF=0 VLO=0 VHI=3
+ DELAY=20ns )
```

```
* Digital power node.  Assume digital ground node = GND
V1 DPWR 0 3V
UTHENOT INV DPWR 0 in out DMOD1
.model DMOD1 DIG (
+ CLO=1e-12  CHI=1e-12
+ S0RLO=5  S0RHI=5  S0TSW=5e-9
+ S0VLO=-1  S0VHI=1.8
+ S1RLO=200  S1RHI=5  S1TSW=5e-9
+ S1VLO=1  S1VHI=3
+ RLOAD=1000
+ CLOAD=1e-12
+ DELAY=20ns )
```

Example 2: Fixed number of inputs, Y-device instance line contains **vlo**, **vhi** and **vref**. Assume **vref=vlo**.

```
YNOT THENOT vlo vhi vref in out DMOD1
UTHENOT INV vhi vlo in out DMOD1
```

Example 3: Variable number of inputs, Y-device model card contains **VREF**, **VLO** and **VHI**. Assume **VREF=VLO**.

```
YAND MYAND in1 in2 out DMOD
UMYAND AND(2) DPWR 0 in1 in2 out DMOD1
```

Example 4: Variable number of inputs, Y-device instance line contains **vlo**, **vhi** and **vref**. Assume **vref=vlo**.

```
YAND MYAND vlo vhi vref in1 in2 out DMOD1
UMYAND AND(2) vhi vlo in1 in2 out DMOD1
```

### 2.3.27 Accelerated mass

Simulation of electromechanical devices or magnetically driven machines may require that **Xyce** simulate the movement of an accelerated mass, that is, to solve the second order initial value problem

$$\begin{aligned} \frac{d^2x}{dt} &= a(t) \\ x(0) &= x_0 \\ \dot{x}_0 &= v_0 \end{aligned}$$

where $x$ is the position of the object, $\dot{x}$ its velocity, and $a(t)$ the acceleration. In **Xyce**, this simulation capability is provided by the accelerated mass device.

---

**Instance Form**

```
YACC <name> <acceleration node> <velocity node> <position node>
+ [v0=<initial velocity>] [x0=<initial position>]
```

---

**Examples**

```
* Simulate a projectile thrown upward against gravity
V1 acc 0 -9.8
R1 acc 0 1
YACC acc1 acc vel pos v0=10 x0=0
.print tran v(pos)
.tran 1u 10s
.end

* Simulate a damped, forced harmonic oscillator
* assuming K, c, mass, amplitude and frequency
* are defined in .param statements
B1 acc 0 V={(-K * v(pos) - c*v(vel))/mass
+            + amplitude*sin(frequency*TIME)}
R1 acc 0 1
YACC acc2 acc vel pos v0=0 x0=0.4
.print tran v(pos)
.tran 1u 10s
.end
```

---

**Comments**

When used as in the examples, **Xyce** will emit warning messages about the `pos` and `vel` nodes not having a DC path to ground. This is normal and should be ignored. The position and velocity nodes should not be connected to any real circuit elements. Their values may, however, be used in behavioral sources; this is done in the second example.

## 2.3.28 Power Grid

The Power Grid devices are a family of device models that can be used to model steady-state power flow in electric power grids. They include device models for branches, bus shunts, transformers and generator buses.

Power flow in electric power grids can be modeled as a complex-valued voltage-current problem with standard admittance-matrix techinques. This approach solves the system of equations $I = YV$, and is termed `IV` format in this document. However, it is more typically modeled as a power-flow problem that solves the system of equations $S = P + jQ = VI^*$, where $S$ is the complex power flow, $V$ and $I$ are complex-valued quantities, and $I^*$ is the complex conjugate of $I$. The complex power flow can then be solved in either rectangular or polar coordinates. These two solution formats are termed PQ Rectangular (aka, `PQR` format) and PQ Polar (aka, `PQP` format) in this document. The variables for each solution format are described in more detail in the device descriptions given below.

In all three formulations,an Equivalent Real Formulation (ERF) [31] must be used for compatibility with the existing solver libraries in **Xyce**. More details on these equations are given below after the individual device descriptions.

### PowerGridBranch

---

**Instance Form**

```
Y<type> <name> <input node1> <output node1>
+ <input node2> <output node2> [device parameters]
```

---

**Examples**

```
YPowerGridBranch pg1_2 VR1 VR2 VI1 VI2 AT=IV R=0.05 B=0.1 X=0.05
YPGBR pg1_2a VR1 VR2 VI1 VI2 AT=IV R=0.05 B=0.1 X=0.05
YPowerGridBranch pg1_2b VR1 VR2 VI1 VI2 AT=PQR R=0.05 B=0.1 X=0.05
YPGBR pg1_2c VR1 VR2 VI1 VI2 AT=PQR R=0.05 B=0.1 X=0.05
YPowerGridBranch pg1_2d Th1 Th2 VM1 VM2 AT=PQP R=0.05 B=0.1 X=0.05
YPGBR pg1_2e Th1 Th2 VM1 VM2 AT=PQP R=0.05 B=0.1 X=0.05
```

---

**Parameters and Options**

`type`
: The device type has a verbose (`PowerBranchBranch`) and a shortened (`PGBR`) form. Their usage may be mixed within a netlist.

`name`
: Name of the device instance. This must be present, and unique amongst the `PowerGridBranch` devices in the netlist.

`input node`
: There are two input nodes, `<input node1>` and `<input node2>`, whose definitions depend on the AnalysisType (`AT`) specified. Both nodes must be specified. This device can be viewed as a generalized 4-port resistor, using the Equivalent Real Form (ERF) described below in the

equation subsections. For IV and PQR formats, <input node1> is the real part (VR) of the voltage at terminal 1 while <input node2> is the imaginary part (VI) of the voltage at terminal 1. For PQP format, <input node1> is the angle ($\Theta$ or Th) of the voltage at terminal 1 while <input node2> is the magnitude (VM or $|V|$) of the voltage at terminal 1. Finally, by analogy to other **Xyce** devices, node 1 can be considered as the positive terminal for this device, while node 2 is the negative terminal.

output node
: There are two output nodes, <output node1> and <output node2>, whose definitions depend on the AnalysisType (AT) specified. Both nodes must be specified. This device can be viewed as a generalized 4-port resistor, using the ERF described below in the equation subsections. For IV and PQR formats, <output node1> is the real part (VR) of the voltage at terminal 2 while <output node2> is the imaginary part (VI) of the voltage at terminal 2. For PQP format, <output node1> is the angle ($\Theta$ or Th) of the voltage at terminal 2 while <output node2> is the magnitude (VM or $|V|$) of the voltage at terminal 2. Finally, by analogy to other **Xyce** devices, node 2 can be considered as the negative terminal for this device, while node 1 is the positive terminal.

AT
: This device supports all three analysis types (AT), namely IV, PQR and PQP. The equations for these analysis types are described below. All power grid devices, of all types, in a **Xyce** netlist must use the same analysis type. This constraint is not checked during netlist parsing. Violation of this constraint may cause unpredictable results.

B
: Branch susceptance, given in per unit. As discussed in the Equation section below, the susceptance value given on the branch description lines in IEEE Common Data Format (CDF) files is split equally between terminals 1 and 2.

R
: Branch resistance, given in per unit.

X
: Branch reactance, given in per unit.

## PowerGridBranch Device Parameters

Table 2.110: PowerGridBranch Device Instance Parameters

| Parameter | Description | Units | Default |
|---|---|---|---|
| AT | Analysis Type | – | 'PQP' |
| B | Branch Shunt Susceptance | per unit | 1 |
| R | Branch Resistance | per unit | 1 |
| X | Branch Reactance | per unit | 1 |

## PowerGridBusShunt

**Instance Form**

```
Y<type> <name> <input node1> <output node1>
+ <input node2> <output node2 [device parameters]
```

**Examples**

```
YPowerGridBusShunt pg1_2 VR1 VR2 VI1 VI2 AT=IV R=0.05 B=0.1 X=0.05
YPGBS pg1_2a VR1 VR2 VI1 VI2 AT=IV R=0.05 B=0.1 X=0.05
YPowerGridBusShunt pg1_2b VR1 VR2 VI1 VI2 AT=PQR R=0.05 B=0.1 X=0.05
YPGBS pg1_2c VR1 VR2 VI1 VI2 AT=PQR R=0.05 B=0.1 X=0.05
YPowerGridBusShunt pg1_2d Th1 Th2 VM1 VM2 AT=PQP R=0.05 B=0.1 X=0.05
YPGBS pg1_2e Th1 Th2 VM1 VM2 AT=PQP R=0.05 B=0.1 X=0.0
```

**Parameters and Options**

`type`

The device type has a verbose (`PowerGridBusShunt`) and a shortened (`PGBS`) form. Their usage may be mixed within a netlist.

`name`

Name of the device instance. This must be present, and unique amongst the `PowerGridBusShunt` devices in the netlist.

`input node`

There are two input nodes, `<input node1>` and `<input node2>`, whose definitions depend on the AnalysisType (`AT`) specified. Both nodes must be specified. This device can be viewed as a generalized 4-port resistor, using the Equivalent Real Form (ERF) described below in the equation subsections. For `IV` and `PQR` formats, `<input node1>` is the real part (`VR`) of the voltage at terminal 1 while `<input node2>` is the imaginary part (`VI`) of the voltage at terminal 1. For `PQP` format, `<input node1>` is the angle ($\Theta$ or `Th`) of the voltage at terminal 1 while `<input node2>` is the magnitude (`VM` or $|V|$) of the voltage at terminal 1. Finally, by analogy to other **Xyce** devices, node 1 can be considered as the positive terminal for this device, while node 2 is the negative terminal.

`output node`

There are two output nodes, `<output node1>` and `<output node2>`, whose definitions depend on the AnalysisType (`AT`) specified. Both nodes must be specified. This device can be viewed as a generalized 4-port resistor, using the ERF described below in the equation subsections. For `IV` and `PQR` formats, `<output node1>` is the real part (`VR`) of the voltage at terminal 2 while `<output node2>` is the imaginary part (`VI`) of the voltage at terminal 2. For `PQP` format, `<output node1>` is the angle ($\Theta$ or `Th`) of the voltage at terminal 2 while `<output node2>` is the magnitude (`VM` or $|V|$) of the voltage at terminal 2. Finally, by analogy to other **Xyce** devices, node 2 can be considered as the negative terminal for this device, while node 1 is the positive terminal.

`AT` This device supports all three analysis types (`AT`), namely `IV`, `PQR` and `PQP`. The equations for these analysis types are described below. All

power grid devices, of all types, in a **Xyce** netlist must use the same analysis type. This constraint is not checked during netlist parsing. Violation of this constraint may cause unpredictable results.

`B` Shunt susceptance, given in per unit.

`G` Shunt conductance, given in per unit.

## Bus Shunt Device Parameters

Table 2.111: PowerGridBusShunt Device Instance Parameters

| Parameter | Description | Units | Default |
|---|---|---|---|
| `AT` | Analysis Type | – | 'PQP' |
| `B` | Shunt Susceptance | per unit | 1 |
| `G` | Shunt Conductance | per unit | 1 |

## PowerGridTransformer

---

**Instance Form**

```
Y<type> <name> <input node1> <output node1>
+ <input node2> <output node2> [control node] [device parameters]
```

---

**Examples**

```
YPowerGridTransformer pg1_2 VR1 VR2 VI1 VI2 AT=IV R=0.05 X=0.05
+ TR=0.9 PS=0.1
YPGTR pg1_2a VR1 VR2 VI1 VI2 AT=IV R=0.05 X=0.05 TR=0.9 PS={18*PI/180}
YPowerGridTransformer pg1_2b VR1 VR2 VI1 VI2 AT=PQR R=0.05 X=0.05
+ TR=0.9 PS=0.1
YPGTR pg1_2c VR1 VR2 VI1 VI2 AT=PQR R=0.05 B=0.1 X=0.05 TR=0.9 PS=0.1
YPowerGridTransformer pg1_2d Th1 Th2 VM1 VM2 AT=PQP
+ R=0.05 X=0.05 PS={18*PI/180}
YPGTR pg1_2e Th1 Th2 VM1 VM2 AT=PQP R=0.05 X=0.0 TR=0.9 PS=0.1
YPGTR pg1_2f Th1 Th2 VM1 VM2 N AT=PQP R=0.05 X=0.0 TT=2 PS=0.1
YPGTR pg1_2g Th1 Th2 VM1 VM2 Phi AT=PQP R=0.05 X=0.0 TT=3 TR=0.9
```

---

**Parameters and Options**

`type`
: The device type has a verbose (`PowerGridTransformer`) and a shortened (`PGTR`) form. Their usage may be mixed within a netlist.

`name`
: Name of the device instance. This must be present, and unique amongst the `PowerGridTransformer` devices in the netlist.

`input node`

There are two input nodes, `<input node1>` and `<input node2>`, whose definitions depend on the AnalysisType (`AT`) specified. Both nodes must be specified. This device can be viewed as a generalized 4-port resistor, using the Equivalent Real Form (ERF) described below in the equation subsections. For `IV` and `PQR` formats, `<input node1>` is the real part (`VR`) of the voltage at terminal 1 while `<input node2>` is the imaginary part (`VI`) of the voltage at terminal 1. For `PQP` format, `<input node1>` is the angle ($\Theta$ or `Th`) of the voltage at terminal 1 while `<input node2>` is the magnitude (`VM` or $|V|$) of the voltage at terminal 1. Finally, by analogy to other **Xyce** devices, node 1 can be considered as the positive terminal for this device, while node 2 is the negative terminal.

`output node`

There are two output nodes, `<output node1>` and `<output node2>`, whose definitions depend on the AnalysisType (`AT`) specified. Both nodes must be specified. This device can be viewed as a generalized 4-port resistor, using the ERF described below in the equation subsections. For `IV` and `PQR` formats, `<output node1>` is the real part (`VR`) of the voltage at terminal 2 while `<output node2>` is the imaginary part (`VI`) of the voltage at terminal 2. For `PQP` format, `<output node1>` is the angle ($\Theta$ or `Th`) of the voltage at terminal 2 while `<output node2>` is the magnitude (`VM` or $|V|$) of the voltage at terminal 2. Finally, by analogy to other **Xyce** devices, node 2 can be considered as the negative terminal for this device, while node 1 is the positive terminal.

`control input`

This is an optional node. However, it must be specified on the instance line if the transformer type (`TT`) is set to either 2 or 3. It does not exist, and must not be specified on the instance line, for the default of `TT`=1. The use of the `control input` node is covered under the definition of the `TT` instance parameter.

`AT` This device supports all three analysis types (`AT`), namely `IV`, `PQR` and `PQP`. The equations for these analysis types are described below. All power grid devices, of all types, in a **Xyce** netlist must use the same analysis type. This constraint is not checked during netlist parsing. Violation of this constraint may cause unpredictable results.

`PS` Phase shift given in radians. As illustrated above, `PS={18*PI/180}` is a convenient syntax for converting between decimal degrees and radians on a **Xyce** instance line. This instance parameter is ignored if `TT`=3, since the phase shift is set by the optional `control node` in that case.

`R` Resistance, given in per unit.

`TR` Turns ratio, given in per unit. This instance parameter is ignored if `TT`=2, since this value is set by the optional `control node` in that case..

`X` Reactance, given in per unit.

`TT` This is the "Transformer Type". It allows the user to implement tap-changing transformers, by attaching an appropriate control-circuit to the `control input` node. The allowed values for `TT` are 1, 2 or 3, with a default value of 1. Any other values will cause a netlist parsing error. A transformer type of 1 has a fixed turns-ratio, and is a four-terminal device with two input nodes (`<input node1>` and `<input node2>`) and two output nodes (`<output node1>` and `<output node2>`). Let the effective complex turns ratio be $r = m + jp = n*(cos(\phi) + j*sin(\phi))$. The transformer type of 2 exposes the $n$ variable as the `control input` node, while the transformer type of 3 exposes the $\phi$ variable as the `control input` node. The instantaneous value of $n$ (or $\phi$) will then be set to the voltage applied to the `control input` node. There will be no current draw into (or out of) the `control input` node. This device model does not yet support simultaneously varying both $n$ and $\phi$.

## Transformer Device Parameters

Table 2.112: PowerGridTransformer Device Instance Parameters

| Parameter | Description | Units | Default |
|---|---|---|---|
| `AT` | Analysis Type | – | 'PQP' |
| `PS` | Phase Shift | rad | 0 |
| `R` | Resistance | per unit | 1 |
| `TR` | Transformer Turns Ratio | per unit | 1 |
| `TT` | Transformer Type | – | 1 |
| `X` | Reactance | per unit | 1 |

## PowerGridGenBus

**Instance Form**

```
Y<type> <name> <input node1> <output node1>
+ <input node2> <output node2> [device parameters]
```

**Examples**

```
YPowerGridGenBus GenBus1 Th1 0 VM1 0 AT=PQP VM=1.045 P=0.4
YPGGB GenBus2 Th2 GND VM2 GND AT=PQP VM=1.045 P=0.4
```

**Parameters and Options**

`type`

The device type has a verbose (`PowerGridGenBus`) and a shortened (`PGGB`) form. Their usage may be mixed within a netlist.

`name`

Name of the device instance. This must be present, and unique amongst the `PowerGridGenBus` devices in the netlist.

`input node`

There are two input nodes, `<input node1>` and `<input node2>`, whose definitions depend on the AnalysisType (`AT`) specified. Both nodes must be specified. This device can be viewed as a generalized 4-port resistor, using the Equivalent Real Form (ERF) described below in the equation subsections. For `IV` and `PQR` formats, `<input node1>` is the real part (`VR`) of the voltage at terminal 1 while `<input node2>` is the imaginary part (`VI`) of the voltage at terminal 1. For `PQP` format, `<input node1>` is the angle ($\Theta$ or `Th`) of the voltage at terminal 1 while `<input node2>` is the magnitude (`VM` or $|V|$) of the voltage at terminal 1. Finally, by analogy to other **Xyce** devices, node 1 can be considered as the positive terminal for this device, while node 2 is the negative terminal.

`output node`

There are two output nodes, `<output node1>` and `<output node2>`, whose definitions depend on the AnalysisType (`AT`) specified. Both nodes must be specified. This device can be viewed as a generalized 4-port resistor, using the ERF described below in the equation subsections. For `IV` and `PQR` formats, `<output node1>` is the real part (`VR`) of the voltage at terminal 2 while `<output node2>` is the imaginary part (`VI`) of the voltage at terminal 2. For `PQP` format, `<output node1>` is the angle ($\Theta$ or `Th`) of the voltage at terminal 2 while `<output node2>` is the magnitude (`VM` or $|V|$) of the voltage at terminal 2. Finally, by analogy to other **Xyce** devices, node 2 can be considered as the negative terminal for this device, while node 1 is the positive terminal.

`AT` This device currently only supports the `PQP` analysis type (`AT`). The equations for the `PQP` analysis type are described below. All power grid devices, of all types, in a **Xyce** netlist must use the same analysis type. This constraint is not checked during netlist parsing. Violation of this constraint may cause unpredictable results.

`P` Generator Output Power, given in per unit. As noted below, positive real power (`P`) and positive reactive power (`Q`) flow out of the positive (`<input node1>` and `<input node2>`) terminals into the power grid. This is opposite from the normal convention for voltage and current sources in **Xyce** and SPICE.

`QLED`

This is the Q-Limit Enforcement Delay. It is only used if either `QMAX` or `QMIN` is specified. The Q-Limits are not enforced for the first `QLED` Newton iterations of the DC Operating Point (DCOP) calculation. This may be useful if a given generator bus has, for example, a very small value of `QMIN` [32]. If `QMAX` or `QMIN` is specified and `QLED` is omitted then the default `QLED` value of 0 is used.

QMAX
: The upper limit on the reactive power (Q) flow into the power grid, given in per unit. If this parameter is omitted on the instance line then no upper limit on the reactive power flow is enforced. It is recommended that either both QMAX and QMIN be specified or that both be omitted.

QMIN
: The lower limit on the reactive power (Q) flow into the power grid, given in per unit. If this parameter is omitted on the instance line then no lower limit on the reactive power flow is enforced. It is recommended that either both QMAX and QMIN be specified or that both be omitted.

VM
: Fixed voltage magnitude, given in per unit.

## Generator Bus Device Parameters

Table 2.113: PowerGridGenBus Device Instance Parameters

| Parameter | Description | Units | Default |
|---|---|---|---|
| AT | Analysis Type | – | 'PQP' |
| P | Generator Output Power | per unit | 1 |
| QLED | Q-Limit Enforcement Delay | – | 0 |
| QMAX | Reactive Power Max Limit | per unit | 1 |
| QMIN | Reactive Power Min Limit | per unit | 0 |
| VM | Voltage Magnitude | per unit | 1 |

## Branch Current and Power Accessors

This version of the Power Grid devices does not support the branch current accessor, I(), or the power accessors, P() or W().

## Model Limitations

The following features are not supported by this release of the Power Grid device models.

- The Generator Bus device model only supports the PQ Polar format. So, reactive power (QMAX and QMIN) limits in the Generator Bus device model are also only supported for that format.
- Tap-changing transformers with a variable turns ratio and/or a variable phase shift.
- Magnetizing susceptance for transformers.

## Equivalent Real Form

An Equivalent Real Form (ERF) must be used to make the complex-valued voltage-current and power-flow equations compatible with the real-valued solvers used by **Xyce**. The equations given below use a K1 ERF [31], which solves the complex-valued system of equations $I = YV$ as follows. Let $Y = (g + jb)$, $V = (V_R + jV_I)$ and $I = (I_R + jI_I)$. Then the equivalent set of real-valued equations is:

$$\begin{bmatrix} I_R \\ I_I \end{bmatrix} = \begin{bmatrix} g & -b \\ g & b \end{bmatrix} \begin{bmatrix} V_R \\ V_I \end{bmatrix} \tag{2.23}$$

## Y Matrices for Power Grid Branch and Bus Shunt

The Y-Matrix for the `PowerGridBranch` device can be expressed as follows where $A = (R+jX)^{-1}$, $R$ is the branch resistance, $X$ is the branch reactance and $B$ is the branch shunt susceptance given on the device's instance line:

$$\begin{bmatrix} Y_{11} & Y_{12} \\ Y_{21} & Y_{22} \end{bmatrix} = \begin{bmatrix} g_{11} + jb_{11} & g_{12} + jb_{12} \\ g_{21} + jb_{21} & g_{22} + jb_{22} \end{bmatrix} = \begin{bmatrix} A & -A + 0.5j * B \\ -A + 0.5j * B & A \end{bmatrix} \tag{2.24}$$

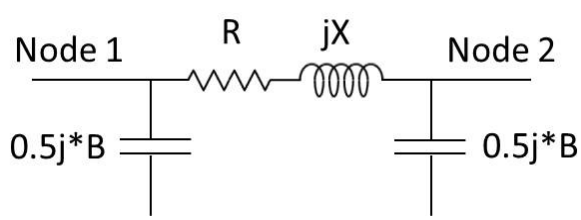


**Figure 2.3.** Lumped $\Pi$ Model for PowerGridBranch.

The Y-Matrix for the `PowerGridBusShunt` device can be expressed as follows where $G$ is the bus shunt conductance and $B$ is the bus shunt susceptance given on the device's instance line:

$$\begin{bmatrix} Y_{11} & Y_{12} \\ Y_{21} & Y_{22} \end{bmatrix} = \begin{bmatrix} g_{11} + jb_{11} & g_{12} + jb_{12} \\ g_{21} + jb_{21} & g_{22} + jb_{22} \end{bmatrix} = \begin{bmatrix} G + jB & -G - jB \\ -G - jB & G + jB \end{bmatrix} \tag{2.25}$$

## Equations Common to Power Grid Branch and Bus Shunt

The `PowerGridBranch` and `PowerGridBusShunt` devices use the same basic equations to model voltage and current flow or voltage and power flow. The differences are in the Y-Matrices described above. There are three options for the equations used, namely I=YV, PQ Polar and PQ Rectangular.

For the I=YV format, the device equations for the `PowerGridBranch` and `PowerGridBusShunt` devices are as follows, where the $g_{ij}$ and $b_{ij}$ terms are given above. Also, $V_{R1}$ and $V_{I1}$ are the real

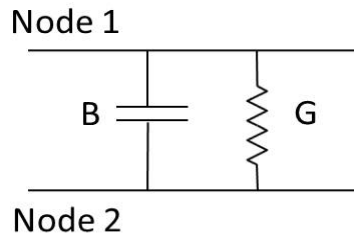


**Figure 2.4.** Equivalent Circuit for PowerGridBusShunt.

and imaginary parts of the voltage at terminal 1. $I_{R1}$ and $I_{I1}$ are the real and imaginary parts of the current at terminal 1.

$$\begin{bmatrix} I_{R1} \\ I_{R2} \\ I_{I1} \\ I_{I2} \end{bmatrix} = \begin{bmatrix} g_{11} & g_{12} & -b_{11} & -b_{12} \\ g_{21} & g_{22} & -b_{21} & -b_{22} \\ b_{11} & b_{12} & g_{11} & g_{12} \\ b_{21} & b_{22} & g_{21} & g_{22} \end{bmatrix} \begin{bmatrix} V_{R1} \\ V_{R2} \\ V_{I1} \\ V_{I2} \end{bmatrix} \tag{2.26}$$

For the PQ Rectangular format, the device equations are nonlinear [32].

$$P_1 = g_{11}(V_{R1}^2 + V_{I1}^2) + V_{R1}(g_{12} * V_{R2} - b_{12} * V_{I2}) + V_{I1}(b_{12} * V_{R2} + g_{12} * V_{I2}) \tag{2.27}$$
$$P_2 = g_{22}(V_{R2}^2 + V_{I2}^2) + V_{R2}(g_{21} * V_{R1} - b_{21} * V_{I1}) + V_{I2}(b_{21} * V_{R1} + g_{21} * V_{I1}) \tag{2.28}$$
$$Q_1 = -b_{11}(V_{R1}^2 + V_{I1}^2) + V_{I1}(g_{12} * V_{R2} - b_{12} * V_{I2}) + V_{R1}(b_{12} * V_{R2} + g_{12} * V_{I2}) \tag{2.29}$$
$$Q_2 = -b_{22}(V_{R2}^2 + V_{I2}^2) + V_{I2}(g_{21} * V_{R1} - b_{21} * V_{I1}) + V_{R2}(b_{21} * V_{R1} + g_{21} * V_{I1}) \tag{2.30}$$

For the PQ Polar format, the device equations are also nonlinear [32]. Define $|V_1|$ as the voltage magnitude at terminal 1 and $\Theta_1$ as the voltage angle at terminal 1.

$$P_1 = g_{11} * |V_1|^2 + |V_1| * |V_2| * (g_{12} * cos(\Theta_1 - \Theta_2) + b_{12} * sin(\Theta_1 - \Theta_2)) \tag{2.31}$$
$$P_2 = g_{22} * |V_2|^2 + |V_2| * |V_1| * (g_{21} * cos(\Theta_2 - \Theta_1) + b_{21} * sin(\Theta_2 - \Theta_1)) \tag{2.32}$$
$$Q_1 = -b_{11} * |V_1|^2 + |V_1| * |V_2| * (g_{12} * sin(\Theta_1 - \Theta_2) - b_{12} * cos(\Theta_1 - \Theta_2)) \tag{2.33}$$
$$Q_2 = -b_{22} * |V_2|^2 + |V_2| * |V_1| * (g_{21} * sin(\Theta_2 - \Theta_1) - b_{21} * cos(\Theta_2 - \Theta_1)) \tag{2.34}$$

## Equations for Power Grid Transformer

The equations for the PowerGridTransformer device are similar to those used by the PowerGrid-Branch and PowerGridBusShunt devices. The circuit diagram for the PowerGridTransformer is shown below.

For I=YV and PQ Rectangular formats, the equations are the same as for the `PowerGridBranch` and `PowerBusBusShunt` devices. However, the following Y-Matrix is used where where $A = (R +$

$jX)^{-1}$, $R$ is the resistance, $X$ is the reactance, $n$ is the turns ratio (which is the `TR` instance parameter) and $\phi$ is the phase shift in radians (which is the `PS` instance parameter).

For the I=YV and PQ Rectangular formats, the Y matrix is not symmetric and is given by the following [33]. Let the effective complex turns ratio be $r = m + jp = n * (cos(\phi) + j * sin(\phi))$:

$$\begin{bmatrix} Y_{11} & Y_{12} \\ Y_{21} & Y_{22} \end{bmatrix} = \begin{bmatrix} g_{11} + jb_{11} & g_{12} + jb_{12} \\ g_{21} + jb_{21} & g_{22} + jb_{22} \end{bmatrix} = \begin{bmatrix} A * (m^2 + p^2)^{-1} & -A * (m - jp)^{-1} \\ -A * (m + jp)^{-1} & A \end{bmatrix} \quad (2.35)$$

The voltage-current and power flow equations for the I=YV and PQ Rectangular formats are then the same as for the `PowerGridBranch` and `PowerGridBusShunt` devices, with the modified Y-matrix parameters given above.

For the PQ Polar format, the Y matrix is not symmetric and is given by [32]:

$$\begin{bmatrix} Y_{11} & Y_{12} \\ Y_{21} & Y_{22} \end{bmatrix} = \begin{bmatrix} g_{11} + jb_{11} & g_{12} + jb_{12} \\ g_{21} + jb_{21} & g_{22} + jb_{22} \end{bmatrix} = \begin{bmatrix} A * n^{-2} & -A * n^{-1} \\ -A * n^{-1} & A \end{bmatrix} \quad (2.36)$$

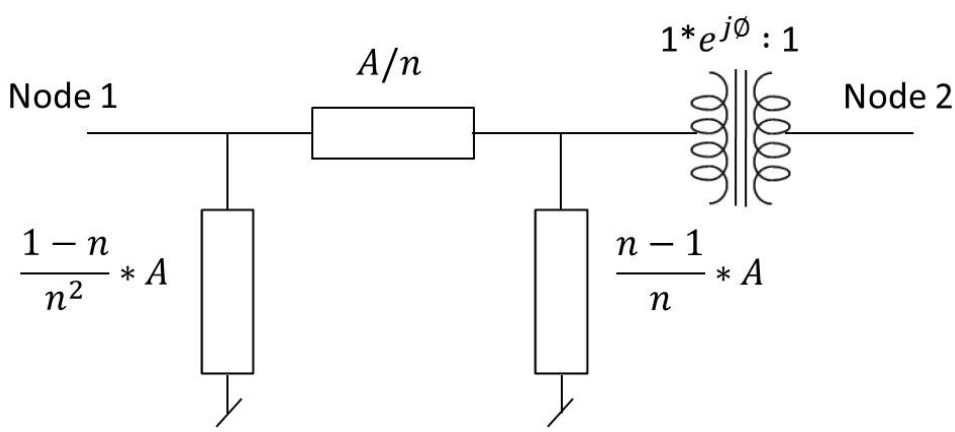


**Figure 2.5.** Equivalent Circuit for PowerGridTransformer.

The power flow equation for PQ Polar format are then:

$$P_1 = g_{11} * |V_1|^2 + |V_1| * |V_2| * (g_{12} * cos(\Theta_1 - \Theta_2 - \phi) + b_{12} * sin(\Theta_1 - \Theta_2 - \phi)) \quad (2.37)$$
$$P_2 = g_{22} * |V_2|^2 + |V_2| * |V_1| * (g_{21} * cos(\Theta_2 - \Theta_1 + \phi) + b_{21} * sin(\Theta_2 - \Theta_1 + \phi)) \quad (2.38)$$
$$Q_1 = -b_{11} * |V_1|^2 + |V_1| * |V_2| * (g_{12} * sin(\Theta_1 - \Theta_2 - \phi) - b_{12} * cos(\Theta_1 - \Theta_2 - \phi)) \quad (2.39)$$
$$Q_2 = -b_{22} * |V_2|^2 + |V_2| * |V_1| * (g_{21} * sin(\Theta_2 - \Theta_1 + \phi) - b_{21} * cos(\Theta_2 - \Theta_1 + \phi)) \quad (2.40)$$

## Equations for Power Grid Gen Bus

The `PowerGridGenBus` is an active device that functions as an ideal generator with a fixed power output ($P$) and voltage magnitude ($VM$). Reactive power (`QMAX` and `QMIN`) limits are also sup-

ported. The device equations for the PQ Polar format are as follows [32]. The other solution formulations are not supported in this release. If reactive power limits are not being enforced then:

$$P_1 = P \tag{2.41}$$

$$|V_1| = VM \tag{2.42}$$

If reactive power limits are being enforced then $P_1$ is still held constant but the behavior of the $V_1$ terminal changes between a constant-voltage and a constant-current source. In particular, $|V_1| = VM$ only if `QMIN` $< Q_1 <$ `QMAX`. Otherwise, $|V_1|$ is unconstrained and the appropriate `QMIN` or `QMAX` value is enforced at the $V_1$ terminal instead.

The convention for Power Grids is that positive power is injected into the grid. So, positive real (P) and reactive power (Q) flow out of the positive terminals (`inputNode 1` and `inputNode 2`). This is reversed from the normal convention for current direction for voltage and current sources in either **Xyce** or SPICE.

## 2.3.29 Memristor Device

**Symbol**

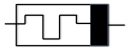

**Instance Form**

```
ymemristor <name> <(+) node> <(-) node> <model>
```

**Model Form**

```
.MODEL <model name> MEMRISTOR level=2 [model parameters]
```

**Examples**

```
ymemristor mr1 n1 n2 mrm1
.model mrm1 memristor level=2 ron=50 roff=1000
+ koff=1.46e-18 kon=-4.68e-22
+ alphaoff=10 alphaon=10 wc=1.0e-12
+ ioff=115e-6 ion=-8.9e-6 xscaling=1.0e9 wt=4


ymemristor mr1 n1 n2 mrm1 xo=0.11

.MODEL mrm1 memristor level=3 a1=0.17 a2=0.17 b=0.05 vp=0.16 vn=0.15
+ ap=4000 an=4000 xp=0.3 xn=0.5 alphap=1 alphan=5 eta=1
```

**Parameters and Options**

`(+) node`
`(-) node`
: Polarity definition for a positive voltage across the memristor. The first node is defined as positive. Therefore, the voltage across the component is the first node voltage minus the second node voltage.

**Comments**

The `level=2` memristor device is an implementation of the TEAM formulation described in [34] and [35]. The `level=3` memristor device is an implementation of the Yakopcic formulation described in [36].

Positive current flows from the `(+)` node through the device to the `(-)` node. The power through the device is calculated with $I \cdot \Delta V$ where the voltage drop is calculated as $(V_+ - V_-)$ and positive current flows from $V_+$ to $V_-$.

## Device Equations for TEAM Formulation

The current voltage relationship for the TEAM formulation can be linear or nonlinear and this is selectable with the instance parameter `IVRELATION`. The default is the linear relationship which is:

$$v(t) = \left[R_{ON} + \frac{R_{OFF} - R_{ON}}{x_{OFF} - x_{ON}}\left(x - x_{ON}\right)\right] i(t) \tag{2.43}$$

The non-linear relationship is:

$$v(t) = R_{ON} e^{\lambda(x - x_{ON})/(x_{OFF} - x_{ON})} i(t) \tag{2.44}$$

where $\lambda$ is defined as:

$$\frac{R_{OFF}}{R_{ON}} = e^{\lambda} \tag{2.45}$$

In the above equations $x$ represents a doped layer whose growth determines the overall resistance of the device. The equation governing the value of $x$ is:

$$\frac{dx}{dt} = \begin{cases} k_{OFF}\left(\frac{i}{i_{OFF}} - 1\right)^{\alpha_{OFF}} f_{OFF}(x) & 0 < i_{OFF} < i \\ 0 & i_{ON} < i < i_{OFF} \\ k_{ON}\left(\frac{i}{i_{on}} - 1\right)^{\alpha_{on}} f_{ON}(x) & i < i_{ON} < 0 \end{cases} \tag{2.46}$$

The functions $f_{ON}(x)$ and $f_{OFF}(x)$ are window functions designed to keep $x$ within the defined limits of $x_{ON}$ and $x_{OFF}$. Four different types of window functions are available and this is selectable with the model parameter `WT`. Note that the TEAM memristor device is formulated to work best with the TEAM, Kvatinsky, window function `WT=4` . Other window functions should be used with caution.

## Device Parameters for TEAM Formulation

Table 2.114: MemristorTEAM Device Instance Parameters

| Parameter | Description | Units | Default |
|---|---|---|---|
| `IVRELATION` | IV relationship to use, 0 is linear, 1 is nonlinear | – | 0 |

## Model Parameters for TEAM Formulation

Table 2.115: MemristorTEAM Device Model Parameters

| Parameter | Description | Units | Default |
|---|---|---|---|
| `ALPHAOFF` | Modeling Coefficient | – | 3 |

Table 2.115: MemristorTEAM Device Model Parameters

| Parameter | Description | Units | Default |
|---|---|---|---|
| ALPHAON | Modeling Coefficient | – | 3 |
| AOFF | Window Function Parameter (window 4) | m | 3e-09 |
| AON | Window Function Parameter (window 4) | m | 0 |
| D | Window Function Parameter (windows 1, 2 and 3) | – | 0.000115 |
| IOFF | Current scale in off state | Ω | 0.000115 |
| ION | Current scale in On state | A | 8.9e-06 |
| J | Window Function Parameter (window 3) | – | 0.000115 |
| KOFF | Modeling Coefficient | m/s | 8e-13 |
| KON | Modeling Coefficient | m/s | -8e-13 |
| P | Window Function Parameter (windows 1, 2 and 3) | – | 0.000115 |
| ROFF | Resistence in off state | Ω | 1000 |
| RON | Resistence in on state | Ω | 50 |
| WC | Window Function Parameter (window 4) | m | 1.07e-12 |
| WT | Type of windowing function: 0-None, 1-Jogelkar, 2-Biolek, 3-Prodromakis, 4-Kvatinsky | – | 0 |
| XOFF | Modeling Coefficient | m | 3e-09 |
| XON | Modeling Coefficient | m | 0 |
| XSCALING | Scaling for x variable. For example 1e9 if x will be in units of nanometers. | – | 1 |

## Device Parameters for Yakopcic Formulation

Table 2.116: MemristorYakopcic Device Instance Parameters

| Parameter | Description | Units | Default |
|---|---|---|---|
| XO | Initial value for internal variable x | – | 0 |

## Model Parameters for Yakopcic Formulation

Table 2.117: MemristorYakopcic Device Model Parameters

| Parameter | Description | Units | Default |
|---|---|---|---|
| A1 | Dielectric layer thickness parameter [dimensionless] | – | 1 |
| A2 | Dielectric layer thickness parameter [dimensionless] | – | 1 |

Table 2.117: MemristorYakopcic Device Model Parameters

| Parameter | Description | Units | Default |
|---|---|---|---|
| ALPHAN | State variable motion. | – | 1 |
| ALPHAP | State variable motion. | – | 1 |
| AN | Negative Voltage Threshold Magnitude Parameter | – | 1 |
| AP | Positive Voltage Threshold Magnitude Parameter | – | 1 |
| B | Curvature in I-V relation. Relates to how much conduction in the device is Ohmic and versus tunnel barrier. | – | 1 |
| ETA | State variable motion relative to voltage. | – | 1 |
| RESDELTA | RTN model in resistance: Base change in resistance for RTN | Ω | 0 |
| RESDELTAGRAD | RTN model in resistance: Base change in resistance for RTN scaled by R | – | 0 |
| RESEPTD | RTN model in resistance: Minimum allowed update time | s | 1e-10 |
| RESLAMBDA | RTN model: lambda | – | 0 |
| RESNOISE | RTN model in resistance (on/off) | – | false |
| RESSEED | RTN model in resistance: seed | – | 0 |
| RESTD | RTN model in resistance: Update time | s | 0 |
| VN | Negative Voltage Threshold | V | -0.01 |
| VP | Positive Voltage Threshold | V | 0.01 |
| XDELTA | RTN model in growth: Base change in growth rate for RTN | Ω | 0 |
| XDELTAGRAD | RTN model in growth: Base change in growth for RTN scaled by X | – | 0 |
| XEPTD | RTN model in growth: Minimum allowed update time | s | 1e-10 |
| XLAMBDA | RTN growth model: lambda | – | 0 |
| XN | State variable motion. | – | 1 |
| XNOISE | RTN model in growth (on/off) | – | false |
| XP | State variable motion. | – | 1 |
| XSCALING | Scaling for x variable. For example 1e9 if x will be in units of nanometers. | – | 1 |
| XSEED | RTN model in growth: seed | – | 0 |
| XTD | RTN model in growth: Update time | s | 0 |

## 2.3.30 Subcircuit

A subcircuit can be introduced into the circuit netlist using the specified nodes to substitute for the argument nodes in the definition. It provides a building block of circuitry to be defined a single time and subsequently used multiple times in the overall circuit netlists. See Section 2.1.28 for more information about subcircuits.

---

**Instance Form**

```
X<name> [node]* <subcircuit name> [PARAMS: [<name> = <value>]*]
```

---

**Examples**

```
X12 100 101 200 201 DIFFAMP
XBUFF 13 15 UNITAMP
XFOLLOW IN OUT VCC VEE OUT OPAMP
XFELT 1 2 FILTER PARAMS: CENTER=200kHz
XNANDI 25 28 7 MYPWR MYGND PARAMS: IO_LEVEL=2
```

---

**Parameters and Options**

`subcircuit name`
: The name of the subcircuit's definition.

`PARAMS:`
: Passed into subcircuits as arguments and into expressions inside the subcircuit.

---

**Comments**

There must be an equal number of nodes in the subcircuit call and in its definition.

Subcircuit references may be nested to any level. However, the nesting cannot be circular. For example, if subcircuit `A`'s definition includes a call to subcircuit `B`, then subcircuit `B`'s definition cannot include a call to subcircuit `A`.

# 2.4 TCAD Devices

Semiconductor device simulation, which is based on a coupled set of partial differential equations (PDE's) is supported in **Xyce**. Such devices can be invoked from the circuit netlist, in a similar manner to traditional SPICE-style analog devices. One dimensional and two dimensional devices are supported, with the dimensionality determined by the device model level.

**1D Device Form**

```
YPDE <name> <node> [node] [model name]
+ [na=<value>] [nd=<value>]
+ [nx=<value>] [area=<value>]
+ [graded=<value>]
+ [wj=<value>] [l=<value>] [w=<value>]
+ [tecplotlevel=<value>]
+ [gnuplotlevel=<value>]
+ [node=<tabular data>]
+ [region=<tabular data>]
+ [bulkmaterial=<string>]
+ [temp=<value>]
```

---

**2D Device Form**

```
YPDE <name> <node> <node> [node][node] [model name]|
+ [na=<value>] [nd=<value>]
+ [meshfile=<filename.msh>]
+ [nx=<value>][ny=<value>]
+ [l=<value>][w=<value>]
+ [node=<tabular data>]
+ [region=<tabular data>]
+ [x0=<value>] [cyl=<value>]
+ [tecplotlevel=<value>]
+ [gnuplotlevel=<value>] [txtdatalevel=<value>]
+ [bulkmaterial=<string>]
+ [temp=<value>]
```

---

**Model Form**

```
.MODEL <model name> ZOD [model parameters]
```

---

**Comments**

Most of the PDE parameters are specified on the instance level. At this point the model statement is only used for specifying if the device is 1D or 2D, via the level parameter. Both the 1D and the 2D devices can construct evenly spaced meshes, internally. The 2D device also has the option of reading in an unstructured mesh from an external mesh file, but this is currenly an alpha-level capability.

The electrode tabular data specification is explained in detail in table 2.123 Similarly, the doping region tabular data specification is explained in detail in table 2.121.

## TCAD Device Parameters

Most TCAD device parameters are specified on the instance level. There is only one TCAD device model parameter, the level.

Table 2.118: 1D PDE (level 1) Device Instance Parameters

| Parameter | Description | Units | Default |
|---|---|---|---|
| AUGER | Flag to turn on/off Auger recombination | logical (T/F) | true |
| BULKMATERIAL | Bulk semiconductor material | – | 'SI' |
| FIELDDEP | If true, use field dependent mobility. | logical (T/F) | false |
| MOBMODEL | Mobility model. | – | 'ARORA' |
| NX | Number of mesh points | – | 11 |
| SRH | Flag to turn on/off Shockley-Read-Hall recombination. | logical (T/F) | true |
| ***Doping Parameters*** | | | |
| DOPING_FILE | File containing doping profile. | – | 'NOFILE' |
| GRADED | Flag for graded junction vs. abrupt junction. (1/true=graded, 0/false=abrupt) | logical (T/F) | false |
| NA | Acceptor doping level | $cm^{-3}$ | 1e+15 |
| ND | Donor doping level | $cm^{-3}$ | 1e+15 |
| WJ | Junction width, if graded junction enabled. | cm | 0.0001 |
| ***Geometry Parameters*** | | | |
| ANODE.AREA | Anode area (used for two-terminal devices) | $cm^{-2}$ | 0 |
| AREA | Cross sectional area of the device. | $cm^{-2}$ | 1 |
| BASE.AREA | Base area (used for three-terminal (BJT) devices) | $cm^{-2}$ | 0 |
| BASE.LOC | Location of base contact (necessary if running with three terminals). | cm | 0.0005 |
| CATHODE.AREA | Cathode area (used for two-terminal devices) | $cm^{-2}$ | 0 |
| COLLECTOR.AREA | Collector area (used for three-terminal (BJT) devices) | $cm^{-2}$ | 0 |
| EMITTER.AREA | Emitter area (used for three-terminal (BJT) devices) | $cm^{-2}$ | 0 |
| L | Device width. | cm | 0.001 |
| W | Device width. | cm | 0.001 |
| ***Temperature Parameters*** | | | |
| TEMP | Device temperature | °C | 27 |
| ***Model Output Parameters*** | | | |

Table 2.118: 1D PDE (level 1) Device Instance Parameters

| Parameter | Description | Units | Default |
|---|---|---|---|
| FIRSTELECTRODEOFFSET | This is an output parameter. It is only used if OFFSETOUTPUTVOLTAGE=true. (see description of that paramaeter | logical (T/F) | false |
| GNUPLOTLEVEL | Flag for gnuplot output. 0 - no gnuplot files. 1 - gnuplot files. gnuplot is an open source plotting program that is usually installed on Linux systems. gnuplot files will have the *Gnu.dat suffix, and the prefix will be thename of the device instance. | – | 1 |
| OFFSETOUTPUTVOLTAGE | This is an output parameter that determines the "zero" of the potential at output. If OFFSETOUTPUTVOLTAGE=true (default) it will adjust the voltages at output so that the minimum voltage is zero. If true and also FIRSTELECTRODEOFFSET=true, then the voltage of the first electrode is the zero point. If OFFSETOUTPUTVOLTAGE=false, the output voltage sets the intrisic Fermi level to zero. Depending on circumstances each of these may be more or less convenient for plotting. | logical (T/F) | true |
| OUTPUTINTERVAL | Time interval for tecplot output (if tecplot is enabled). | s | 0 |
| OUTPUTNLPOISSON | Flag to determine if the results of the nonlinear Poisson calculation is included in the output files. Normally, this calculation is used to initialize a drift-diffusion calculation and isn't of interest. | logical (T/F) | false |
| TECPLOTLEVEL | Setting for Tecplot output: 0 - no Tecplot files 1 - Tecplot files, each output in a separate file. 2 - Tecplot file, each outputappended to a single file. Tecplot files will have the .dat suffix, and the prefix will be the name of the device instance | – | 1 |
| | ***Scaling Parameters*** | | |
| C0 | Density scalar; adjust to mitigate convergence problems.The model will do all of its scaling automatically, so it is generally not necessary to specify it manually. | $cm^{-3}$ | 1e+15 |
| DENSITYSCALARFRACTION | Fraction of the maximum doping by which density will be scaled.The model will do all of its scaling automatically, so it is generally not necessary to specify it manually. | logical (T/F) | 0.1 |
| SCALEDENSITYTOMAXDOPING | If set the density will be scaled by a fraction of the maximum doping.The model will do all of its scaling automatically, so it is generally not necessary to specify it manually. | logical (T/F) | true |

Table 2.118: 1D PDE (level 1) Device Instance Parameters

| Parameter | Description | Units | Default |
|---|---|---|---|
| t0 | Time scalar; adjust to mitigate convergence problems.The model will do all of its scaling automatically, so it is generally not necessary to specify it manually. | s | 1e-06 |
| X0 | Length scalar; adjust to mitigate convergence problems.The model will do all of its scaling automatically, so it is generally not necessary to specify it manually. | cm | 1e-07 |

Table 2.119: 2D PDE (level 2) Device Instance Parameters

| Parameter | Description | Units | Default |
|---|---|---|---|
| BULKMATERIAL | Material of bulk material. | – | 'SI' |
| MESHFILE | This is a required field for a 2D simulation. If the userspecifies meshfile=internal.mesh, the model will create aCartesian mesh using the parameters L,W,NX and NY. If the user specifies anything else (for example meshfile=diode.msh), the model will attempt to read in a mesh file of that name. The format is assumed to be that of the SG Framework. | – | 'internal.msh' |
| MOBMODEL | Mobility model. | – | 'ARORA' |
| NX | Number of mesh points, x-direction. | – | 11 |
| NY | Number of mesh points, y-direction. | – | 11 |
| ***Doping Parameters*** | | | |
| GRADED | Flag for graded junction vs. abrupt junction. (1/true=graded, 0/false=abrupt) | logical (T/F) | false |
| NA | Acceptor doping level | $cm^{-3}$ | 1e+15 |
| ND | Donor doping level | $cm^{-3}$ | 1e+15 |
| WJ | Junction width, if graded junction enabled. | cm | 0.0001 |
| ***Geometry Parameters*** | | | |
| AREA | Cross sectional area of the device. | $cm^{-2}$ | 1 |
| CYL | Flag to enable cylindrical geometry | logical (T/F) | false |
| L | Device length | cm | 0.001 |
| W | Device width | cm | 0.001 |
| ***Temperature Parameters*** | | | |
| TEMP | Device temperature | °C | 27 |
| ***Model Output Parameters*** | | | |

Table 2.119: 2D PDE (level 2) Device Instance Parameters

| Parameter | Description | Units | Default |
|---|---|---|---|
| GNUPLOTLEVEL | Flag for gnuplot output. 0 - no gnuplot files. 1 - gnuplot files. gnuplot is an open source plotting program that is usually installed on Linux systems. gnuplot files will have the *Gnu.dat suffix, and the prefix will be thename of the device instance. | – | 0 |
| OUTPUTINTERVAL | Time interval for tecplot output (if tecplot is enabled). | s | 0 |
| OUTPUTNLPOISSON | Flag to determine if the results of the nonlinear Poisson calculation is included in the output files. Normally, this calculation is used to initialize a drift-diffusion calculation and isn't of interest. | logical (T/F) | false |
| TECPLOTLEVEL | Setting for Tecplot output: 0 - no Tecplot files 1 - Tecplot files, each output in a separate file. 2 - Tecplot file, each outputappended to a single file. Tecplot files will have the .dat suffix, and the prefix will be the name of the device instance | – | 1 |
| TXTDATALEVEL | Flag for volume-averaged text output. 0 - no text files. 1 - text files. txtdataplot files will have the *.txt suffix, and the prefix will be the name of the device instance. | – | 1 |
| ***Scaling Parameters*** | | | |
| X0 | Length scalar; adjust to mitigate convergence problems. The model will do all of its scaling automatically, so it is generally not necessary to specify it manually. | cm | 0.0001 |

Table 2.120: PDE Device Model Parameters

| Parameter | Description | Units | Default |
|---|---|---|---|
| LEVEL | The level determines if this is a 1D or a 2D device. 1=1D, 2=2D | – | 1 |

## Doping Parameters

Table 2.121: PDE Device Doping Region Parameters. These correspond to the region instance parameter.

| Parameter | Description | Units | Default | Device Type |
|---|---|---|---|---|
| ***All Levels*** | | | | |
| function | functional form of doping region. Options are uniform, gaussian, and step. | | uniform | 1D,2D |

Table 2.121: PDE Device Doping Region Parameters. These correspond to the region instance parameter.

| Parameter | Description | Units | Default | Device Type |
|---|---|---|---|---|
| `type` | Ntype of Ptype | | ntype | 1D,2D |
| `nmax` | Maximum value of impurity concentration. | $cm^{-3}$ | 1.0e15 | 1D,2D |
| `nmin` | Minimum value of impurity concentration. | $cm^{-3}$ | 1.0e15 | 1D,2D |
| `xloc` | Peak location | cm | 0.0 | 1D,2D |
| `xwidth` | Distance from nmax to nmin, if applicable. This is only applicable for the function=gaussian case. | | 1.0e-3 | 1D,2D |
| `flatx` | This parameter determines if we're doing a half gaussian or a full gaussian. See table 2.122 | - | 0 | 1D,2D |
| | ***Level 2 (2D) only*** | | | |
| `yloc` | Same as xloc, but for the y-direction. | cm | 0.0 | 2D |
| `ywidth` | Same as xwidth, but for the y-direction. | cm | 1.0e-3 | 2D |
| `flaty` | Same as flatx, but for the y-direction. | - | 0 | 2D |

## Flat Parameters

Table 2.122: Description of the flatx, flaty doping parameters

| Flatx or Flaty view | Description | 1D Cross Section |
|---|---|---|
| `0` | Gaussian on both sides of the peak (`xloc`) location. | |
| `+1` | Gaussian if `x>xloc`, flat (constant at the peak value) if `x<xloc`. | |
| `-1` | Gaussian if `x<xloc`, flat (constant at the peak value) if `x>xloc`. | |

## Electrode Parameters

Table 2.123: PDE Device Electrode Parameters.

| Parameter | Description | Units | Default |
|---|---|---|---|
| | ***Level 2 (2D) only*** | | |
| `name` | Electrode name | - | anode |
| `bc` | Carrier Density Boundary condition type (dirichlet or neumann) | - | dirichlet |

Table 2.123: PDE Device Electrode Parameters.

| Parameter | Description | Units | Default |
|---|---|---|---|
| `start` | Starting location | cm | 0.0 |
| `end` | Ending location | cm | 0.0 |
| `side` | Side specification (top, bottom, left or right) | - | top |
| `material` | Contact material | | neutral |
| `oxidebndryflag` | Oxide layer boolean | - | false (0) |
| `oxthick` | Oxide thickness | cm | 0.0 |
| `oxcharge` | Oxide charge | C | 0.0 |

## 2.4.1 Physical Models

This section contains information about physical models used in **Xyce** for TCAD devices. This includes various mobility models, expressions for calculating the effective mass for electrons and holes, an expression for intrinsic carrier concentration as a function of temperature, expressions which describe contacts to metal as well as contacts to metal-oxide-semiconductor devices.

### Material Models and Parameters

This section describes some of the basic material properties that are available in **Xyce**. Described here are the models for effective mass, intrinsic carrier concentration, and the bandgap. This information is needed for the more complex models described in the mobility section (section 2.4.2) and the boundary condition section (section 2.4.2).

### Effective Mass

**Xyce** includes functions which return the effective mass of electrons and holes for a number of semiconductor materials.

### Electron Effective Mass

The electron effective mass is calculated as

$$m_{de} = (m_l^* m_t^{*2})^{1/3} \tag{2.47}$$

where $m_l$ and $m_t$ are the effective masses along the longitudinal and transverse directions of the ellipsoidal energy surface.

### Hole Effective Mass

The hole effective mass is calculated as

$$m_{dh} = (m_{lh}^{*3/2} + m_{hh}^{*3/2})^{2/3} \tag{2.48}$$

where $m_{lh}$ and $m_{hh}$ are the ”light” and ”heavy” hole masses, respectively.

### Intrinsic Carrier Concentration

The intrinsic carrier concentration in a semiconductor is obtained from the ”np” product

$$np = n_i^2 = N_C N_V exp(-E_g/kT) \tag{2.49}$$

or

$$n_i = \sqrt{N_C N_V} e^{-E_g/2kT} \tag{2.50}$$

The expression used in **Xyce** to calculate the intrinsic carrier concentration comes from this and is given by

$$n_i = 4.9 \times 10^{15} (\frac{m_{de} m_{dh}}{m_0^2})^{3/4} M_c^{1/2} T^{3/2} e^{-E_g/2kT} \tag{2.51}$$

where $M_c$ is the number of equivalent minima in the conduction band for the semiconductor, $m_{de}$ is the density-of-state effective mass for electrons, $m_{dh}$ is the density-of-state effective mass for holes, and $m_0$ is the free-electron mass.

Table 2.124: Intrinsic Carrier Concentration Parameters

| **Semiconductor** | **Symbol** | $M_c^{1/2}$ | $n_i$ **at room temperature** |
|---|---|---|---|
| Silicon | si | $\sqrt{6.00}$ | $1.25x10^{10}$ |
| Germanium | ge | $2.00$ | $2.5x10^{13}$ |
| Galium Arsenide | gaas | $1.00$ | $2.0x10^{6}$ |

## Bandgap

The bandgap is a material and temperature-dependent quantity. The bandgap model for semiconductor materials, is based on Thurmond [37]. This model is given by:

$$E_g = E_{g0} - A * \left( \frac{T^{2.0}}{T + T_{off}} \right) \tag{2.52}$$

where $E_g$ is the bandgap (eV) and $T$ is the temperature (K). $A$, $E_{g0}$, and $T_{off}$ are all material-dependent constants. Insulating materials, such as silicon dioxide, are assumed to have constant bandgaps, so their bandgaps are given by:

$$E_g = E_{g0} \tag{2.53}$$

where $E_{g0}$ is a material-dependent constant. The values for the material-dependent constants used by equations 2.52 and 2.53 are given in Table 2.125.

Table 2.125: Bandgap constants

| **Material** | **Symbol** | $E_{g0}$ **(eV)** | $A$ | $T_{off}$ **(K)** |
|---|---|---|---|---|

Table 2.125: Bandgap constants

| Material | Symbol | $E_{g0}$ (eV) | $A$ | $T_{off}$ (K) |
|---|---|---|---|---|
| Silicon | si | 1.17 | 4.73e-4 | 636.0 |
| Germanium | ge | 0.7437 | 4.774e-4 | 235.0 |
| Galium Arsenide | gaas | 1.519 | 5.405e-4 | 204.0 |
| Silicon Dioxide | sio2 | 9.00 | NA | NA |
| Silicon Nitride | wdi | 4.7 | NA | NA |
| Sapphire | cu | 4.7 | NA | NA |

## 2.4.2 Mobility Models

A number of mobility models are included in **Xyce**. The analytic, arora, and carrier-carrier scattering models are considered to be low-field mobility models. The Lombardi surface mobility model is a transverse-field dependent model which also incorporates the mobility of the bulk silicon.

### Analytic Mobility

This is a concentration- and temperature-dependent empirical mobility model, based on the work of Caughey and Thomas [38], which combines the effects of lattice scattering and ionized impurity scattering. The equation for the mobility of electrons is:

$$\mu_{0n} = \mu_{nmin} + \frac{\mu_{nmax}(\frac{T}{T_{ref}})^{nun} - \mu_{nmin}}{1 + (\frac{T}{T_{ref}})^{xin}(N_{total}/N_n^{ref})^{\alpha_n}} \tag{2.54}$$

and the equation for the mobility of holes is:

$$\mu_{0p} = \mu_{pmin} + \frac{\mu_{pmax}(\frac{T}{T_{ref}})^{nup} - \mu_{pmin}}{1 + (\frac{T}{T_{ref}})^{xip}(N_{total}/N_p^{ref})^{\alpha_p}} \tag{2.55}$$

where $N_{total}$ is the local total impurity concentration (in $\#/cm^3$), $T_{ref}$ is a reference temperature (300.15K), and T is the temperature (in degrees K). The parameters $N_n^{ref}$ and $N_p^{ref}$ are reference values for the doping concentration. The analytic mobility model can be selected by using the statement ”mobmodel=analytic” in the netlist.

The parameters for the analytic mobility model are given in Table 2.126.

Table 2.126: Analytic Mobility Parameters

| Parameter | Silicon | GaAs |
|---|---|---|
| $\mu_{nmin}$ | 55.24 | 0.0 |
| $\mu_{nmax}$ | 1429.23 | 8500.0 |
| $N_n^{ref}$ | 1.072e17 | 1.69e17 |
| nun | -2.3 | -1.0 |
| xin | -3.8 | 0.0 |
| $\alpha_n$ | 0.73 | 0.436 |
| $\mu_{pmin}$ | 49.70 | 0.0 |
| $\mu_{pmax}$ | 479.37 | 400.0 |
| $N_p^{ref}$ | 1.606e17 | 2.75e17 |
| nup | -2.2 | -2.1 |
| xip | -3.7 | 0.0 |
| $\alpha_p$ | 0.70 | 0.395 |
| | | |

## Arora Mobility

This mobility model is also an analytic model which depends on impurity concentration and temperature. It comes from the work of Arora, *et al.* [39] and is based on both experimental data and the modified Brooks-Herring theory of mobility. The equation for the mobility of electrons is:

$$\mu_{0n} = \mu_{n1}(\frac{T}{T_{ref}})^{exn1} + \frac{\mu_{n2}(\frac{T}{T_{ref}})^{exn2}}{1 + (\frac{N_{total}}{Cn(\frac{T}{T_{ref}})^{exn3}})^{\alpha_n}} \tag{2.56}$$

and the equation for the mobility of holes is:

$$\mu_{0p} = \mu_{p1}(\frac{T}{T_{ref}})^{exp1} + \frac{\mu_{p2}(\frac{T}{T_{ref}})^{exp2}}{1 + (\frac{N_{total}}{Cp(\frac{T}{T_{ref}})^{exp3}})^{\alpha_p}} \tag{2.57}$$

where

$$\alpha_n = An(\frac{T}{T_{ref}})^{exn4} \tag{2.58}$$

and

$$\alpha_p = Ap(\frac{T}{T_{ref}})^{exp4} \tag{2.59}$$

The Arora mobility model can be selected by including the statement ”mobmodel=arora” in the netlist. The parameters for the arora mobility model are given in Table 2.127.

Table 2.127: Arora Mobility Parameters

| Parameter | Silicon | GaAs |
|---|---|---|
| $\mu_{n1}$ | 88.0 | 8.5e3 |
| $\mu_{n2}$ | 1252.0 | 0.0 |
| Cn | 1.26e17 | 1.26e17 |
| An | 0.88 | 0.0 |
| exn1 | -0.57 | -0.57 |
| exn2 | -2.33 | 0.0 |
| exn3 | 2.4 | 0.0 |
| exn4 | -0.146 | 0.0 |
| $\mu_{p1}$ | 54.3 | 4e2 |
| $\mu_{p2}$ | 407.0 | 0.0 |
| Cp | 2.35e17 | 2.35e17 |
| Ap | 0.88 | 0.0 |
| exp1 | -0.57 | 0.0 |
| exp2 | -2.23 | 0.0 |
| exp3 | 2.4 | 0.0 |
| exp4 | -0.146 | 0.0 |
| | | |

## Carrier-Carrier Scattering Mobility

This mobility model is based on the work of Dorkel and Leturq [40]. It incorporates carrier-carrier scattering effects, which are important when high concentrations of electrons and holes are present in the device. This model also takes lattice scattering and ionized impurity scattering into account. One important difference between the carrier-carrier scattering mobility model and the two previous mobility models (analytic and arora models) is that the carrier-carrier scattering mobility model depends upon the actual carrier concentrations in the device. This model is important for modeling breakdown as well as various radiation effects, which often result in very high carrier densities.

The expressions for the carrier-carrier model are as follows:

$$\mu_L = \mu_{L0}(\frac{T}{T_{ref}})^{-\alpha} \tag{2.60}$$

where $\mu_L$ is the lattice mobility, which has to do with scattering due to acoustic phonons.

$$\mu_I = \frac{AT^{3/2}}{N}[ln(1+\frac{BT^2}{N}) - \frac{BT^2}{N+BT^2}]^{-1} \tag{2.61}$$

where $\mu_I$ is the impurity mobility which is related to the interactions between the carriers and the ionized impurities.

$$\mu_{ccs} = \frac{2\times 10^{17}T^{3/2}}{\sqrt{pn}}[ln(1+8.28\times 10^8 T^2(pn)^{-1/3})]^{-1} \tag{2.62}$$

where $\mu_{ccs}$ is the carrier-carrier scattering mobility, which is very important when both types of carriers are at high concentration.

$$X = \sqrt{\frac{6\mu_L(\mu_I+\mu_{ccs})}{\mu_I\mu_{ccs}}} \tag{2.63}$$

is an intermediate term and

$$\mu = \mu_L[\frac{1.025}{1+(X/1.68)^{1.43}} - 0.025] \tag{2.64}$$

is the carrier mobility. The carrier-carrier scattering mobility can be selected by including the statement ”mobmobel=carr” in the netlist. The parameters for the carrier-carrier mobility model are given in Table 2.128.

Table 2.128: Carrier-Carrier Mobility Parameters

| Parameter | Carrier | Silicon | GaAs |
|---|---|---|---|
| Al | $e^-$ | 1430.0 | 8.50e3 |
| Bl | $e^-$ | -2.2 | 0.0 |
| Ai | $e^-$ | 4.61e17 | 4.61e17 |
| Bi | $e^-$ | 1.52e15 | 1.52e15 |
| Al | $h^+$ | 495.0 | 4.0e2 |
| Bl | $h^+$ | -2.2 | 0.0 |
| Ai | $h^+$ | 1.00e17 | 1.00e17 |
| Bi | $h^+$ | 6.25e14 | 6.25e14 |
| | | | |

## Lombardi Surface Mobility Model

This mobility model combines expressions for mobility at the semiconductor-oxide interface and in bulk silicon. It is based on the work of Lombardi *et al.* [41]. The overall mobility is found using Mathiessen's rule:

$$\frac{1}{\mu} = \frac{1}{\mu_{ac}} + \frac{1}{\mu_b} + \frac{1}{\mu_{sr}} \tag{2.65}$$

where $\mu_{ac}$ is the carrier mobility due to scattering with surface acoustic phonons, $\mu_b$ is the carrier mobility in bulk silicon, and $\mu_{sr}$ is the carrier mobility limited by surface roughness scattering.

The Lombardi model is a more physics-based surface mobility model. It is a semi-empirical model for carrier mobility, and the expressions for the individual scattering mechanisms were extracted from experimental data taken in appropriate experimental conditions.

The expressions used in this model are given below:

$$\mu_{ac,n} = \frac{bn}{E_\perp} + \frac{cnN^{exn4}}{T(E_\perp)^{1/3}} \tag{2.66}$$

is the expression for electron mobility for acoustic phonon scattering,

$$\mu_{ac,p} = \frac{bp}{E_\perp} + \frac{cpN^{exp4}}{T(E_\perp)^{1/3}} \tag{2.67}$$

is the expression for hole mobility for acoustic phonon scattering,

$$\mu_{b,n} = \mu_{n0} + \frac{\mu_{max,n} - \mu_{n0}}{1 + (N/crn)^{exn1}} - \frac{\mu_{n1}}{1 + (csn/N)^{exn2}} \tag{2.68}$$

is the expression for bulk mobility for electrons, where

$$\mu_{max,n} = \mu_{n2}(\frac{T}{T_{ref}})^{-exn3} \tag{2.69}$$

and

$$\mu_{b,p} = \mu_{p0}exp(-pc/N) + \frac{\mu_{max,p}}{1+(N/crp)^{exp1}} - \frac{\mu_{p1}}{1+(csp/N)^{exp2}} \tag{2.70}$$

is the expression for bulk mobility for holes, where

$$\mu_{max,p} = \mu_{p2}(\frac{T}{T_{ref}})^{-exp3} \tag{2.71}$$

The expression for electrons for surface roughness scattering is

$$\mu_{sr,n} = (\frac{dn}{E_{\perp}^{exn8}}) \tag{2.72}$$

and the expression for holes for surface roughness scattering is

$$\mu_{sr,p} = (\frac{dp}{E_{\perp}^{exp8}}) \tag{2.73}$$

The parameters for the lombardi surface mobility model are given in Table2.129.

Table 2.129: Lombardi Surface Mobility Parameters

| Parameter | Silicon | GaAs |
|---|---|---|
| $\mu_{n0}$ | 52.2 | 0.0 |
| $\mu_{n1}$ | 43.4 | 0.0 |
| $\mu_{n2}$ | 1417.0 | 1e6 |
| crn | 9.68e16 | 9.68e16 |
| csn | 3.43e20 | 0.0 |
| bn | 4.75e7 | 1e10 |
| cn | 1.74e5 | 0.0 |
| dn | 5.82e14 | 1e6 |
| exn1 | 0.680 | 0.0 |
| exn2 | 2.0 | 0.0 |
| exn3 | 2.5 | 0.0 |
| exn4 | 0.125 | 0.0 |
| exn8 | 2.0 | 0.0 |
| $\mu_{p0}$ | 44.9 | 0.0 |
| $\mu_{p1}$ | 29.0 | 0.0 |
| $\mu_{p2}$ | 470.5 | 1.0 |
| crp | 2.23e17 | 2.23e17 |
| csp | 6.1e20 | 0.0 |
| bp | 9.93e6 | 1e10 |
| cp | 8.84e5 | 0.0 |
| dp | 2.05e14 | 1e6 |
| exp1 | 0.719 | 0.0 |
| exp2 | 2.0 | 0.0 |
| exp3 | 2.2 | 0.0 |
| exp4 | 0.0317 | 0.0 |
| exp8 | 2.0 | 0.0 |
| pc | 9.23e16 | 0.0 |
| | | |

## Edge Mobilities

Mobility values are calculated along the edge connecting two nodes. In the case of the analytic, arora, and surface mobility models, the edge mobilities are calculated by taking the average of the mobilities at the two nodes. Then, the mobility along the edge connecting nodes 1 and 2 is:

$$\mu_{edge} = (\mu[1] + \mu[2])/2.0 \tag{2.74}$$

In the case of the carrier-carrier scattering mobility, the edge mobilities were calculated differently. The electron and hole concentrations were first calculated at the midpoint of the edge using a ”product” average and then these values of ”n” and ”p” were used in the function to calculate the mobility at the midpoint of the edge. For example, if n[1] and n[2] are the electron concentrations at nodes 1 and 2, the electron concentration along the edge is given by:

$$n_{edge} = \sqrt{n[1] * n[2]} \tag{2.75}$$

Subsequently, the mobility at the midpoint of an edge is found by using the values of electron and hole concentration at the midpoint of the edge when calling the function which returns the mobility, calcMob().

$$\mu_{n,edge}^{carrier} = f(n_{edge}) \tag{2.76}$$

This method makes more sense, especially when the electron and hole concentrations vary by several orders of magnitude. Then it approximates taking the average of the logarithms.

## Boundary Conditions for Electrode Contacts

This section describes various boundary conditions that need to be applied to the semiconductor boundary. **Xyce** is predominantly an analog circuit simulator, and the TCAD (PDE-based) device modeling that has been implemented in **Xyce** takes external circuit information as input. This input consists of voltages and currents which are applied as boundary conditions to the semiconductor domain.

The physical connection from the circuit to the device generally includes a variety of materials, including metals and oxides. Electrical differences between the semiconductor and the contact material can result in a potential barrier that must be included in the imposed voltage boundary condition.

There are three general types of contacts between the circuit and the TCAD device that are handled by **Xyce**. The first is the ”neutral” contact, in which it is simply assumed that the electrode material does not impose any addition potential barrier to that of the Fermi level differences in the semiconductor. The second is the Schottky contact, in which the electrode is a specified metal, and a potential barrier is imposed to account for the workfunction difference between the metal and the semiconductor. The last type of contact is the metal-oxide-semiconductor contact, in which the workfunction difference, and the voltage drop across the oxide must be accounted for.

## Neutral Contacts

A neutral contact refers to the case in which the contact is made to the semiconductor itself, and barrier heights due to material differences are not considered. This is the simplest type of contact in **Xyce**, and problems which use this type of contact are generally easier to solve, compared with other types of contacts. In this case, the boundary is given by

$$V_{bc} = V_{ckt} + V_{bi} \tag{2.77}$$

where $V_{ckt}$ is the potential applied by the circuit and $V_{bi}$ is the "built-in" potential of the semiconductor. For a p-type substrate, the built-in potential is given by

$$V_{bi} = -\frac{kT}{q} ln(\frac{N_A}{n_i}) \tag{2.78}$$

and for an n-type substrate, the built-in potential is given by

$$V_{bi} = \frac{kT}{q} ln(\frac{N_D}{n_i}) \tag{2.79}$$

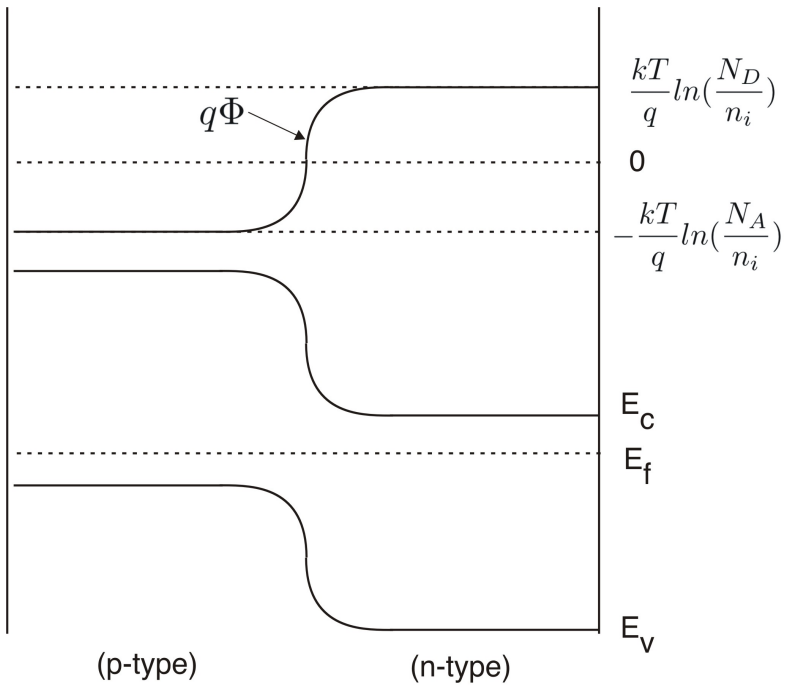


**Figure 2.6.** Neutral Contacts.

$V_{bi}$ represents the extent of the energy band bending due to the doping of a device. While most of the dramatic changes will happen away from the contact, near junctions, it is still incorporated into the voltage boundary condition to maintain a flat potential near the contacts. Figure 2.6 shows the energy band variation across a PN junction, and the corresponding electrostatic potential. This variation is due to the internal physics of the device, and needs to be there even in the event of zero applied voltage. This is partially enforced by the solution to Poisson's equation, and also by the application of equation 2.77.

## Schottky Contacts

In the case of a metal-semiconductor contact, it is necessary to add the workfunction difference, $\Phi_{ms}$, to the potential in the semiconductor [42]. $\Phi_m$ is a constant for a given metal, and $\Phi_s$ is a

function of the doping in the semiconductor. The workfunction potential, $\Phi$, when multiplied by q, is the difference between the Fermi level and vacuum in the material. In essence, the workfunction difference represents the distance between the Fermi level in the metal and the Fermi level in the semiconductor when considering the individual band structures.

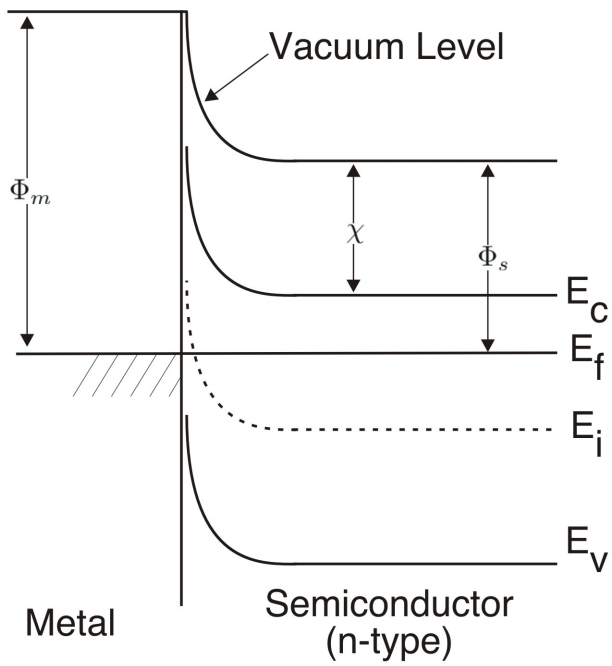


**Figure 2.7.** Schottky Contact, N-type.

In the case of an n-type semiconductor, the semiconductor workfunction can be represented as

$$\Phi_s = \chi + (E_C - E_{FS})/q \tag{2.80}$$

where $\chi$ is the electron affinity in the semiconductor and q$\chi$ is the distance between the conduction band and vacuum in the semiconductor. $E_C$ is the conduction band energy and $E_{FS}$ is the Fermi level of the semiconductor. Rewriting this expression in terms of the doping concentration, it becomes

$$\Phi_s = \chi + E_g/2 - V_t ln(\frac{N_d}{n_i}) \tag{2.81}$$

In the case of a p-type semiconductor, the semiconductor workfunction can be represented as

$$\Phi_s = \chi + E_g/2 + (E_i - E_{FS})/q \tag{2.82}$$

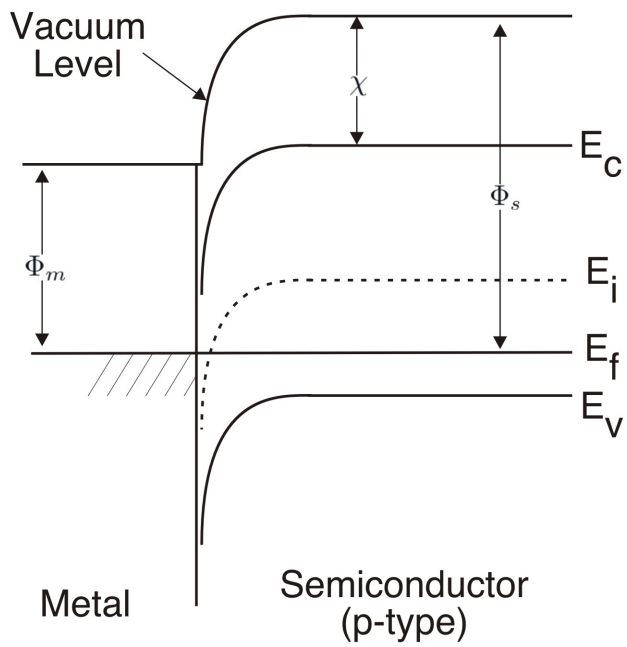


**Figure 2.8.** Schottky Contact, P-type.

where $E_i$ is the intrinsic value of the Fermi level, and can be approximated as the halfway point between the conduction band ($E_C$) and the valance band ($E_V$). Rewriting this expression in terms of the doping concentration

$$\Phi_s = \chi + E_g/2 + V_t ln(\frac{N_a}{n_i}) \tag{2.83}$$

For the TCAD devices in **Xyce**, for a node at a metal-semiconductor contact, the quantity $\Phi_m - \Phi_s$ is added to the potential at the node to account for the metal-semiconductor barrier. The current values of metal workfunctions used in **Xyce** are given in Table 2.130. The values for electron affinity are given in Table 2.131. The boundary condition for a metal electrode in **Xyce** is given by

$$V_{bc} = V_{ckt} + V_{bi} + \Phi_{ms} \tag{2.84}$$

where $V_{ckt}$ is the potential applied by the circuit to the electrode and $V_{bi}$ is the ”built-in” potential of the semiconductor, a function of the semiconductor doping.

Table 2.130: Material workfunction values

| Metal | Symbol | Workfunction, $\Phi_m$ (Volts) |
|---|---|---|
| aluminum | al | 4.10 |
| p+-polysilicon | ppoly | 5.25 |
| n+-polysilicon | npoly | 4.17 |
| molybdenum | mo | 4.53 |
| tungsten | w | 4.63 |
| molybdenum disilicide | modi | 4.80 |
| tungsten disilicide | wdi | 4.80 |
| copper | cu | 4.25 |
| platinum | pt | 5.30 |
| gold | au | 4.80 |

Table 2.131: Electron affinities

| Semiconductor | Symbol | Electron Affinity, $\chi$ (Volts) |
|---|---|---|
| Silicon | si | 4.17 |
| Germanium | ge | 4.00 |
| Galium Arsenide | gaas | 4.07 |
| Silicon Dioxide | sio2 | 0.97 |
| Nitride | nitride | 0.97 |
| Sapphire | sapphire | 0.97 |

## Metal-Oxide-Semiconductor Contacts

To date in **Xyce**, only semiconductor material is included in the PDE solution domain. Metals and oxide materials are only included through boundary conditions. This is an adequate approach for a lot of problems. For some problems (such as modeling of low-dose radiation effects) modeling the oxide in more detail, as a PDE, will become necessary. However, since oxides are usually very thin, compared with the semiconductor domain, meshing both materials as part of the same simulation is difficult. Therefore, incorporating the effects of a gate oxide as part of the gate boundary condition is a reasonable approach.

In the case of a contact to a metal-oxide-semiconductor structure, the separation of the Fermi energies in the metal and the semiconductor at equilibrium is due to two effects: the workfunction difference between the metal and the semiconductor, and the effective interface charge. These two effects cause the bands to bend at the surface in equilibrium. The flatband voltage is the sum of these two terms [42]:

$$V_{FB} = \Phi_{ms} - \frac{Q_i}{C_i} \tag{2.85}$$

where $\Phi_{ms}$ is the metal-semiconductor workfunction difference, $Q_i$ is the value of interface charge (in $C/cm^2$), and $C_i$ is the oxide capacitance per unit area, which is given by

$$C_i = \frac{\epsilon_{ox}\epsilon_0}{x_o} \tag{2.86}$$

The voltage $V_{FB}$ is the amount of bias which, when applied to the gate, causes the electron energy bands to be flat. This is the potential that is added to a boundary node in **Xyce** to account for a metal-oxide-semiconductor barrier. The overall boundary condition for a contact to a metal-oxide-semiconductor structure is given by

$$V_{bc} = V_{ckt} + V_{bi} + \Phi_{ms} - Q_i/C_i \tag{2.87}$$

where $V_{ckt}$ is the potential applied by the circuit and $V_{bi}$ is the ”built-in” potential of the semiconductor.

## NMOS Device

The default NMOS device used in **Xyce** has a substrate doping concentration of $1.0 \times 10^{16}/cm^3$ and an oxide thickness of $1.0 \times 10^{-6}cm$. Since the ideal threshold voltage $V_T$ is given by

$$V_T = 2\phi_F + \frac{\epsilon_s}{\epsilon_{ox}} x_o \sqrt{\frac{2qN_A\phi_F}{\epsilon_s\epsilon_0}} \tag{2.88}$$

$V_T$ is equal to 0.892 V. for this device. Note that

$$\phi_F = \frac{1}{q}[E_i(bulk) - E_F] = \frac{kT}{q} ln(\frac{N_A}{n_i}) \tag{2.89}$$

for a p-type semiconductor substrate and

$$\phi_F = -\frac{kT}{q} ln(\frac{N_D}{n_i}) \tag{2.90}$$

for an n-type substrate.

# 3. Command Line Arguments

**Xyce** supports a handful of command line arguments which must be given *before* the netlist filename. While most of these are intended for general use, others simply give access to new features that, while supported, are not enabled by default. The general usage is as follows:

```
runxyce [arguments] <netlist filename>
```

Table 3.1 gives a list of supported command line options.[1]

Table 3.1: List of **Xyce** command line arguments.

| Argument | Description | Usage | Default |
|---|---|---|---|
| -h | Help option. Prints usage and exits. | `-h` | - |
| -v | Prints the version banner and exits. | `-v` | - |
| -license | Prints the license text and exits. | `-license` | - |
| -capabilities | Prints a list of compiled-in options and exits. | `-capabilities` | - |
| -delim | Set the output file field delimiter. | `-delim <TAB\|COMMA\|string>` | - |
| -o | Place the results into specified file. | `-o <file>` | Results output file name based on netlist file name. |
| -l | Place the log output into specified file. | `-l <file>` | Log output sent to standard out. |
| -r | Output a binary rawfile. | `-r <file>` | No rawfile written. |
| -a | Use with `-r` to output a readable (ascii) rawfile. | `-r <file> -a` | Default rawfile is binary. |
| -nox | Use the NOX nonlinear solver. | `-nox <ON\|OFF>` | on |
| -linsolv | Set the linear solver. | `-linsolv <KLU\|AZTECOO>` | KLU(serial) and AztecOO(parallel) |
| -param | Print a terse summary of model and/or device parameters. | `-param` | - |

[1] Note that the "-h" option might list command line options not present in this table. These extra options are generally deprecated and should not be used. Only the options listed in the table are considered supported features.

Table 3.1: List of **Xyce** command line arguments.

| Argument | Description | Usage | Default |
|---|---|---|---|
| -prf | Specify a file with simulation parameters. | `-prf <filename>` | - |
| -rsf | Specify a file to save simulation responses functions. | `-rsf <filename>` | - |
| -remeasure | Recompute .measure results with existing data. | `-remeasure` | - |
| -syntax | Check netlist syntax then exit. | `-syntax` | - |
| -norun | Check netlist syntax and topology, then exit. | `-norun` | - |
| -maxord | Maximum time integration order. | `-maxord <1..5>` | - |
| -jacobian_test | Jacobian matrix diagnostic. | `-jacobian_test` | - |

A few other command line options are available that are typically only used in Xyce development. For example the options `-param`, `-info`, `-doc` and `-doc_cat` are used to generate the device tables in this guide. The options, `-jacobian_test` and `-namesfile` can be useful in debugging new devices in **Xyce**.

# 4. Runtime Environment

## 4.1 Running **Xyce** in Serial

If **Xyce** was installed from one of Sandia's binary installers, use the `runxyce` script to run serial versions of **Xyce**. This script sets the environment variables, LD_LIRBARY_PATH or DYLD_LIBRARY_PATH, and starts **Xyce**. No additional runtime configuration is necessary, as these binary installers are shipped with the shared libraries they require..

If **Xyce** was built from source and is being run on the machine where it was compiled, then generally no LD_LIBRARY_PATH or DYLD_LIBRARY_PATH settings are required, and so **Xyce** is run directly without a wrapper script. After ensuring that the directory into which **Xyce** was installed is in your PATH variable, one merely executes the code by running the command, `Xyce`.

## 4.2 Running **Xyce** in Parallel

Open MPI must be installed on the host machine. It may be download from

`http://www.open-mpi.org/`. Consult the documentation for help with installation.

Use the `xmpirun` to run parallel versions of **Xyce**. This script sets the environment variables, LD_LIBRARY_PATH or DYLD_LIBRARY_PATH, and starts Xyce using the `mpiexec` wrappers.

If **Xyce** was built from source and is being run on the machine where it was compiled, then generally no LD_LIBRARY_PATH or DYLD_LIBRARY_PATH settings are required, and so **Xyce** is run directly without a wrapper script. After ensuring that the directory into which **Xyce** was installed is in your PATH variable, one merely executes the code by running the command, `mpirun [mpirun options] Xyce [xyce options]`.

## 4.3 Running **Xyce** on Sandia HPC and CEE Platforms

This version of **Xyce** has been installed centrally on Sandia HPC and CEE platforms, and requires metagroup access. Contact the **Xyce** team for details on how to obtain this access.

Once you have registered for metagroup membership, the central installs of **Xyce** may be accessed by a module load.

`module load Xyce` adds all required modules and sets all required environment variables to access the normal version of **Xyce**. `module load XyceRad` does the same thing for the version **Xyce** containing Sandia proprietary models.

`module help Xyce` provides some additional information about what the module does.

Consult the system documentation for help with submitting jobs on these platforms.

`https://computing.sandia.gov/`

# 5. Setting Convergence Parameters for **Xyce**

Because the solution algorithms and methods within **Xyce** are different than those used by other circuit simulation tools (e.g., SPICE), the overall convergence behavior is sometimes different, as are the parameters which control this behavior.

## 5.1 Adjusting Transient Analysis Error Tolerances

**Xyce** uses a variable order trapezoid integration as its default scheme, and this method may also be requested explicitly with the **TIMEINT** option `METHOD=trap` or `METHOD=7`. Trapezoid time-stepping is second order accurate and does not have any numerical dissipation in its local truncation error. Variable order trapezoid integration dynamically uses Backward euler (BE) and trapezoid rule. When `ERROPTION=1` is set with `METHOD=7`, trapezoid rule is used almost exclusively (BE only used at breakpoints). See table 2.3 for details.

**Xyce** also supports a variable order Backward Differentiation Formula (BDF 1-5) time integration method (also known as a 1-5 step Gear method) for performing transient analysis [43]. The BDF integrator is selected by using the **TIMEINT** option `METHOD=BDF` or `METHOD=6`. This method starts out with Backward Euler on the first few steps and then ramps up to as high an order as will maintain stability, and which takes the largest time steps. The maximum order it can attain is five, and this can be reduced with the **MAXORD** option. It is also possible to set a minimum order that the integrator should maintain with the option **MINORD**. When **MINORD** is set, the integrator will move upward in order from Backward Euler as quickly as possible to achieve **MINORD**, and then it will adjust the order between **MINORD** and **MAXORD** to maintain stability and take large steps. See table 2.3 for details.

A third time integration option is the second-order Gear method. It offers some improvements over the BDF implementation, and may be selected with the **TIMEINT** option `METHOD=gear` or `METHOD=8`. See table 2.3 for details.

### 5.1.1 Setting **RELTOL** and **ABSTOL**

In **Xyce**, both the time integration package and the nonlinear solver package have **RELTOL** and **ABSTOL** settings. Some general guidelines for settings parameters are [43]:

- Use the *same* **RELTOL** and **ABSTOL** values for both the **TIMEINT** and the **NONLIN-TRAN .OPTIONS** statements.
- For a conservative approach (i.e., safe), set `RELTOL=1.0E-(`*m*`+1)` where *m* is the desired number of significant digits of accuracy.
- Set **ABSTOL** to the smallest value at which the solution components (either voltage or current) are essentially insignificant.
- Note that the above suggests that **ABSTOL** $<$ **RELTOL**.

The current defaults for these parameters are `ABSTOL=1.0E-6` and `RELTOL = 1.0E-3`. For a complete list of the time integration parameters, see chapter 2.1.

## 5.2 Adjusting Nonlinear Solver Parameters (in transient mode)

In **Xyce**, the nonlinear solver options for transient analysis are set using the `.OPTIONS NONLIN-TRAN` line in a netlist. This subsection gives some guidelines for setting this parameters.

- For guidelines on setting **RELTOL** and **ABSTOL**, see above.
- **RHSTOL** – This is the maximum residual error for each nonlinear solution. **Xyce** uses this as a "safety" check on nonlinear convergence. Typically, `1.0E-2` (the default) works well.
- **DELTAXTOL** – This is the weighted update norm tolerance and is the primary check for nonlinear convergence. Since it is weighted (i.e., normalized using **RELTOL** and **ABSTOL**), a value of `1.0` would give it the same accuracy as the time integrator. For robustness, the default is `0.33` but sometimes a value of `0.1` may help prevent "time-step too small" errors. A value of `0.01` is considered quite small.
- **MAXSTEP** – This is the maximum number of Newton (nonlinear) steps for each nonlinear solve. In transient analysis, the default is `20` but can be increased to help prevent "time-step too small" errors. This is roughly equivalent to **ITL4** in SPICE.

# 6. Quick Reference for Users of Other SPICE Circuit Simulators

This chapter describes many of the differences between **Xyce** and other SPICE-like circuit simulaters. The primary focus is on the difference between Orcad PSpice and **Xyce**, with an eye towards providing the ability for those familiar with using PSpice to begin using **Xyce** quickly.

This chapter is likely not complete, and **Xyce** users might also consult specific sections of this Reference Guide about particular **Xyce** commands. Those sections may have additional information on Xyce's incompatibilities with other circuit simulators, and how to work around them.

## 6.1 Differences Between **Xyce** and PSpice

This section is focused on the differences between **Xyce** and PSpice. However, some of this discussion also applies to other SPICE-like circuit simulators.

### 6.1.1 Command Line Options

Command line arguments are supported in **Xyce** but they are different than those of PSpice. For a complete reference, see Chapter 3.

### 6.1.2 Device Support

Most, but not all, devices commonly found in other circuit simulation tools are supported. **Xyce** also contains enhanced versions of many semiconductor devices that simulate various environmental effects. For the complete list, please see the Analog Device Summary in Table 2.23.

### 6.1.3 Netlist Support

For the specific devices or models that are supported in **Xyce**, most of the standard netlist inputs are the same as those in standard SPICE. However, the **.OPTIONS** command has several additional features used to expose capabilities specific to **Xyce**. In particular, **Xyce** does not support the standard PSpice format **.OPTIONS** line in netlists. Instead, options for each supported package are called according to the following format.

**General Form** `.OPTIONS <pkg> [<tag>=<value>]*`

**Arguments and Options**

`DEVICE`
: Device Model

`TIMEINT`
: Time Integration

`NONLIN`
: Nonlinear Solver

`NONLIN-TRAN`
: Transient Nonlinear Solver

`NONLIN-HB`
: HB Nonlinear Solver

`LOCA`
: Continuation/Bifurcation Tracking

`LINSOL`
: Linear Solver

`LINSOL-HB`
: HB Linear Solver

`OUTPUT`
: Output

`RESTART`
: Restart

`HBINT`
: Harmonic Balance (HB)

`SENSITIVITY`
: Direct and Adjoint sensitivity analysis

For a complete description of the supported options in **Xyce**, see section 2.1.18.

**Xyce** does not support the "**.PROBE**" statement. Output of Probe-format files, in .csd format, that are readable by PSpice is done using the **.PRINT** netlist statement. See section 2.1.23 for the syntax for `FORMAT=PROBE`.

**Xyce** does not support PSpice style abbreviations in the **.PRINT** statement. For example, to print out the value of the voltage at node `A` in a transient simulation you must request `.PRINT TRAN V(A)`, not `.PRINT TRAN A`. **Xyce** also does not support `N()` as a synonym for `V()` on `.PRINT` lines.

### 6.1.4 Converting PSpice ABM Models for Use in **Xyce**

**Xyce** is almost fully compatible with PSpice with respect to analog behavioral models. This includes the `E`, `F`, `G`, and `H` device types. A notable exception to this compatibility is in the use of

lead and device currents in expressions used in controlled source definitions. That feature is not supported in **Xyce**.

### 6.1.5 Usage of .STEP Analysis

The implementation of .STEP in **Xyce** is not the same as that of PSpice. See section 2.1.27 for the syntax and function of the .STEP function in **Xyce**.

#### Global .PARAM Sweeps

PSpice also supports sweeps over variables specified in .PARAM lines. This is not supported in **Xyce**. For example, this block of text will not work in **Xyce**:

```
VAB 2 0 5
VAC 1 0 {variable}
.param variable=0
.step param variable 0 5 1
.dc VAB 4 5 1
```

An equivalent block of code that will work in **Xyce** replaces the `.param` with a `.global_param`, and removes the `param` keyword from the `.step` line:

```
VAB 2 0 5
VAC 1 0 {variable}
.global_param variable=0
.step variable 0 5 1
.dc VAB 4 5 1
```

#### Model Parameter Sweeps

PSpice requires extra keywords to apply a .STEP statement to a model parameter. **Xyce** handles model parameters differently, and is actually somewhat more flexible than PSpice. Unfortunately, this means that the two specifications are not compatible.

A model parameter in PSpice would be handled like this:

```
R1 1 2 RMOD 1
.model RMOD RES(R=30)
.step RES RMOD(R) 30 50 5
```

The equivalent way to specify this in **Xyce** would be:

```
R1 1 2 RMOD 1
.model RMOD RES(R=30)
.step RMOD:R 30 50 5
```

Note that **Xyce** does not require the RES keyword on the .STEP line. In PSpice, this keyword is needed to specify what type of model is being used. **Xyce** actually has more flexibility than PSpice in this regard—any model or instance variable can be set on the .STEP line using the same syntax.

**Example:** `.step D101:IS 1.0e-3 5.0e-3 1.0e-3`

In this example, D101 is the name of a model or instance, and IS is the name of the parameter within that model or instance.

### 6.1.6 Behavioral Digital Devices

There are at least four significant differences. First, the instance line syntax for the **Xyce** digital behavioral devices differs from PSpice. Second, **Xyce** uses one model card for the timing and Input/Output (I/O) characteristics, while PSpice uses separate model cards for timing and I/O characteristics. The model cards also have different parameters. Third, **Xyce**does support the DIGINITSTATE option. However, it has a different default value than in PSpice. So, the DCOP calculations for flip-flops and latches may be different in some cases between **Xyce** and PSpice. Finally, closely spaced input transitions to a gate (e.g., ones spaced by less than the DELAY parameter of the **Xyce** model) may produce different behaviors in **Xyce** and PSpice. Please consult Section 2.3.25 for more details.

### 6.1.7 Power Dissipation

PSpice supports printing the power dissipation of a device via syntax like W(<name>). At this time, not all **Xyce** devices support power calculations. In addition, the **Xyce** results for the FET semiconductor devices (J, M and Z devices) may differ from the PSpice results. Consult the Features Supported by Xyce Device Models table in Section 2.3 and the individual sections on each device for more details. Additional limitations on lead current and power calculations in **Xyce** are given in Section 2.3.3.

Example work-arounds are as follows, using either the node voltage at Node 2 or the lead current through Resistor 2:

```
.DC V1 0 5 1
.param R2VAL=10
V1 1 0 5V
R1 1 2 10
R2 2 0 {R2VAL}
.PRINT DC V(2) {V(2)*V(2)/R2VAL} {I(R2)*I(R2)*R2VAL}
```

### 6.1.8 Dependent Sources with TABLE Syntax

PSpice and **Xyce** have two differences in their syntax for dependent sources that are specified with a TABLE syntax. PSpice might specify:

```
TABLE {EXPR} ((x1,y1) (x2,y2) ... (xn, yn))
```

PSpice tables might also be missing the commas between the value-pairs. For example, this is legal PSpice syntax:

```
TABLE {EXPR} ((x1 y1) (x2 y2) ... (xn yn))
```

The corresponding **Xyce** syntax is as follows, where an extra = and extra commas are needed and the outer parentheses are omitted:

```
TABLE {EXPR}= (x1,y1) (x2,y2) ... (xn, yn)
```

### 6.1.9 MODEL STATEMENTS

In PSpice, some `.MODEL` statements may have commas separating the list of parameters, which causes problems in **Xyce**. A simple workaround is to replace those commas with spaces in the corresponding **Xyce** `.MODEL` statements.

In PSpice, some `.MODEL` statements may not have parentheses surrounding the list of parameters. While Xyce also does not require parentheses in model cards, parentheses are accepted. The only **Xyce** requirement is that if they are used then they must be paired with a left parenthesis before all of the parameters and a right parentheses after all of the parameters. Unmatched parentheses are an error in **Xyce**.

### 6.1.10 .NODESET and .IC Statements

**Xyce** and PSpice differ in their capabilities to handle `.NODESET` and `.IC` statements in subcircuits. See sections 2.1.15 and 2.1.10 for more details.

### 6.1.11 Piecewise Linear Sources

The preferred **Xyce** syntax for PWL sources does not use parentheses or commas within the time-voltage pair listing. See Section 2.3.9 for more details.

The **Xyce** PWL source does not support the PSpice `.IN` format for file input. See Section 2.3.9 for the ASCII text and `.csv` formats supported by **Xyce** for file input.

The **Xyce** repeat `R=<value>` syntax for PWL sources is not compatible with the PSpice `REPEAT` syntax for PWL sources. Some work-arounds are as follows. This PSpice `REPEAT FOREVER` syntax:

```
VPWL1 1 0 PWL REPEAT FOREVER (0,0) (0.5,1) (1,0)
+ ENDREPEAT
```

is equivalent to this **Xyce** syntax:

```
VPWL1 1 0 PWL 0 0 0.5 1 1 0 R=0
```

Similarly, if the PSpice source has its time-voltage pairs in a `.csv` file, and the specified waveform starts at time=0, then this PSpice syntax:

```
VPWL2 2 0 PWL
+ REPEAT FOREVER
+ FILE "data.csv"
+ ENDREPEAT
```

is equivalent to this **Xyce** syntax:

```
VPWL2 2 0 PWL file "data.csv" R=0
```

For more general PSpice `REPEAT` syntaxes, and especially for the PSpice `REPEAT for N` syntax, the user might have to manually duplicate the PSpice waveform in a `.csv` file.

### 6.1.12 Additional differences

Some other differences between **Xyce** and PSpice are described in Table 6.1. Users should also consult Table 6.2, since that table lists more general incompatibilities that span multiple circuit simulators.

Table 6.1: Incompatibilities with PSpice.

| Issue | Comment |
|---|---|
| `.VECTOR`, `.WATCH`, and `.PLOT` output control analysis are not supported. | **Xyce** does not support these commands. |
| `.PZ` analysis is not supported. | **Xyce** does not support this command. |
| `.DISTO` analysis is not supported. | **Xyce** does not support this command. |
| `.TF` analysis is not supported. | **Xyce** does not support this command. |
| `.SENS` analysis is supported, but has a different syntax than PSpice. | The **Xyce** version of `.SENS` requires that the user specify exactly which parameters are the subject of the sensitivity analysis. Additionally, **Xyce** can compute sensitivities in transient as well as the `.DC` case (unlike PSpice). |
| `.NOISE` analysis is supported, but not all devices supported. | The **Xyce** version of `.NOISE` is new enough that not all noise models have been implemented. |
| `.MC` and `.WCASE` statistical analyses are not supported. | **Xyce** does not support these commands. |

| | |
|---|---|
| `.DISTRIBUTION`, which defines a user distribution for tolerances, is not supported. | **Xyce** does not support this command. This command goes along with `.MC` and `.WCASE` statistical analyses, which are also not supported. |
| `.LOADBIAS` and `.SAVEBIAS` initial condition commands are not supported. | **Xyce** does not support these commands. |
| `.ALIASES`, `.ENDALIASES`, are not supported. | **Xyce** does not support these commands. |
| `.STIMULUS` is not supported. | **Xyce** does not support this command. |
| `.TEXT` is not supported. | **Xyce** does not support this command. |
| `.PROBE` does not work | **Xyce** does not support this. Use the `FORMAT=PROBE` option of .PRINT instead. See section 2.1.23 for syntax. |
| `.OP` only produces output in serial | .OP is supported in **Xyce**, but will not produce the extra output normally associated with the .OP statement, if running a parallel build. |
| Pulsed source rise time of zero | A requested pulsed source rise/fall time of zero really is zero in **Xyce**. In other simulators, requesting a zero rise/fall time causes them to use the printing interval found on the tran line. |
| Mutual Inductor Model | Not the same as PSpice. This is a Sandia developed model. |
| `.PRINT` line shorthand | Output variables have to be specified as a V(node) or I(source). Listing the node alone will not work. |
| BSIM3 level | In **Xyce** the BSIM3 level=9. In PSpice the BSIM3 is level=7. |
| Interactive mode | **Xyce** does not have an interactive mode. |
| Time integrator default tolerances | **Xyce** has much tighter default solver tolerances than some other simulators (e.g., PSpice), and thus often takes smaller time steps. As a result, it will often take a greater number of total time steps for a given time interval. To have **Xyce** take time steps comparable to those of PSpice, set the `RELTOL` and `ABSTOL` time integrator options to larger values (e.g., `RELTOL=1.0E-2`, `ABSTOL=1.0E-6`). |
| `.OPTIONS` statements | **Xyce** does not support PSpice style `.OPTION` statements. In **Xyce**, the various packages all (potentially) have their own separate `.OPTIONS` line in the netlist. For a complete description, see section 2.1.18. |
| `DTMAX` | **Xyce** does support a maximum time step-size control on the .tran line, but we discourage its use. The time integration algorithms within **Xyce** use adaptive time-stepping methods that adjust the time-step size according to the activity in the analysis. If the simulator is not providing enough accuracy, the `RELTOL` and `ABSTOL` parameters should be decreased for both the time integration package (`.OPTIONS TIMEINT`) and the transient nonlinear solver package (`.OPTIONS NONLIN-TRAN`). We have found that in most cases specifying the same maximum timestep that PSpice requires for convergence actually slows **Xyce** down by preventing it from taking larger timesteps when the behavior warrants. |

| | |
|---|---|
| .TRAN "UIC" keyword | PSpice requires the use of a keyword UIC on the .TRAN line in order to use initial conditions via IC keywords on instance lines. Doing so also tells PSpice not to perform an operating point calculation. In **Xyce**, UIC is ignored and produces a warning message. **Xyce** always uses initial conditions specified with IC keywords, and the case of inductors and capacitors automatically inserts a fictitious voltage source around the device that guarantees the correct potential drop across the device during the operating point. If the user desires that **Xyce** not perform an operating point calculation, but rather use an initial condition for a transient run of all zero voltages, then the user should specify NOOP instead. |
| Temperature specification | Device temperatures in **Xyce** are specified through the .OPTIONS DEVICE line. PSpice allows a .TEMP line that is not recognized (and is ignored) by **Xyce**. |
| Lead currents for lossless transmission lines | PSpice uses A and B to reference the two terminals of the lossless tranmission line. So, **Xyce** uses I1() and I2(), while PSpice uses IA() and IB() to access the lead currents for the device. |

### 6.1.13 Translating Between PSpice and **Xyce** Netlists

Some internal Sandia users have found the following checklist to be helpful in getting their PSpice netlists to run in **Xyce**. Additional changes may be needed in some cases.

For the .cir file:

- Change .LIB references to point to the modified libraries generated for use with **Xyce**.
- Change PROBE and PROBE64 statements to PRINT <Sim Type>
- Find cases where the PSpice netlist used N() rather than V().
- .PARAM statements need to be replaced with .GLOBAL_PARAM statements in **Xyce**.
- .DC has the keyword PARAM in PSpice. If it exists then remove it in the **Xyce** netlist.
- .OPTIONS TNOM=X is changed to .OPTIONS DEVICE TNOM=X in the **Xyce** netlist.
- .TEMP args does not exist in **Xyce**. The equivalent **Xyce** statement is .STEP TEMP LIST args
- The default time integrator tolerances can make **Xyce** take smaller timesteps on some circuits, and therefore have slower simulation times. The **Xyce** timesteps can be increased at the expense of time integration accuracy by loosening the integrator tolerances. Some users find that .OPTIONS TIMEINT RELTOL=1e-2 ABSTOL=1e-4 leads to time steps more like PSpice's.
- Move any .IC and .NODESET statements to the top-level, and use the fully qualified node names in those statements.

- Adjust the syntax for any PWL sources, if needed, per Section 6.1.11.

For the .lib file:

- Add `LEVEL=2` parameter to diode models.
- Fix the parentheses and comma differences between PSpice and **Xyce**`.MODEL` statements per Section 6.1.9.
- Find and modify any nested expression statements. This may entail replacing "{" with "(" in the expression in the **Xyce** netlist.
- Fix the table syntax for dependent sources, as discussed in Section 6.1.8.

## 6.2 Differences Between **Xyce** and Other SPICE Simulators

This section covers some known differences between **Xyce** and other SPICE-like circuit simulators, besides PSpice, as listed in Table 6.2. However, users of those other simulators (e.g., SPICE3F5, HSPICE, ngspice, ...) should also check the previous subsection on PSpice, since some of that discussion also applies here.

Table 6.2: Incompatibilities with Other Circuit Simulators.

| Issue | Comment |
|---|---|
| `.DC` sweep output. | The `.DC` sweep calculation does not automatically output the sweep variable. Only variables explicitly listed on the `.PRINT` line are output. |
| MOSFET levels. | In **Xyce** the MOSFET levels are not the same. In **Xyce**, a BSIM3 is MOSEFET level 9. Other simulators have different levels for the BSIM3. |
| BSIM SOI v3.2 level. | In **Xyce** the BSIM SOI (v3.2) is MOSFET level 10. Other simulators have different levels for the BSIM SOI. |
| BSIM4 level. | In **Xyce** the BSIM4 is MOSFET levels 14 and 54. Other simulators have different levels for the BSIM4. |
| Syntax for `.STEP` is different. | The manner of specifying a model parameter to be swept is slightly different than in some other simulators. See the **Xyce** Users' and Reference Guides for details. |

| | |
|---|---|
| Switch is not the same as SPICE3F5. | The **Xyce** switches are not compatible with the simple switch implementation in SPICE3F5. The switch in **Xyce** smoothly transitions between the ON and OFF resistances over a small range between the ON and OFF values of the control signal (voltage, current, or control expression). See the **Xyce** Reference Guide for the precise equations that are used to compute the switch resistance from the control signal values. The SPICE3F5 switch has a single switching threshold voltage or current, and RON is used above threshold while ROFF is used below threshold. **Xyce**'s switch is considerably less likely to cause transient simulation failures. Results similar to SPICE3F5 can be obtained by setting VON and VOFF to the same threshold value, but this is not a recommended practice. |
| Piecewise Linear (PWL) source not fully compatible with either HSpice or PSpice. | See Sections 2.3.9 and 6.1.11 of the **Xyce** Reference Guide for more details. |
| Acceptable prefixes in the metric system. | The "atto" prefix, which is designated by "a", is acceptable in HSpice, but is not accepted in **Xyce**. The use of the "atto" prefix in **Xyce** must be replaced with "E-18". |
| Hierarchical parameters. | In **Xyce** hierarchical parameters, `M` (multiply) and `S` (scale), are not commonly supported. The `M` parameter is only supported by the MOSFET models. |
| `.MEASURE` has some incompatibilities and differences with HSpice. | See Section 2.1.13 of the **Xyce** Reference Guide for more details. |
| The `P()` accessor for power may give different results for semiconductor devices (D, J, M, Q and Z devices) and the lossless transmission device (T device) than with HSpice. | See Sections 2.3.8, 2.3.17, 2.3.19, 2.3.16 2.3.23 and 2.3.18 for more details. |
| The **Xyce** `.OP` statement provides less output than other simulators. | See Section 2.1.17 for more details. |
| Initial conditions for lossless and lossy transmission lines | In SPICE3F5 and PSpice, initial conditions can be set on the initial voltages and currents at each end of the lossless transmission line, but not for the lossy transmission line. In **Xyce**, initial conditions can be set on the initial voltages and currents at each end of the lossy transmission line, but not for the lossless transmission line |

| | |
|---|---|
| Use of vgs(Mxxx) style syntax on the .PRINT line | Some SPICE-style circuit simulators can use the `.PRINT` line to (for example) print out the vds, vgb, vsd, etc. values for a PMOS transistor (say, `M1`) using `.PRINT TRAN vgs(M1) vbs(M1) vds(M1)`. This is not directly supported in **Xyce**. See Section 2.3.16 for how this is supported with the `N()` syntax for the BSIM3 and BSIM4 models. For other transistor devices, use something like this on the **Xyce** `.PRINT` line, `V(ng,ns)` where ng and ns are the names of the circuits nodes attached to the gate and source terminals of the transistor. |

# 6.3 DC Operating Point Calculation Failures in **Xyce**

This section discusses various netlist problems that can cause **Xyce** to fail to get a DC Operating Point (DCOP). Some of this discussion is "tutorial" in nature, but helps illustrate the issues.

## 6.3.1 Incompatible Voltage Constraints at Circuit Nodes

The **Xyce** DCOP calculation will fail if the netlist specifies incompatible voltage constraints at a given node in the circuit. This netlist fragment will cause **Xyce** to fail to get a DCOP because the two voltage sources obviously cannot both apply their assigned voltage at `Node1`.

```
VA Node1 0 1
VB Node1 0 2
```

This configuration is also not allowed because there is an infinite number of ways that the two voltage sources can supply current to the rest of the circuit and still maintain the requested voltage.

```
VA Node1 0 1
VB Node1 0 1
```

With those two netlist fragments as background, the next two examples illustrate a "**Xyce**-unique" way that DCOP failure can occur. This happens because initial conditions on capacitors in **Xyce** are enforced with additional voltage sources during the DCOP. So, these two netlist fragments are identical to the two cases given above, and will both cause a DCOP failure in **Xyce**. A similar problem can occur with other **Xyce** devices that allow initial conditions, for voltage drops across the device, to be set.

```
VA node1 0 1
CB node1 0 1.0pf IC=2
```

or

```
VA node1 0 1
CB node1 0 1.0pf IC=1
```

### 6.3.2 Multiple Voltage Constraints From Subcircuits or at Global Nodes

Similar incompatible voltage constraints can be caused by subcircuit definitions, if the subcircuits enforce voltage constraints on one (or more) of their interface nodes. An example netlist fragment is given below. In this example, subcircuits `X1` and `X2` are trying to enforce incompatible constraints at `Node1` in the top-level circuit. This is notionally identical to the first example in the previous subsection. However, these incompatibilities can be harder to find if the subcircuit definitions are located in different library files.

```
X1 node1 0 MySubcircuitA
X2 node1 0 MySubcircuitB
.SUBCKT MYSUBCIRCUITA 1 2
VA 1 0 1
R1A 1 internalNodeA 0.5
R2A internalNodeA 2 0.5
.ENDS
.SUBCKT MYSUBCIRCUITB 3 4
VB 3 0 2
R1B 3 internalNodeB 0.5
R2B internalNodeB 4 0.5
.ENDS
```

Global nodes that have voltage sources applied to them from separate parts of the circuit (e.g, from within subcircuit definitions) can cause yet another version of the DCOP failure modes given in the previous subsection. If these two netlist statements are given in different subcircuit definitions then a **Xyce** DCOP failure will occur.

```
Vpin1 $G_GlobalNode1 0 1
Vpin2 $G_GlobalNode1 0 2
```

Of course, the examples given above can occur in varied combinations.

### 6.3.3 NODESET and IC Statements in Subcircuits

As previously noted, **Xyce** does not support `.NODESET` and `.IC` statements in subcircuits. This is a common cause of DCOP failure in **Xyce** when the same netlist converges in PSpice. See sections 2.1.15 and 2.1.10 for more details on how to move those `.NODESET` and `.IC` statements to the "top-level" in the **Xyce** netlist.

### 6.3.4 No DC Path to Ground for a Current Flow

A **Xyce** DCOP failure can occur if there is no DC path to ground at a node but a current flow must occur. This can happen because of a typographic error during netlist entry. An simple example is as follows, where the netlist line for R1 has 0 (“oh”) rather then 0 (“zero”). It can also happen when all of the current into a subcircuit must flow through capacitors.

```
I1 1 0 1
R1 1 O 1
C1 1 0 2pF
```

### 6.3.5 Inductor Loops

An inductor loop with no DC path to ground will also typically cause a DCOP failure. A simple example is:

```
V1 1 0 1
R1 1 2 1
L1 2 3 2uH
L2 2 3 2uH
R3 3 0 1
```

### 6.3.6 Infinite Slope Transistions

It is possible for a user to specify expressions that could have infinite-slope transitions with B-, E-, F-, G- and H-sources. A common example is IF statements within those source definitions. This can often lead to “timestep too small” errors when Xyce reaches the transition point. In some cases, it can also cause DCOP failures. See Section 2.3.15 and the “Analog Behavioral Modeling” (ABM) chapter of the Xyce Users’ Guide for guidance on using the B-source device and ABM expressions. Those recommendations also apply to the E-, F-, G- and H-sources.

### 6.3.7 Simulation Settings

Automatic source stepping was added to **Xyce** in version 6.3. **Xyce** also automatically does Gmin stepping when the DCOP calculation fails to converge. In addition, the time integration options normally do not affect the DCOP calculation. So, adjusting the simulation settings for **Xyce** typically has no effect on the DCOP calculation. However, if both of the automatic homotopy methods mentioned above do not work, and none of the other netlist issues mentioned above exist, then Xyce does have other homotopy methods available. See the **Xyce** Users Guide [44] for more details.

# 7. Quick Reference for Microsoft Windows Users

**Xyce** is supported on Microsoft Windows. However, the primary targets for **Xyce** are high-performance supercomputers and workstations, which are almost always running a variant of Unix. All of **Xyce** developement is done on Unix platforms. Bearing this in mind, there are occasionally issues with using a Unix application on a Windows platform. Some of these issues are described in the table below.

Table 7.1: Issues for Microsoft Windows.

| Issue | Comment |
|---|---|
| File names are case-sensitive | **Xyce** will expect library files, which are referenced in the netlist, to have exactly the same case as the actual filename. If not, **Xyce** will be unable to find the library file. |
| Windows endline characters are different from other OS's | The characters that mark the end of a line in Windows are a carriage return followed by a Line Feed (`CR+LF`). In Unix-like systems (including Linux and OS X), the character is simply a Line Feed (`LF`). Moving a file between the two systems does not usually cause issues, but users should be aware of the difference in case problems arise. |
| **Xyce** is unable to read proprietary file formats. | Programs such as Microsoft Word by default use file formats that **Xyce** cannot recognize. It is best not to use such programs to create netlists, unless netlists are saved as *.txt files. If you must use a Microsoft editor, it is better to use Microsoft Notepad. In general, the best solution is to use a Unix-style editor, such as Vi, Gvim, or Emacs. |

# 8. Rawfile Format

The rawfile format produced by **Xyce** closely follows SPICE3 conventions. Differences are noted in section 8.3. Details on the both the ASCII and binary formats are provided here for reference.

## 8.1 ASCII Format

The ASCII file format can be created using the `-a` flag on the command line. See Chapter 3 for more information.

The ASCII format standard dictates that the file consist of lines or sets of lines introduced by a keyword. The `Title` and `Date` lines should be the first in the file, and should occur only once. They are followed by the `Plotname`, `Flags`, `No. Variables`, and `No. Points` lines for each plot.

Listed next are sets of `Variables`, and `Values` lines. Let *numvars* be the number of variables (as specified in the `No. Variables` line), and *numpts* be the number of points (as shown on the `No. Points` line). After the `Variables` keyword there must be *numvars* declarations of outputs, and after the `Values` keyword, there must be *numpts* lines, each consisting of *numvars* values.

Finally, **Xyce** also allows for a `Version` line to be placed after the `No. Points` line for compatability with various software programs.

See Table 8.1 for a summary of the above.

Table 8.1: **Xyce** ASCII rawfile format.

| Issue | Comment |
|---|---|
| `Title:` | An arbitrary string describing the circuit. |
| `Date:` | A free-format date string. |
| `Plotname:` | A string describing the analysis type. |
| `Flags:` | A string describing the data type (*real* or *complex*). |
| `No. Variables:` | The number of variables. |
| `No. Points:` | The number of points. |
| `Version:` (optional) | The version of **Xyce** used to generate this output. By default the version is not output in the header. It can be output with the `.options output outputversioninrawfile=true` option. |
| `Variables:` | A newline followed by multiple lines, one for each variable, of the form `[tab] <index> [tab] <name> [tab] <type>`. |

| | |
|---|---|
| `Values:` | A newline followed by multiple lines, for each point and variable, of the form `[tab] <value>` with an integer index preceeding each set of points. Complex values are output as `[tab] <real component>, <imaginary component>` . |

# 8.2 Binary Format

The binary format is similar to the ASCII format, except that strings are null terminated rather than newline terminated. In addition, all the `values` lines are stored in a binary format. The binary storage of real values as double precision floats is architecture specific.

See Table 8.2 for a summary of the binary table format.

Table 8.2: **Xyce** binary rawfile format.

| Issue | Comment |
|---|---|
| `Title:` | An arbitrary string describing the circuit. |
| `Date:` | A free-format date string. |
| `Plotname:` | A string describing the analysis type. |
| `Flags:` | A string describing the data type (*real* or *complex*). |
| `No. Variables:` | The number of variables. |
| `No. Points:` | The number of points. |
| `Version:` (optional) | The version of **Xyce** used to generate this output. By default the version is not output in the header. It can be output with the `.options output outputversioninrawfile=true` option. |
| `Variables:` | A newline followed by multiple lines, one for each variable, of the form `[tab] <index> [tab] <name> [tab] <type>`. |
| `Binary:` | Each real data point is stored contiguously in `sizeof(double)` byte blocks. Complex values are output as real and imaginary components in a block of size `2*sizeof(double)` byte blocks. |

# 8.3 Special Notes

- Complex data points are only output under `AC` analysis.
- `Commands` and `Options` lines are not used.
- Binary header is formatted ASCII.
- **Xyce** can output an optional `Version` line in the header.

# References


[1] Eric R. Keiter, Karthik V. Aadithya, Ting Mei, Thomas V. Russo, Richard L. Schiek, Peter E. Sholander, Heidi K. Thornquist, and Jason C. Verley. Xyce Parallel Electronic Simulator: Users' Guide, Version 6.6. Technical Report SAND2016-11716, Sandia National Laboratories, Albuquerque, NM, 2016.

[2] Orcad PSpice User's Guide. Technical report, Orcad, Inc., 1998.

[3] HSPICE User's Guide. Technical report, Synopsys, Mountain View, California, 2008.

[4] PSPICE A/D Reference Guide. Technical report, Cadence, San Jose, California, 2008.

[5] T. Banwell. Bipolar transistor circuit analysis using the Lamber W-function. *IEEE Transactions on Circuits and Systems*, 47(11):1621–1633, November 2000.

[6] Arthur P. Mattuck. *Introduction to Analysis*. Prentice Hall, Inc., 1999.

[7] H. K. Gummel and H. C. Poon. An integral charge control model of bipolar transistors. *Bell Sys. Techn. J.*, May-June:827–852, 1970.

[8] Colin McAndrew, Mark Dunn, Shahriar Moinian, and Michael Schröter. VBIC95, The Vertical Bipolar Inter-Company Model. *IEEE Journal of Solid-State Circuits*, 31(10):1476–1483, 1996.

[9] Matthias Rudolph. Documentation of the fbh hbt model, 2005.

[10] The SiGe group at Auburn University. Mextram web site, 2015.

[11] T. A. Fjeldly, T. Ytterdal, and M. Shur. *Introduction to Device Modeling and Circuit Simulation*. Wiley InterScience, 1998.

[12] A. S. Grove. *Physics and Technology of Semiconductor Devices*. John Wiley and Sons, Inc., 1967.

[13] P. Antognetti and G. Massobrio. *Semiconductor Device Modeling with SPICE*. McGraw-Hill, 1988.

[14] J.H. Huang, Z.H. Liu, M.C. Jeng, K. Hui, M. Chan, P.K. KO, and C. Hu. BSIM3 Manual. Technical report, Department of Electrical Engineering and Computer Science, University of California, Berkeley, CA 94720.

[15] M. Bucher, C. Lallement, C. Enz, F. Theodoloz, and F. Krummenacher. The EPFL/EKV MOSFET Model Equations for Simulation Technical Report: Model Version 2.6. Technical report, Electonics Laboratories, Swiss Federal Institute of Technology (EPFL), Lausanne, Switzerland, September 1997.

[16] H. Shichman and D. A. Hodges. Modeling and simulation of insulated-gate field-effect transistor switching circuits. *IEEE Journal of Solid-State Circuits*, SC-3:285, September 1968.

[17] A. Vladimirescu and S. Lui. The Simulation of MOS Integrated Circuits using SPICE2. Technical Report Memorandum No. M80/7, February 1980.

[18] B. J. Sheu, D. L. Scharfetter, P.-K. Ko, and M.-C. Jeng. BSIM: Berkeley Short-channel IGFET Model for MOS Transistors. *IEEE Journal of Solid-State Circuits*, SC-22:558–566, August 1987.

[19] J. R. Pierret. A MOS Parameter Extraction Program for the BSIM Model. Technical Report Memorandum No. M84/99 and M84/100, November 1984.

[20] Ping Yang, Berton Epler, and Pallab K. Chatterjee. An investigation of the charge conservation problem for MOSFET circuit simulation. *IEEE Journal of Solid-State Circuits*, SC-18(1), February 1983.

[21] BSIM3v3.1 Manual. Technical report, Department of Electrical Engineering and Computer Science, University of California, Berkeley, CA 94720.

[22] J. C. Bowers and H. A. Neinhaus. SPICE2 Computer Models for HEXFETs. Technical Report Application Note 954A, International Rectifier Corporation, Berkeley, CA 94720.

[23] P. Su, H. Wan, S. Fung, M. Chan, A. Niknejad, and C. Hu. BSIM3SOI3.1 MOSFET MODEL Users' Manual. Technical report, Department of Electrical Engineering and Computer Science, University of California, Berkeley, CA 94720.

[24] P. Su, H. Wan, S. Fung, M. Chan, A. Niknejad, and C. Hu. BSIM3SOI3.2 documentation. Technical report, Department of Electrical Engineering and Computer Science, University of California, Berkeley, CA 94720.

[25] G. Gildenblat, X. Li, W.Wu, H. Wang, A. Jha, R. van Langevelde, G.D.J. Smit, A.J. Scholten, and D.B.M. Klaassen. PSP: An advanced surface-potential-based MOSFET model for circuit simulation. *IEEE Transactions on Electron Devices*, 53(9):1979–1993, 2006.

[26] V. Sriramkumar, N. Paydavosi, J. Duarte, D. Lu, C. Lin, M. Dunga, S. Yao, T. Morshed, A. Niknejad, and C. Hu. BSIM-CMG 107.0.0 Multi-Gate MOSFET Compact Model Technical Manual. Technical report, Department of Electrical Engineering and Computer Science, University of California, Berkeley, CA 94720.

[27] M. Bucher, A. Bazigos, E. Kitonaki, and F. Krummenacher. Recent advances in the EKV3 MOS transistor model. In *NANOTECH 2006, Workshop on Compact Models*, May 2006.

[28] M. Bucher, D. Diamantakos, A. Bazigos, and F. Krummenacher. Design-oriented characterization and parameter extraction methodologies for the EKV3 MOSFET model. In *NANOTECH 2007 Workshop on Compact Modeling*, May 2007.

[29] J.S. Roychowdhury, A.R. Newton, and D.O. Pederson. Algorithms for the transient simulation of lossy interconnect. *IEEE Trans. Computer-Aided Design of Integrated Circuits and Systems*, 13(1), 1994.

[30] Tom Quarles. Spice3f5 Users' Guide. Technical report, University of California-Berkeley, Berkeley, California, 1994.

[31] Abnita Munankarmay and Michael A. Heroux. A comparison of two equivalent real formulations for complex-valued linear systems part 1: Introduction and method. *American Journal of Undergraduate Research*, 1(3), 2002.

[32] Federico Milano. *Power System Modelling and Scripting*. Springer, 2010.

[33] Prabha Kundur. *Power System Stability and Control*. McGraw Hill, 1994.

[34] Shahar Kvatinsky, Keren Talisveyberg, Dmitry Fliterand, Avinoam Kolodny, Uri C. Weiser, and Eby G. Friedman. Models of memristors for spice simulations. *IEEE 27th Convention of Electrical and Electronics Engineers in Israel*, pages 1–5, 2012.

[35] Shahar Kvatinsky, Eby G. Friedman, Avinoam Kolodny, and Uri C. Weiser. Team: Threshold adaptive memristor model. *IEEE Transactions On Circuits And SystemsI*, 60:211–221, January 2013.

[36] Shahar Kvatinsky, Eby G. Friedman, Avinoam Kolodny, and Uri C. Weiser. Generalized memristive device spice model and its application in circuit design. *IEEE Transactions on Computer-Aided Design of Integrated Circuits and Systems*, 32, August 2013.

[37] C. D. Thurmond. The standard thermodynamic function of the formation of electrons and holes in Ge, Si, GaAs, and GaP. *J. Electrochem. Soc.*, 122:1133, 1975.

[38] D.M. Caughey and R.E. Thomas. Carrier mobilities in silicon empirically related to doping and field. *Proc. IEEE*, 55:2192–2193, 1967.

[39] N.D. Arora, J.R. Hauser, and D.J. Roulston. Electron and hole mobilities in silicon as a function of concentration and temperature. *IEEE Transactions on Electron Devices*, ED-29:292–295, 1982.

[40] J.M. Dorkel and Ph. Leturq. Carrier mobilities in silicon semi-empirically related to temperature, doping, and injection level. *Solid-State Electronics*, 24(9):821–825, 1981.

[41] C. Lombardi, S. Manzini, A. Saporito, and M. Vanzi. A physically based mobility model for numerical simulation of nonplanar devices. *IEEE Transactions on Computer-Aided Design*, 7(11):1164–1170, November 1988.

[42] Ben G. Streetman and Sanjay Banerjee. *Solid State Electronic Devices*. Prentice-Hall, Upper Saddle River, New Jersey, 2000.

[43] K.E. Brenan, S.L Campbell, and L.R. Petzold. *Numerical Solution of Initial-Value Problems in Differential-Algebraic Equations*. Society for Industrial and Applied Mathmatics, Philadelphia, 1996.

[44] Eric R. Keiter, Karthik V. Aadithya, Ting Mei, Thomas V. Russo, Richard L. Schiek, Peter E. Sholander, Heidi K. Thornquist, and Jason C. Verley. Xyce Parallel Electronic Simulator: Users' Guide, Version 6.5. Technical Report SAND2016-5197, Sandia National Laboratories, Albuquerque, NM, 2016.

# Index


.RESULT, 99
**Xyce**
    ABSTOL, 517
    RELTOL, 517
    convergence, 517
.AC, 26
.DCVOLT, 29, 36
.FUNC, 33
.GLOBAL_PARAM, 34
.HB, 35
.IC, 36
.INC, 37
.LIB, 38
.MEASURE, 40, 42
.MODEL, 119
.NODESET, 59
.NOISE, 60
.OPTIONS, 62, 520, 525
    DEVICE, 62
    HBINT, 68
    LINSOL-HB, 75
    LINSOL, 73
    LOCA, 72
    NONLIN-TRAN, 69
    NONLIN, 69
    OUTPUT, 75
    RESTART, 76
    SENSITIVITY, 78
    TIMEINT, 64
.OP, 61
.PARAM, 79
.PREPROCESS
    ADDRESISTORS, 82
    REMOVEUNUSED, 81
    REPLACEGROUND, 80
.PRINT, 26, 27, 35, 60, 84, 108
    AC, 26, 90
    DC, 27, 91
    HB, 35, 91
    NOISE, 60, 93
    TRAN, 93, 108
    AC Analysis, 90
    DC Analysis, 91
    Device Parameters and Internal Variables, 97
    Harmonic Balance Analysis, 91
    Homotopy Analysis, 94
    Noise Analysis, 93
    Parameter Stepping, 95
    Transient Analysis, 93
.RESULT, 99
.SAVE, 100
.SENS, 101
.STEP, 103
.SUBCKT, 105, 119
.TRAN, 75, 107
ABSTOL, 64, 70
BPENABLE, 68
DC, 27
EXITSTEP, 68
EXITTIME, 68
MAXSTEP, 70
NLNEARCONV, 65
NLSMALLUPDATE, 65
RELTOL, 64, 70
RESTARTSTEPSCALE, 64
1d pde (level 1)
    device instance parameters, 490
2d pde (level 2)
    device instance parameters, 492

AC analysis, 26
accelerated mass device, 471
Accelerated Mass Devices, 120
algorithm
    time integration, 525

analog behavioral modeling
POLY, 116
polynomial expression, 116
analysis
AC, 26
control parameters, 62
DC, 27, 69
Decade sweeps, 27
Linear sweeps, 27
List Sweeps, 27
Octave sweeps, 27
HB, 35
Noise, 60
op, 61
options, 62
STEP
Decade sweeps, 104
Linear sweeps, 103
List sweeps, 104
Octave sweeps, 104
step, 103
transient, 69, 107, 108
Aztec, 73

behavioral digital
device instance parameters, 462, 467
device model parameters, 462, 467
bias point, 108
bipolar junction transistor
device instance parameters, 173
device model parameters, 174
BJT, 171
operating temperature, 173
bsim-cmg finfet v107.0.0
device instance parameters, 410
device model parameters, 411
bsim-cmg finfet v110.0.0
device instance parameters, 374
device model parameters, 375
bsim3
device instance parameters, 231
device model parameters, 232
bsim3 soi
device instance parameters, 245
device model parameters, 246
bsim4
device instance parameters, 267
device model parameters, 268
bsim6
device instance parameters, 298
device model parameters, 299
bsource, 170

capacitor, 128
device instance parameters, 129
device model parameters, 129
checkpoint, 76
command line, 513
arguments, 513
controlled switch, 453
device model parameters, 454
convergence, 517
current controlled current source, 167
current controlled voltage source, 169
current source
current controlled, 167
independent, 155
nonlinear dependent, 170
voltage controlled, 168

DC analysis, 27, 69
Decade sweeps, 27
Linear sweeps, 27
List sweeps, 27
Octave sweeps, 27
device
ABM device
PSpice equivalent, 520
ACC Devices, 120
accelerated mass devices, 120
analog, 119
analog device summary, 119
B source, 119
bipolar junction transistor (BJT, 120
BJT, 171
bsource, 170
capacitor, 119, 128
controlled switch, 453
current controlled current source, 119, 167
current controlled switch, 120
current controlled voltage source, 119, 169
digital devices, 120, 461
digital devices, Y type, 466
diode, 119, 145
equations, 119
generic switch, 456

independent current source, 119
independent voltage source, 120, 155, 160
inductor, 120, 131
JFET, 120, 204
lossless transmission line, 457
LTRA, 120
ltra, 451
lumped transmission line, 459
memristor, 120
MESFET, 120, 208
MOSFET, 120, 210
mutual inductor, 120
mutualinductor, 133
nodes, 125
nonlinear dependent source, 119
package options, 62
PDE Devices, 120, 489
resistor, 120, 140
subcircuit, 120
transmission line, 120
lossless, 457
lossy, 451
lumped, 459
voltage controlled current source, 119, 168
voltage controlled switch, 120
voltage controlled voltage source, 119, 165
Digital Devices, 120
digital devices, 461
diode, 145
device instance parameters, 147
device model parameters, 147
operating temperature, 145

ekv3 mosfet
device instance parameters, 443
device model parameters, 443
expressions
operators, 110
SPICE functions, 113

fbh hbtx v2.1
device instance parameters, 191
device model parameters, 191

generic switch, 456

harmonic balance analysis, 35

ideal transmission line
device instance parameters, 457
illegal characters, 126
independent voltage source, 155, 160
inductor, 131
device instance parameters, 132
device model parameters, 132
initial condition, 29, 36, 59
DCVOLT, 29, 36
IC, 36
NODESET, 59

JFET, 204
jfet
device instance parameters, 205, 206
device model parameters, 205, 206
juncap200 diode
device instance parameters, 148
device model parameters, 148

Lambert-W Function, 63
lead currents, 86, 127
legal characters, 126
level parameter, 56
lossless transmission line, 457
lossy transmission line, 451
device model parameters, 451
lumped transmission line, 459
device instance parameters, 459
device model parameters, 459

measure
error measure, 54
additional examples, 52
HSpice compatibility, 54
measurement output, 48
measurement windows, 48
Re-Measure, 49
suppressing measure output, 53
unsupported types, 54
memristor, 484
memristorteam
device instance parameters, 485
device model parameters, 485
memristoryakopcic
device instance parameters, 486
device model parameters, 486
MESFET, 208
mesfet
device instance parameters, 209

device model parameters, 209
mextram 504.12.1
device instance parameters, 193
device model parameters, 193
mextram 504.12.1 with self heating
device instance parameters, 197
device model parameters, 197
Microsoft Windows, 532
model
definition, 56
level parameter, 56
model interpolation, 56
tempmodel, 56
MOSFET, 210
mosfet level 1
device instance parameters, 223
device model parameters, 223
mosfet level 2
device instance parameters, 225
device model parameters, 225
mosfet level 3
device instance parameters, 227
device model parameters, 227
mosfet level 6
device instance parameters, 229
device model parameters, 229
mutualinductor, 133
B-H loop calculations, 138
Converting nonlinear to linear mutual indcutors, 139
mutual inductor equations, 137
mvs etsoi 2.0.0
device model parameters, 441
mvs hemt 2.0.0
device model parameters, 441

netlist
commands, 26
comment, 109
expression operators, 110
functions, 113
in-line comment, 109
line continuation, 109
model definition, 119
nodes, 125
reference, 25
subcircuit, 119
Noise analysis, 60
nonlinear mutual inductor
device model parameters, 134

Operating Point, 27
operating point analysis, 61
output
control, 40
save, 100

parallel
computing, 21
parameters
convergence, 517
PDE Devices, 120, 489
doping parameters, 493
electrode parameters, 494
instance parameters, 493
Physical Models, 496
time integration parameters, 68
POLY, 116
power calculations, 127
power grid, 472
power mosfet
device instance parameters, 294
device model parameters, 294
powergridbranch
device instance parameters, 473
powergridbusshunt
device instance parameters, 475
powergridgenbus
device instance parameters, 479
powergridtransformer
device instance parameters, 477
psp102va legacy mosfet 102.5
device instance parameters, 328
device model parameters, 329
psp103va mosfet
device instance parameters, 341
device model parameters, 342
PSpice, 519, 524, 527
`E` device, 520
`F` device, 520
`G` device, 520
`H` device, 520
Probe, 85

rawfile, 533
ASCII, 533
binary, 534

resistor, 140
device instance parameters, 142, 143
device model parameters, 142, 143
restart, 76
file, 77
two-level, 78
results
measure, 42
output control, 40
output options, 75
print, 26, 27, 35, 60, 84, 108
sens, 101

Sandia National Laboratories, 21
save operating point conditions, 100
sensitivity, 101
solvers
continuation
options, 71, 72
control parameters, 62
hb
options, 68
homotopy
options, 71
linear
Aztec, 73
iterative (preconditioned Krylov methods), 73
options, 73, 75
sparse-direct, 73
Trilinos, 73
nonlinear
options, 69, 518
nonlinear-transient
options, 71
sensitivity
options, 78
sensitivty
options, 78
time integration
options, 517
time integration, 108, 525
options, 64, 68
STEP analysis
Decade sweeps, 104
Linear sweeps, 103
List sweeps, 104
Octave sweeps, 104
step parametric analysis, 103
subcircuit, 105, 488
designation, 106
name, 105
nesting, 106
node zero, 106
scoping, 106

TCAD Devices, 489
Physical Models, 496
time integration parameters, 68
time step
size, 108, 525
transient analysis, 69, 107
error tolerances, 517
Trilinos, 73

Unix, 22
Users of PSpice, 519
Users of Xyce on Microsoft Windows, 532

vbic 1.3 3t
device instance parameters, 182
device model parameters, 183
vbic 1.3 4t
device instance parameters, 182
device model parameters, 187
vbic 3t et cf v1.2
device instance parameters, 178
device model parameters, 178
voltage controlled current source, 168
voltage controlled voltage source, 165
Voltage Nodes, 125
voltage source
current controlled, 169
independent, 160
nonlinear dependent, 170
voltage controlled, 165

Y type digital devices, 466

DISTRIBUTION:

1 MS 0899 Technical Library, 9536

Sandia National Laboratories